BS ISO 22496:2021

BSI Standards Publication

Windows and pedestrian doors — Vocabulary

Documents
Document Sharing Hub

Full document details: BS ISO 22496:2021

National foreword

This British Standard is the UK implementation of ISO 22496:2021.

The UK participation in its preparation was entrusted to Technical Committee B/538/1, Windows and doors.

A list of organizations represented on this committee can be obtained on request to its committee manager.

Contractual and legal considerations

This publication has been prepared in good faith, however no representation, warranty, assurance or undertaking (express or implied) is or will be made, and no responsibility or liability is or will be accepted by BSI in relation to the adequacy, accuracy, completeness or reasonableness of this publication. All and any such responsibility and liability is expressly disclaimed to the full extent permitted by the law.

This publication is provided as is, and is to be used at the recipient's own risk.

The recipient is advised to consider seeking professional guidance with respect to its use of this publication.

This publication is not intended to constitute a contract. Users are responsible for its correct application.

© The British Standards Institution 2021
Published by BSI Standards Limited 2021

ISBN 978 0 539 03767 8

ICS 01.040.91; 91.060.50

Compliance with a British Standard cannot confer immunity from legal obligations.

This British Standard was published under the authority of the Standards Policy and Strategy Committee on 31 October 2021.

Amendments/corrigenda issued since publication

Date	Text affected

Documents
Document Sharing Hub

Full document details: BS ISO 22496:2021

INTERNATIONAL STANDARD

ISO 22496

First edition
2021-10

Windows and pedestrian doors — Vocabulary

Fenêtres et portes piétonnes — Vocabulaire

Reference number
ISO 22496:2021(E)

Documents
Document Sharing Hub

© ISO 2021

Full document details: BS ISO 22496:2021

COPYRIGHT PROTECTED DOCUMENT

© ISO 2021

All rights reserved. Unless otherwise specified, or required in the context of its implementation, no part of this publication may be reproduced or utilized otherwise in any form or by any means, electronic or mechanical, including photocopying, or posting on the internet or an intranet, without prior written permission. Permission can be requested from either ISO at the address below or ISO's member body in the country of the requester.

ISO copyright office
CP 401 • Ch. de Blandonnet 8
CH-1214 Vernier, Geneva
Phone: +41 22 749 01 11
Email: copyright@iso.org
Website: www.iso.org

Published in Switzerland

© ISO 2021 – All rights reserved

Documents
Document Sharing Hub

Full document details: BS ISO 22496:2021

Contents

Page

Foreword ..... **iv**

1 Scope **1**

2 Normative references **1**

3 Terms and definitions **1**

3.1 Terms related to windows 2

3.2 Terminology for pedestrian doors 10

Annex A (informative) **Figures for windows** **20**

Annex B (informative) **Figures for pedestrian doors** **37**

Bibliography **42**

© ISO 2021 – All rights reserved

Documents
Document Sharing Hub

Full document details: BS ISO 22496:2021

Foreword

ISO (the International Organization for Standardization) is a worldwide federation of national standards bodies (ISO member bodies). The work of preparing International Standards is normally carried out through ISO technical committees. Each member body interested in a subject for which a technical committee has been established has the right to be represented on that committee. International organizations, governmental and non-governmental, in liaison with ISO, also take part in the work. ISO collaborates closely with the International Electrotechnical Commission (IEC) on all matters of electrotechnical standardization.

The procedures used to develop this document and those intended for its further maintenance are described in the ISO/IEC Directives, Part 1. In particular, the different approval criteria needed for the different types of ISO documents should be noted. This document was drafted in accordance with the editorial rules of the ISO/IEC Directives, Part 2 (see www.iso.org/directives).

Attention is drawn to the possibility that some of the elements of this document may be the subject of patent rights. ISO shall not be held responsible for identifying any or all such patent rights. Details of any patent rights identified during the development of the document will be in the Introduction and/or on the ISO list of patent declarations received (see www.iso.org/patents).

Any trade name used in this document is information given for the convenience of users and does not constitute an endorsement.

For an explanation of the voluntary nature of standards, the meaning of ISO specific terms and expressions related to conformity assessment, as well as information about ISO's adherence to the World Trade Organization (WTO) principles in the Technical Barriers to Trade (TBT), see www.iso.org/iso/foreword.html.

This document was prepared by Technical Committee ISO/TC 162, *Doors, windows and curtain walling*.

This first edition cancels and replaces the first edition of ISO 1804:1972, which has been technically revised.

Any feedback or questions on this document should be directed to the user's national standards body. A complete listing of these bodies can be found at www.iso.org/members.html.

© ISO 2021 – All rights reserved
Documents
Document Sharing Hub
Full document details: BS ISO 22496:2021

Windows and pedestrian doors — Vocabulary

1 Scope

This document specifies general terminology for windows and pedestrian doors.

2 Normative references

There are no normative references in this document.

3 Terms and definitions

For the purposes of this document, the following terms and definitions apply.

ISO and IEC maintain terminological databases for use in standardization at the following addresses:

— ISO Online browsing platform: available at https://www.iso.org/obp

— IEC Electropedia: available at https://www.electropedia.org/

© ISO 2021 – All rights reserved

Documents
Document Sharing Hub
Full document details: BS ISO 22496:2021

3.1 Terms related to windows

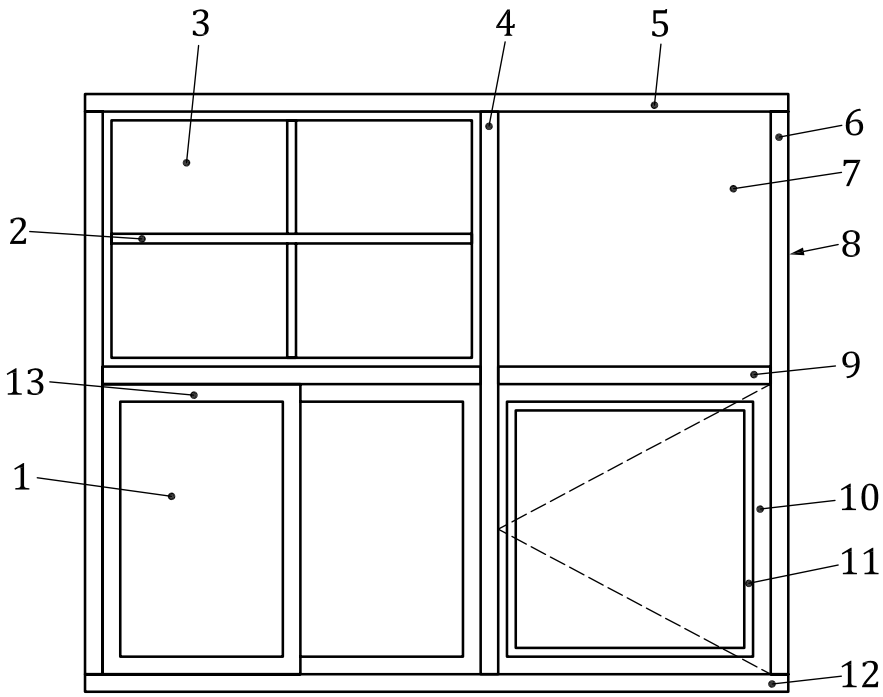

Key

1 sash
2 glazing bar
3 fixed window
4 mullion
5 head
6 frame
7 fixed light
8 jamb
9 transom
10 casement
11 glazing bead
12 sill
13 top rail

Figure 1 — Overview window component

Note 1 to entry: See Annex A for opening functions of windows.

3.1.1
active sash or active casement
sash/casement of a multi-light window, intended to be moved first to provide opening

Note 1 to entry: See Figure 2.

© ISO 2021 – All rights reserved
Documents
Document Sharing Hub
Full document details: BS ISO 22496:2021

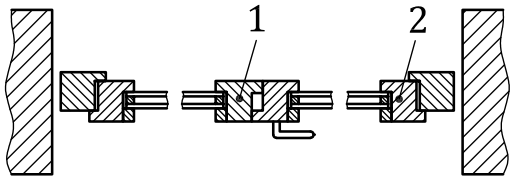

Key

1 passive casement

2 active casement

Figure 2 — Active sash or active casement

3.1.2
bottom rail
horizontal component at the bottom of a sash/casement

3.1.3
bonded glazing
type of window where the glass is primarily retained by a perimeter sealant and maybe with a supplementary mechanical restraint

3.1.4
casement
opening element of a hinged or pivoted window

Note 1 to entry: See also Annex A for opening functions of windows.

Note 2 to entry: See Figure 1 and Figure 9.

3.1.5
casement window
building component for closing an opening in a wall or roof with a hinged or pivoted opening element that may admit light and/or provide ventilation

3.1.6
closed
state where the movable parts rest in or at the fixed part in a way in which they may be fastened (latched and/or locked)

3.1.7
coupled window
window where casements in at least two levels are operated by one action, but can be disconnected for specific purposes such as maintenance or cleaning

Note 1 to entry: See Figure 3.

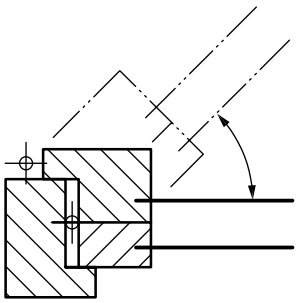

Figure 3 — Coupled window

© ISO 2021 – All rights reserved

Documents
Document Sharing Hub
Full document details: BS ISO 22496:2021

3.1.8
daylight opening width/height
any area in the building envelope that is capable of admitting daylight to an interior

3.1.9
direct glazing
glazing sealed to a casement frame which, when the casement is closed, is linearly mounted on at least two edges

Note 1 to entry: See A.3.

3.1.10
direction of rotation
movement of a hinged or pivoted casement window around its fixing, either clockwise or counter-clockwise

Note 1 to entry: See Figure 4.

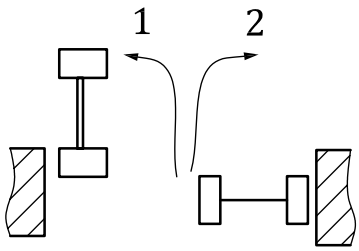

Key

1 direction of rotation – counter-clockwise

2 direction of rotation – clockwise

Figure 4 — Direction of rotation

3.1.11
door height window
french window
casement door
window which extends to floor level and allows access or passage for persons

3.1.12
double window
window with casements in at least two layers that operate independently

Note 1 to entry: See Figure 5.

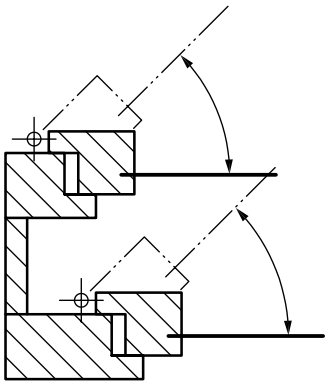

Figure 5 — Double window

© ISO 2021 – All rights reserved
Documents
Document Sharing Hub
Full document details: BS ISO 22496:2021

3.1.13
fanlight
infill panel of glass or translucent material fitted within a window frame, above the moving sash(es)/casement(s) and with a solid member (transom) between it and the moving part(s)

Note 1 to entry: See Figure 6.

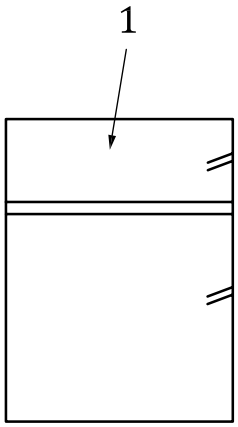

Key
1 fanlight

Figure 6 — Fanlight

3.1.14
fastened
state where the movable part is restrained at one or more points

3.1.15
fixed light
window with infill fitted directly into the frame

Note 1 to entry: In some countries the term fixed light is used for fixed window.

Note 2 to entry: See Figure 1 and Figure A.1 a).

3.1.16
fixed window
window with infill mounted in a sash or casement construction but which differs from an openable window only in that the hardware used does not permit the sash/casement to be opened on a regular basis but holds the sash/casement to the frame

Note 1 to entry: A fixed window contains all the gaskets that an openable window does and these can be replaced by dismantling the sash or casement from the frame.

Note 2 to entry: See Figure 1 and Figure A.1 b).

3.1.17
frame
component forming the perimeter of a window, enabling it to be fixed to the building structure

Note 1 to entry: See Figure 1 and Figure 7 and Figure 9.

© ISO 2021 – All rights reserved

Documents
Document Sharing Hub
Full document details: BS ISO 22496:2021

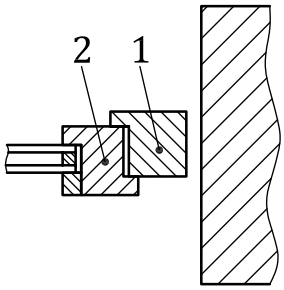

Key

1 frame

2 casement or sash

Figure 7 — Frame

3.1.18
glazing
transparent or translucent infill, together with all the components required to hold it within a frame

3.1.19
glazing bar
member subdividing the glazed area into smaller panes, either physically (Georgian bar) or visually (cross- or attached bar)

Note 1 to entry: See A.2 for different types of glazing bar.

Note 2 to entry: See Figure 2.

3.1.20
glazing bead
section retaining infill within its frame

Note 1 to entry: Term "glazing stop" is also used in some countries when the infill is glass.

Note 2 to entry: See Figure 1.

3.1.21
head
top horizontal member of a window frame

Note 1 to entry: See Figure 1.

3.1.22
infill
panel of transparent or opaque material or combination of materials

3.1.23
interlocking stile
stile that is one of a pair of stiles that are designed to engage with each other in the closed position for sliding products

3.1.24
jamb
vertical side member of a window frame

Note 1 to entry: See Figure 1.

© ISO 2021 – All rights reserved
Documents
Document Sharing Hub
Full document details: BS ISO 22496:2021

3.1.25
latched
movable part is returned to its closed position and restrained by either a) a self-engaging fastener or b) a roller catch or c) a latch

Note 1 to entry: Latched is one of the fastened closing conditions (see 3.1.14).

3.1.26
locked
movable part is further restrained in the closed position by additional operations (of e.g. handle, key, automatic devices or electronic devices) to engage integrated locking devices (e.g. nutbolts or deadbolts) which will affect the product's characteristics

Note 1 to entry: Locked is one of the fastened closing conditions (see 3.1.14).

3.1.27
mullion
vertical or inclined component which subdivides a frame into sashes/casements or connects two frames

Note 1 to entry: See Figure 1.

3.1.28
passive sash
passive casement
sash/casement of a multi-light window, intend to be moved after the active sash/casement

Note 1 to entry: See Figure 2.

3.1.29
pivot window
window that opens by pivoting either horizontally or vertically

Note 1 to entry: See A.1.2 for different types of pivot window.

3.1.30
rebate
recess in a frame, into which a moving element fits

Note 1 to entry: See Figure 8.

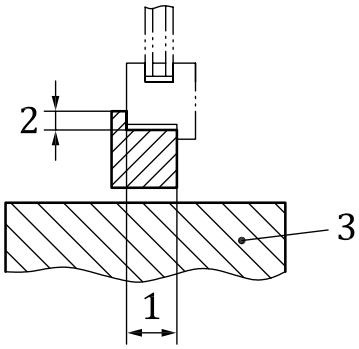

Key

1 rebate "*R*"
2 rebate "*r*"
3 wall

Figure 8 — Rebate

© ISO 2021 – All rights reserved

Documents
Document Sharing Hub
Full document details: BS ISO 22496:2021

Note 2 to entry: A rebate has two measurements, "*r*" the width of the rebate measured in the same plane as the width of the casement and "*R*" the depth of the rebate measured in the same plane as the thickness of the moving element.

Note 3 to entry: See B.2 for examples of different types of rebate.

3.1.31
ribbon window
two or more windows which are attached to each other (either horizontally or vertically) without supporting structure between them

3.1.32
roof window
skylight
window intended for installation in a roof. Roof windows/ Skylights have the same characteristics as windows installed in walls with regard to function, cleaning, maintenance and durability

3.1.33
sash
opening element of a sliding window

Note 1 to entry: See Figure 1 and Figure 7.

3.1.34
screen
assembly of two or more windows and/or doorsets in one plane, with or without separate frames

3.1.35
secured
any action(s) which prevent unauthorised release of the fastening device(s) to allow exit or entry (e.g. child safety, burglary)

3.1.36
sill
bottom member of a window frame

Note 1 to entry: See Figure 1.

3.1.37
single window
window with casement or sash in only one layer

Note 1 to entry: See Figure 9.

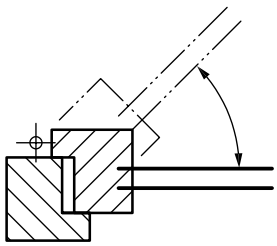

Key

1 sash/casement

2 frame

Figure 9 — Single window

© ISO 2021 – All rights reserved
Documents
Document Sharing Hub
Full document details: BS ISO 22496:2021

3.1.38
sliding window
window with one or more sashes where at least one slides either horizontally or vertically

3.1.39
stile
vertical edge member of a sash/casement

3.1.40
top rail
uppermost horizontal member of a sash/casement

Note 1 to entry: See Figure 1.

3.1.41
transom
horizontal component which subdivides a frame into sashes/casements or fixed lights

Note 1 to entry: See Figure 1.

3.1.42
window
building component or multiple components for closing an opening in a wall or roof that may admit light and/or provide ventilation

Note 1 to entry: See Figure 1.

© ISO 2021 – All rights reserved

Documents
Document Sharing Hub
Full document details: BS ISO 22496:2021