BS ISO 22641:2012

BSI Standards Publication

Space data and information transfer systems — TM (telemetry) synchronization and channel coding

bsi.

...making excellence a habit.™

Document Sharing Hub

National foreword

This British Standard is the UK implementation of ISO 22641:2012. It supersedes BS ISO 22641:2005 which is withdrawn.

The UK participation in its preparation was entrusted to Technical Committee ACE/68/-/7, Space systems and operations - Space data and information transfer systems.

A list of organizations represented on this committee can be obtained on request to its secretary.

This publication does not purport to include all the necessary provisions of a contract. Users are responsible for its correct application.

© The British Standards Institution 2012. Published by BSI Standards Limited 2012

ISBN 978 0 580 76896 5

ICS 49.140

Compliance with a British Standard cannot confer immunity from legal obligations.

This British Standard was published under the authority of the Standards Policy and Strategy Committee on 31 July 2012.

Amendments issued since publication

Date	Text affected

Documents
Document Sharing Hub

Full document details: BS ISO 22641:2012

INTERNATIONAL STANDARD

ISO 22641

Second edition
2012-07-15

Space data and information transfer systems — TM (telemetry) synchronization and channel coding

Systèmes de transfert des informations et données spatiales — Synchronisation TM (télémesure) et codage de canal

Reference number
ISO 22641:2012(E)

Documents
Document Sharing Hub

© ISO 2012

Full document details: BS ISO 22641:2012

COPYRIGHT PROTECTED DOCUMENT

© ISO 2012

All rights reserved. Unless otherwise specified, no part of this publication may be reproduced or utilized in any form or by any means, electronic or mechanical, including photocopying and microfilm, without permission in writing from either ISO at the address below or ISO's member body in the country of the requester.

ISO copyright office
Case postale 56 • CH-1211 Geneva 20
Tel. + 41 22 749 01 11
Fax + 41 22 749 09 47
E-mail copyright@iso.org
Web www.iso.org

Published in Switzerland

Documents
Document Sharing Hub
© ISO 2012 – All rights reserved

Full document details: BS ISO 22641:2012

Foreword

ISO (the International Organization for Standardization) is a worldwide federation of national standards bodies (ISO member bodies). The work of preparing International Standards is normally carried out through ISO technical committees. Each member body interested in a subject for which a technical committee has been established has the right to be represented on that committee. International organizations, governmental and non-governmental, in liaison with ISO, also take part in the work. ISO collaborates closely with the International Electrotechnical Commission (IEC) on all matters of electrotechnical standardization.

International Standards are drafted in accordance with the rules given in the ISO/IEC Directives, Part 2.

The main task of technical committees is to prepare International Standards. Draft International Standards adopted by the technical committees are circulated to the member bodies for voting. Publication as an International Standard requires approval by at least 75 % of the member bodies casting a vote.

Attention is drawn to the possibility that some of the elements of this document may be the subject of patent rights. ISO shall not be held responsible for identifying any or all such patent rights.

ISO 22641 was prepared by the Consultative Committee for Space Data Systems (CCSDS) (as CCSDS 131.0-B-2, August 2011) and was adopted (without modifications except those stated in Clause 2 of this International Standard) by Technical Committee ISO/TC 20, *Aircraft and space vehicles*, Subcommittee SC 13, *Space data and information transfer systems*.

This second edition cancels and replaces the first edition (ISO 22641:2005), which has been technically revised.

© ISO 2012 – All rights reserved

Documents
Document Sharing Hub
Full document details: BS ISO 22641:2012

Documents
Document Sharing Hub

INTERNATIONAL STANDARD ISO 22641:2012(E)

Space data and information transfer systems — TM (telemetry) synchronization and channel coding

1 Scope

1.1 This International Standard specifies synchronization and channel coding schemes for use with the TM Space Data Link Protocol (according to ISO 22645:2005) or the AOS Space Data Link Protocol (according to ISO 22666:2007), which are intended to be used over space-to-ground or space-to-space communications links by space missions.

1.2 This International Standard defines synchronization and channel coding schemes in terms of

a) the services provided to the users of this specification,

b) data formats, and

c) the procedures performed to generate and process the data formats.

1.3 This International Standard does not specify

a) individual implementations or products,

b) the methods or technologies required to perform the procedures, or

c) the management activities required to configure and control the system.

1.4 The scope and field of application are furthermore detailed in subclauses 1.2 and 1.3 of the enclosed CCSDS publication.

2 Requirements

Requirements are the technical recommendations made in the following publication (reproduced on the following pages), which is adopted as an International Standard:

CCSDS 131.0-B-2, August 2011, *TM synchronization and channel coding*.

For the purposes of international standardization, the modifications outlined below shall apply to the specific clauses and paragraphs of publication CCSDS 131.0-B-2.

Pages i to v

This part is information which is relevant to the CCSDS publication only.

© ISO 2012 – All rights reserved

Documents
Document Sharing Hub
Full document details: BS ISO 22641:2012

Page 1-5

Add the following information to the reference indicated:

[1] Document CCSDS 132.0-B-1, September 2003, is equivalent to ISO 22645:2005.

[2] Document CCSDS 732.0-B-2, July 2006, is equivalent to ISO 22666:2007.

Page E-1

Add the following information to the reference indicated:

[E2] Document CCSDS 101.0-B-6, October 2002, is equivalent to ISO 11754:2003[1)] .

3 Revision of publication CCSDS 131.0-B-2

It has been agreed with the Consultative Committee for Space Data Systems that Subcommittee ISO/TC 20/SC 13 will be consulted in the event of any revision or amendment of publication CCSDS 131.0-B-2. To this end, NASA will act as a liaison body between CCSDS and ISO.

1) Withdrawn.

Documents
Document Sharing Hub
© ISO 2012 – All rights reserved
Full document details: BS ISO 22641:2012

The Consultative Committee for Space Data Systems

Recommendation for Space Data System Standards

TM SYNCHRONIZATION AND CHANNEL CODING

RECOMMENDED STANDARD

CCSDS 131.0-B-2

BLUE BOOK

August 2011

Documents
Document Sharing Hub

© ISO 2012 – All rights reserved
Full document details: BS ISO 22641:2012

Documents
Document Sharing Hub

Full document details: BS ISO 22641:2012

AUTHORITY

Issue:	Recommended Standard, Issue 2
Date:	August 2011
Location:	Washington, DC, USA

This document has been approved for publication by the Management Council of the Consultative Committee for Space Data Systems (CCSDS) and represents the consensus technical agreement of the participating CCSDS Member Agencies. The procedure for review and authorization of CCSDS documents is detailed in the *Procedures Manual for the Consultative Committee for Space Data Systems*, and the record of Agency participation in the authorization of this document can be obtained from the CCSDS Secretariat at the address below.

This document is published and maintained by:

CCSDS Secretariat
Space Communications and Navigation Office, 7L70
Space Operations Mission Directorate
NASA Headquarters
Washington, DC 20546-0001, USA

© ISO 2012 – All rights reserved
Full document details: BS ISO 22641:2012
Documents
Document Sharing Hub

STATEMENT OF INTENT

The Consultative Committee for Space Data Systems (CCSDS) is an organization officially established by the management of its members. The Committee meets periodically to address data systems problems that are common to all participants, and to formulate sound technical solutions to these problems. Inasmuch as participation in the CCSDS is completely voluntary, the results of Committee actions are termed **Recommended Standards** and are not considered binding on any Agency.

This **Recommended Standard** is issued by, and represents the consensus of, the CCSDS members. Endorsement of this **Recommendation** is entirely voluntary. Endorsement, however, indicates the following understandings:

- Whenever a member establishes a CCSDS-related **standard**, this **standard** will be in accord with the relevant **Recommended Standard**. Establishing such a **standard** does not preclude other provisions which a member may develop.
- Whenever a member establishes a CCSDS-related **standard**, that member will provide other CCSDS members with the following information:
  - The **standard** itself.
  - The anticipated date of initial operational capability.
  - The anticipated duration of operational service.
- Specific service arrangements shall be made via memoranda of agreement. Neither this **Recommended Standard** nor any ensuing **standard** is a substitute for a memorandum of agreement.

No later than five years from its date of issuance, this **Recommended Standard** will be reviewed by the CCSDS to determine whether it should: (1) remain in effect without change; (2) be changed to reflect the impact of new technologies, new requirements, or new directions; or (3) be retired or canceled.

In those instances when a new version of a **Recommended Standard** is issued, existing CCSDS-related member standards and implementations are not negated or deemed to be non-CCSDS compatible. It is the responsibility of each member to determine when such standards or implementations are to be modified. Each member is, however, strongly encouraged to direct planning for its new standards and implementations towards the later version of the Recommended Standard.

Documents
Document Sharing Hub

Full document details: BS ISO 22641:2012
© ISO 2012 – All rights reserved

FOREWORD

This document is a technical Recommended Standard for use in developing synchronization and channel coding systems and has been prepared by the Consultative Committee for Space Data Systems (CCSDS). The synchronization and channel coding concept described herein is intended for missions that are cross-supported between Agencies of the CCSDS.

This Recommended Standard establishes a common framework and provides a common basis for the synchronization and channel coding schemes to be used by space missions with the TM or AOS Space Data Link Protocol (references [1] or [2]) over space-to-ground and space-to-space communications links. This Recommended Standard was developed by consolidating the specifications regarding synchronization and channel coding in older CCSDS Recommended Standards (references [E2] and [E3]).

This Recommended Standard does not change the major technical contents defined in references [E2] and [E3], but the presentation of the specification has been changed so that:

a) these schemes can be used to transfer any data over any space link in either direction;

b) all CCSDS space link protocols are specified in a unified manner;

c) the layered model matches the Open Systems Interconnection (OSI) Basic Reference Model (reference [3]).

Together with the change in presentation, a few technical specifications in references [E2] and [E3] have been changed in order to define all Space Data Link Protocols in a unified way. Also, some technical terms in references [E2] and [E3] have been changed in order to unify the terminology used in all the CCSDS Recommended Standards that define space link protocols and to define these schemes as general communications schemes. These changes are listed in annex H of this Recommended Standard.

Through the process of normal evolution, it is expected that expansion, deletion, or modification of this document may occur. This Recommended Standard is therefore subject to CCSDS document management and change control procedures, which are defined in the *Procedures Manual for the Consultative Committee for Space Data Systems*. Current versions of CCSDS documents are maintained at the CCSDS Web site:

http://www.ccsds.org/

Questions relating to the contents or status of this document should be addressed to the CCSDS Secretariat at the address indicated on page i.

Documents
Document Sharing Hub
© ISO 2012 – All rights reserved
Full document details: BS ISO 22641:2012

At time of publication, the active Member and Observer Agencies of the CCSDS were:

Member Agencies

- Agenzia Spaziale Italiana (ASI)/Italy.
- Canadian Space Agency (CSA)/Canada.
- Centre National d'Etudes Spatiales (CNES)/France.
- China National Space Administration (CNSA)/People's Republic of China.
- Deutsches Zentrum für Luft- und Raumfahrt e.V. (DLR)/Germany.
- European Space Agency (ESA)/Europe.
- Federal Space Agency (FSA)/Russian Federation.
- Instituto Nacional de Pesquisas Espaciais (INPE)/Brazil.
- Japan Aerospace Exploration Agency (JAXA)/Japan.
- National Aeronautics and Space Administration (NASA)/USA.
- UK Space Agency/United Kingdom.

Observer Agencies

- Austrian Space Agency (ASA)/Austria.
- Belgian Federal Science Policy Office (BFSPO)/Belgium.
- Central Research Institute of Machine Building (TsNIIMash)/Russian Federation.
- China Satellite Launch and Tracking Control General, Beijing Institute of Tracking and Telecommunications Technology (CLTC/BITTT)/China.
- Chinese Academy of Sciences (CAS)/China.
- Chinese Academy of Space Technology (CAST)/China.
- Commonwealth Scientific and Industrial Research Organization (CSIRO)/Australia.
- CSIR Satellite Applications Centre (CSIR)/Republic of South Africa.
- Danish National Space Center (DNSC)/Denmark.
- Departamento de Ciência e Tecnologia Aeroespacial (DCTA)/Brazil.
- European Organization for the Exploitation of Meteorological Satellites (EUMETSAT)/Europe.
- European Telecommunications Satellite Organization (EUTELSAT)/Europe.
- Geo-Informatics and Space Technology Development Agency (GISTDA)/Thailand.
- Hellenic National Space Committee (HNSC)/Greece.
- Indian Space Research Organization (ISRO)/India.
- Institute of Space Research (IKI)/Russian Federation.
- KFKI Research Institute for Particle & Nuclear Physics (KFKI)/Hungary.
- Korea Aerospace Research Institute (KARI)/Korea.
- Ministry of Communications (MOC)/Israel.
- National Institute of Information and Communications Technology (NICT)/Japan.
- National Oceanic and Atmospheric Administration (NOAA)/USA.
- National Space Agency of the Republic of Kazakhstan (NSARK)/Kazakhstan.
- National Space Organization (NSPO)/Chinese Taipei.
- Naval Center for Space Technology (NCST)/USA.
- Scientific and Technological Research Council of Turkey (TUBITAK)/Turkey.
- Space and Upper Atmosphere Research Commission (SUPARCO)/Pakistan.
- Swedish Space Corporation (SSC)/Sweden.

Documents
Document Sharing Hub

© ISO 2012 – All rights reserved
Full document details: BS ISO 22641:2012

– United States Geological Survey (USGS)/USA.

© ISO 2012 – All rights reserved
Full document details: BS ISO 22641:2012

DOCUMENT CONTROL

Document	Title	Date	Status
CCSDS 131.0-B-1	TM Synchronization and Channel Coding, Issue 1	September 2003	Original issue
CCSDS 131.0-B-2	TM Synchronization and Channel Coding, Recommended Standard, Issue 2	August 2011	Current issue. Changes from the previous issue are summarized below.

Changes not compatible with previous issue:

– adds LDPC Code.

Changes compatible with previous issue:

– adds Security, SANA, and Patent Considerations annex;

– corrects and updates erroneous and obsolete material;

– updates all coding sections for uniformity of presentation; rephrases specifications in CCSDS terse style, using 'shall' to specify binding and verifiable requirements; and differentiates non-normative text from normative text (see 1.6.2);

– clearly differentiates the terms 'Codeblock' and 'Codeword', with the term 'Codeblock' confined to Reed-Solomon coding (see definitions in annex D).

Documents
Document Sharing Hub

Full document details: BS ISO 22641:2012
© ISO 2012 – All rights reserved

CONTENTS

Section Page

1 INTRODUCTION 1-1

1.1 PURPOSE 1-1
1.2 SCOPE 1-1
1.3 APPLICABILITY 1-1
1.4 RATIONALE 1-2
1.5 DOCUMENT STRUCTURE 1-2
1.6 CONVENTIONS AND DEFINITIONS 1-3
1.7 PATENTED TECHNOLOGIES 1-5
1.8 REFERENCES 1-5

2 OVERVIEW 2-1

2.1 ARCHITECTURE 2-1
2.2 SUMMARY OF FUNCTIONS 2-1
2.3 INTERNAL ORGANIZATION OF SUBLAYER 2-3

3 CONVOLUTIONAL CODING 3-1

3.1 OVERVIEW 3-1
3.2 GENERAL 3-1
3.3 BASIC CONVOLUTIONAL CODE SPECIFICATION 3-2
3.4 PUNCTURED CONVOLUTIONAL CODES 3-4

4 REED-SOLOMON CODING 4-1

4.1 OVERVIEW 4-1
4.2 GENERAL 4-1
4.3 SPECIFICATION 4-1
4.4 DISCUSSION 4-6

5 CONCATENATED CODING 5-1

6 TURBO CODING 6-1

6.1 OVERVIEW 6-1
6.2 GENERAL 6-1
6.3 SPECIFICATION 6-1

Documents
Document Sharing Hub
© ISO 2012 – All rights reserved
Full document details: BS ISO 22641:2012

CONTENTS (continued)

Section Page

7 LOW-DENSITY PARITY-CHECK CODING 7-1

7.1 OVERVIEW 7-1
7.2 GENERAL 7-1
7.3 LOW-DENSITY PARITY-CHECK CODE WITH RATE 223/255 7-2
7.4 LOW-DENSITY PARITY-CHECK CODE FAMILY WITH RATES 1/2, 2/3, AND 4/5 7-7

8 FRAME SYNCHRONIZATION 8-1

8.1 OVERVIEW 8-1
8.2 THE ATTACHED SYNC MARKER (ASM) 8-2
8.3 ASM BIT PATTERNS 8-2
8.4 LOCATION OF ASM 8-4
8.5 RELATIONSHIP OF ASM TO REED-SOLOMON, TURBO, AND LDPC CODEBLOCKS AND CODEWORDS 8-4
8.6 ASM FOR EMBEDDED DATA STREAM 8-5

9 PSEUDO-RANDOMIZER 9-1

9.1 OVERVIEW 9-1
9.2 PSEUDO-RANDOMIZER DESCRIPTION 9-1
9.3 SYNCHRONIZATION AND APPLICATION OF PSEUDO-RANDOMIZER ... 9-2
9.4 SEQUENCE SPECIFICATION 9-2
9.5 LOGIC DIAGRAM 9-3

10 TRANSFER FRAME LENGTHS 10-1

10.1 OVERVIEW 10-1
10.2 GENERAL 10-1
10.3 CASE 1: UNCODED 10-1
10.4 CASE 2: CONVOLUTIONAL ONLY 10-1
10.5 CASE 3: REED-SOLOMON ONLY 10-1
10.6 CASE 4: CONCATENATED 10-2
10.7 CASE 5: TURBO 10-2
10.8 CASE 6: LDPC 10-3

11 MANAGED PARAMETERS 11-1

11.1 OVERVIEW 11-1
11.2 GENERAL 11-1

Documents
Document Sharing Hub

Full document details: BS ISO 22641:2012
© ISO 2012 – All rights reserved

CONTENTS (continued)

Section Page

11.3 MANAGED PARAMETERS FOR SELECTED OPTIONS 11-1
11.4 MANAGED PARAMETERS FOR CONVOLUTIONAL CODE 11-2
11.5 MANAGED PARAMETERS FOR REED-SOLOMON CODE 11-2
11.6 MANAGED PARAMETERS FOR TURBO CODE 11-3
11.7 MANAGED PARAMETERS FOR LOW-DENSITY PARITY-CHECK CODE 11-3
11.8 MANAGED PARAMETERS FOR FRAME SYNCHRONIZATION 11-3

ANNEX A SERVICE (NORMATIVE) A-1
ANNEX B SECURITY, SANA, AND PATENT CONSIDERATIONS (INFORMATIVE) B-1
ANNEX C ANNEX TO SUBSECTION 7.3, LOW-DENSITY PARITY-CHECK CODE WITH RATE 223/255 (INFORMATIVE) C-1
ANNEX D ACRONYMS AND TERMS (INFORMATIVE) D-1
ANNEX E INFORMATIVE REFERENCES (INFORMATIVE) E-1
ANNEX F TRANSFORMATION BETWEEN BERLEKAMP AND CONVENTIONAL REPRESENTATIONS (INFORMATIVE) F-1
ANNEX G EXPANSION OF REED-SOLOMON COEFFICIENTS (INFORMATIVE) G-1
ANNEX H CHANGES FROM REFERENCES [E2] AND [E3] (INFORMATIVE) H-1

Figure

1-1 Bit Numbering Convention 1-4
2-1 Relationship with OSI Layers 2-1
2-2 Internal Organization of the Sublayer at the Sending End 2-4
2-3 Internal Organization of the Sublayer at the Receiving End 2-5
3-1 Basic Convolutional Encoder Block Diagram 3-3
3-2 Punctured Encoder Block Diagram 3-4
4-1 Reed-Solomon Codeblock Partitioning 4-5
4-2 Functional Representation of R-S Interleaving 4-7
6-1 Interpretation of Permutation 6-5
6-2 Turbo Encoder Block Diagram 6-5
6-3 Turbo Codewords for Different Code Rates 6-8
6-4 Turbo Codeword with Attached Sync Marker 6-9
7-1 Base Parity Check Matrix of the Basic (8176, 7156) LDPC Code 7-3
7-2 Systematic Circulant Generator Matrix 7-6
7-3 Shortened Codeword 7-7
8-1 ASM Bit Pattern for Uncoded, Convolutional, Reed-Solomon, Concatenated, and Rate 7/8 LDPC Coded Data 8-3

Documents
Document Sharing Hub
© ISO 2012 – All rights reserved
Full document details: BS ISO 22641:2012

CONTENTS (continued)

Figure Page

8-2 ASM Bit Pattern for Rate 1/2 Turbo and Rates 1/2, 2/3, and 4/5 LDPC Coded Data 8-3
8-3 ASM Bit Pattern for Rate 1/3 Turbo Coded Data 8-3
8-4 ASM Bit Pattern for Rate 1/4 Turbo Coded Data 8-3
8-5 ASM Bit Pattern for Rate 1/6 Turbo Coded Data 8-4
8-6 Embedded ASM Bit Pattern 8-5
9-1 Pseudo-Randomizer Configuration 9-2
9-2 Pseudo-Randomizer Logic Diagram 9-3
F-1 Transformational Equivalence F-2

Table

3-1 Puncture Code Patterns for Convolutional Code Rates 3-4
6-1 Specified Information Block Lengths 6-3
6-2 Codeword Lengths for Supported Code Rates (Measured in Bits) 6-3
6-3 Parameters k_1 and k_2 for Specified Information Block Lengths 6-4
7-1 Specification of Circulants 7-4
7-2 Values of Submatrix Size M for Supported Codes 7-7
7-3 Description of $\phi_k(0,M)$ and $\phi_k(1,M)$ 7-9
7-4 Description of $\phi_k(2,M)$ and $\phi_k(3,M)$ 7-10
7-5 Codeword Lengths for Supported Code Rates (Measured in Bits) 7-11
11-1 Managed Parameters for Selected Options 11-2
11-2 Managed Parameters for Convolutional Code 11-2
11-3 Managed Parameters for Reed-Solomon Code 11-2
11-4 Managed Parameters for Turbo Code 11-3
11-5 Managed Parameters for Low Density Parity Check Code 11-3
11-6 Managed Parameters for Frame Synchronization 11-3
C-1 Table of Circulants for the Generator Matrix C-1
F-1 Equivalence of Representations F-5
H-1 Terms That Have Been Changed from Reference [E2] H-2
H-2 Terms That Have Been Changed from Reference [E3] H-2

Documents
Document Sharing Hub

Full document details: BS ISO 22641:2012
© ISO 2012 – All rights reserved

1 INTRODUCTION

1.1 PURPOSE

The purpose of this Recommended Standard is to specify synchronization and channel coding schemes used with the TM Space Data Link Protocol (reference [1]) or the AOS Space Data Link Protocol (reference [2]). These schemes are to be used over space-to-ground or space-to-space communications links by space missions.

1.2 SCOPE

This Recommended Standard defines synchronization and channel coding schemes in terms of:

a) the services provided to the users of this specification;

b) data formats; and

c) the procedures performed to generate and process the data formats.

It does not specify:

a) individual implementations or products;

b) the methods or technologies required to perform the procedures; or

c) the management activities required to configure and control the system.

1.3 APPLICABILITY

This Recommended Standard applies to the creation of Agency standards and to the future data communications over space links between CCSDS Agencies in cross-support situations. This Recommended Standard includes comprehensive specification of the data formats and procedures for inter-Agency cross support. It is neither a specification of, nor a design for, real systems that may be implemented for existing or future missions.

The Recommended Standard specified in this document is to be invoked through the normal standards programs of each CCSDS Agency, and is applicable to those missions for which cross support based on capabilities described in this Recommended Standard is anticipated. Where mandatory capabilities are clearly indicated in sections of this Recommended Standard, they must be implemented when this document is used as a basis for cross support. Where options are allowed or implied, implementation of these options is subject to specific bilateral cross support agreements between the Agencies involved.

Documents
Document Sharing Hub
© ISO 2012 – All rights reserved
Full document details: BS ISO 22641:2012

1.4 RATIONALE

The CCSDS believes it is important to document the rationale underlying the recommendations chosen, so that future evaluations of proposed changes or improvements will not lose sight of previous decisions.

1.5 DOCUMENT STRUCTURE

This document is divided into eleven numbered sections and seven annexes:

a) section 1 presents the purpose, scope, applicability and rationale of this Recommended Standard and lists the conventions, definitions, and references used throughout the document;

b) section 2 provides an overview of synchronization and channel coding;

c) section 3 specifies convolutional coding;

d) section 4 specifies Reed-Solomon coding;

e) section 5 concatenated coding;

f) section 6 specifies Turbo coding;

g) section 7 specifies low-density parity-check coding;

h) section 8 specifies the frame synchronization scheme;

i) section 9 specifies the Pseudo-Randomizer;

j) section 10 specifies the allowed lengths of Transfer Frames;

k) section 11 lists the managed parameters associated with synchronization and channel coding;

l) annex A defines the service provided to the users;

m) annex B discusses security issues related to TM Channel Coding;

n) annex C provides the generator matrix circulant table applicable to rate-223/255 LDPC coding (7.3);

o) annex D lists acronyms and terms used within this document;

p) annex E provides a list of informative references;

q) annex F provides information on transformation between the Berlekamp (dual basis) and Conventional representations;

r) annex G provides information on Reed-Solomon coefficients;

Documents
Document Sharing Hub

© ISO 2012 – All rights reserved
Full document details: BS ISO 22641:2012

s) annex H lists the changes from relevant previously published CCSDS Recommended Standards (references [E2] and [E3]).

1.6 CONVENTIONS AND DEFINITIONS

1.6.1 DEFINITIONS

1.6.1.1 Definitions from the Open System Interconnection (OSI) Basic Reference Model

This Recommended Standard makes use of a number of terms defined in reference [3]. The use of those terms in this Recommended Standard shall be understood in a generic sense; i.e., in the sense that those terms are generally applicable to any of a variety of technologies that provide for the exchange of information between real systems. Those terms are:

a) Data Link Layer;

b) Physical Layer;

c) service;

d) service data unit.

1.6.1.2 Definitions from OSI Service Definition Conventions

This Recommended Standard makes use of a number of terms defined in reference [4]. The use of those terms in this Recommended Standard shall be understood in a generic sense; i.e., in the sense that those terms are generally applicable to any of a variety of technologies that provide for the exchange of information between real systems. Those terms are:

a) indication;

b) primitive;

c) request;

d) service provider;

e) service user.

1.6.1.3 Definition of Terms Used in This Recommended Standard

For the purposes of this Recommended Standard, the following definitions apply. Many other terms that pertain to specific items are defined in the appropriate sections.

Mission Phase: a period of a mission during which specified communications characteristics are fixed. The transition between two consecutive mission phases may cause an interruption of the communications services.

Documents
Document Sharing Hub
© ISO 2012 – All rights reserved
Full document details: BS ISO 22641:2012

Physical Channel: a stream of bits transferred over a space link in a single direction.

space link: a communications link between a spacecraft and its associated ground system or between two spacecraft. A space link consists of one or more Physical Channels in one or both directions.

1.6.2 NOMENCLATURE

The following conventions apply for the normative specifications in this Recommended Standard:

a) the words 'shall' and 'must' imply a binding and verifiable specification;

b) the word 'should' implies an optional, but desirable, specification;

c) the word 'may' implies an optional specification;

d) the words 'is', 'are', and 'will' imply statements of fact.

NOTE – These conventions do not imply constraints on diction in text that is clearly informative in nature.

1.6.3 CONVENTIONS

In this document, the following convention is used to identify each bit in an *N*-bit field. The first bit in the field to be transmitted (i.e., the most left justified when drawing a figure) is defined to be 'Bit 0', the following bit is defined to be 'Bit 1', and so on up to 'Bit *N*-1'. When the field is used to express a binary value (such as a counter), the Most Significant Bit (MSB) shall be the first transmitted bit of the field, i.e., 'Bit 0' (see figure 1-1).

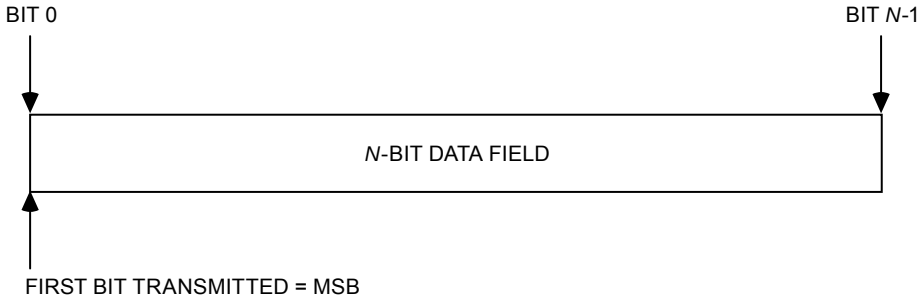

Figure 1-1: Bit Numbering Convention

In accordance with standard data-communications practice, data fields are often grouped into 8-bit 'words' which conform to the above convention. Throughout this Recommended Standard, such an 8-bit word is called an 'octet'.

The numbering for octets within a data structure starts with '0'.

Documents
Document Sharing Hub

© ISO 2012 – All rights reserved
Full document details: BS ISO 22641:2012

1.7 PATENTED TECHNOLOGIES

The CCSDS draws attention to the fact that it is claimed that compliance with this document may involve the use of patents concerning Turbo Coding (section 6) and Low-Density Parity-Check Coding (section 7).

The CCSDS takes no position concerning the evidence, validity, and scope of these patent rights.

The holders of these patent rights have assured the CCSDS that they are willing to negotiate licenses under reasonable and non-discriminatory terms and conditions with applicants throughout the world. In this respect, the statements of the holders of these patent rights are registered with CCSDS. Information can be obtained from the CCSDS Secretariat at the address indicated on page i. Contact information for the holders of these patent rights is provided in annex B.

Attention is drawn to the possibility that some of the elements of this document may be the subject of patent rights other than those identified above. The CCSDS shall not be held responsible for identifying any or all such patent rights.

1.8 REFERENCES

The following documents contain provisions which, through reference in this text, constitute provisions of this Recommended Standard. At the time of publication, the editions indicated were valid. All documents are subject to revision, and users of this Recommended Standard are encouraged to investigate the possibility of applying the most recent editions of the documents indicated below. The CCSDS Secretariat maintains a register of currently valid CCSDS Recommended Standards.

[1] *TM Space Data Link Protocol*. Recommendation for Space Data Systems Standards, CCSDS 132.0-B-1. Blue Book. Issue 1. Washington, D.C.: CCSDS, September 2003.

[2] *AOS Space Data Link Protocol*. Recommendation for Space Data System Standards, CCSDS 732.0-B-2. Blue Book. Issue 2. Washington, D.C.: CCSDS, July 2006.

[3] *Information Technology—Open Systems Interconnection—Basic Reference Model: The Basic Model*. International Standard, ISO/IEC 7498-1. 2nd ed. Geneva: ISO, 1994.

[4] *Information Technology—Open Systems Interconnection—Basic Reference Model—Conventions for the definition of OSI services*. International Standard, ISO/IEC 10731:1994. Geneva: ISO, 1994.

[5] *Radio Frequency and Modulation Systems—Part 1: Earth Stations and Spacecraft*. Recommendation for Space Data Systems Standards, CCSDS 401.0-B. Blue Book. Washington, D.C.: CCSDS, March 2003.

NOTE – Informative references are listed in annex E.

Documents
Document Sharing Hub
© ISO 2012 – All rights reserved
Full document details: BS ISO 22641:2012

(Blank Page)

Documents
Document Sharing Hub

Full document details: BS ISO 22641:2012
© ISO 2012 – All rights reserved

2 OVERVIEW

2.1 ARCHITECTURE

Figure 2-1 illustrates the relationship of this Recommended Standard to the Open Systems Interconnection reference model (reference [3]). Two sublayers of the Data Link Layer are defined for CCSDS space link protocols. The TM and AOS Space Data Link Protocols specified in references [1] and [2], respectively, correspond to the Data Link Protocol Sublayer, and provide functions for transferring data using the protocol data unit called the Transfer Frame. The Synchronization and Channel Coding Sublayer provides additional functions necessary for transferring Transfer Frames over a space link. These functions are error-control coding/decoding, Transfer Frame delimiting/synchronizing, and bit transition generation/removal.

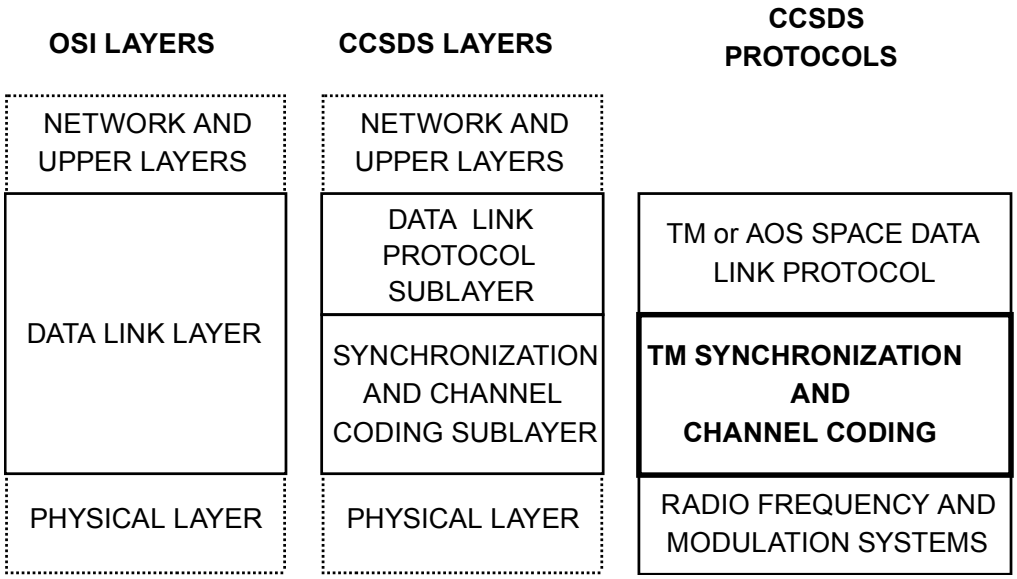

Figure 2-1: Relationship with OSI Layers

2.2 SUMMARY OF FUNCTIONS

2.2.1 GENERAL

The Synchronization and Channel Coding Sublayer provides the following three functions for transferring Transfer Frames over a space link:

a) error-control coding, including frame validation;

b) synchronization; and

c) pseudo-randomizing.

Documents
Document Sharing Hub
© ISO 2012 – All rights reserved
Full document details: BS ISO 22641:2012

2.2.2 ERROR-CONTROL CODING

This Recommended Standard specifies the following four types of error-control coding:

a) convolutional coding (section 3);

b) Reed-Solomon coding (section 4);

c) Turbo coding (section 5);

d) Low-Density Parity-Check (LDPC) coding (section 7).

One of the convolutional codes described in section 3 alone may be satisfactory depending on performance requirements.

For Physical Channels, which are bandwidth-constrained and cannot tolerate the increase in bandwidth required by the basic convolutional code specified in 3.3, the punctured convolutional codes specified in 3.4 have the advantage of smaller bandwidth expansion.

Alternatively, the Reed-Solomon codes and the high rate LDPC code specified in sections 4 and 7 also have the advantage of smaller bandwidth expansion and have the capability to indicate the presence of uncorrectable errors. Where a greater coding gain is needed than can be provided by a convolutional code or Reed-Solomon code alone, a concatenation of a convolutional code as the inner code with a Reed-Solomon code as the outer code may be used for improved performance.

The Turbo codes specified in section 5 or the LDPC codes specified in section 7 may be used to obtain even greater coding gain where the environment permits.

NOTES

1 In this Recommended Standard, the characteristics of the codes are specified only to the extent necessary to ensure interoperability and cross-support. The specification does not attempt to quantify the relative coding gain or the merits of each approach discussed, nor does it specify the design requirements for encoders or decoders.

2 The domains of applicability for the codes specified in this document are delineated in *Mission Profiles for TM Synchronization and Channel Coding* (reference [E5]).

2.2.3 FRAME VALIDATION

After decoding is performed, the upper layers at the receiving end also need to know whether or not each decoded Transfer Frame can be used as a valid data unit; i.e., an indication of the quality of the received frame is needed. This function is called Frame Validation. The Reed-Solomon and LDPC decoders can determine, with a very high probability, whether or not they can correctly decode a Transfer Frame. Therefore, the Reed-Solomon and LDPC codes are also

Documents
Document Sharing Hub

© ISO 2012 – All rights reserved
Full document details: BS ISO 22641:2012

used for Frame Validation. When the Reed-Solomon or LDPC codes are not used, the Frame Error Control Field defined in references [1] or [2] is used for Frame Validation.

2.2.4 SYNCHRONIZATION

This Recommended Standard specifies a method for synchronizing Transfer Frames using an Attached Sync Marker (ASM) (see section 8).

The ASM may also be used for resolution of data ambiguity (sense of '1' and '0') if data ambiguity is not resolved by the modulation method used in the Physical Layer.

2.2.5 PSEUDO-RANDOMIZING

This Recommended Standard specifies a pseudo-randomizer to improve several aspects of the telemetry link that aid receiver acquisition, bit synchronization (see section 9), convolutional code synchronization, and proper Frame Validation (see 2.2.3).

2.3 INTERNAL ORGANIZATION OF SUBLAYER

2.3.1 SENDING END

Figure 2-2 shows the internal organization of the Synchronization and Channel Coding Sublayer of the sending end. This figure identifies functions performed by the sublayer and shows logical relationships among these functions. The figure is not intended to imply any hardware or software configuration in a real system. Depending on the options actually used for a mission, not all of the functions may be present in the sublayer.

At the sending end, the Synchronization and Channel Coding Sublayer accepts Transfer Frames of fixed length from the Data Link Protocol Sublayer (see figure 2-1), performs functions selected for the mission, and delivers a continuous and contiguous stream of channel symbols to the Physical Layer.

Documents
Document Sharing Hub
© ISO 2012 – All rights reserved
Full document details: BS ISO 22641:2012

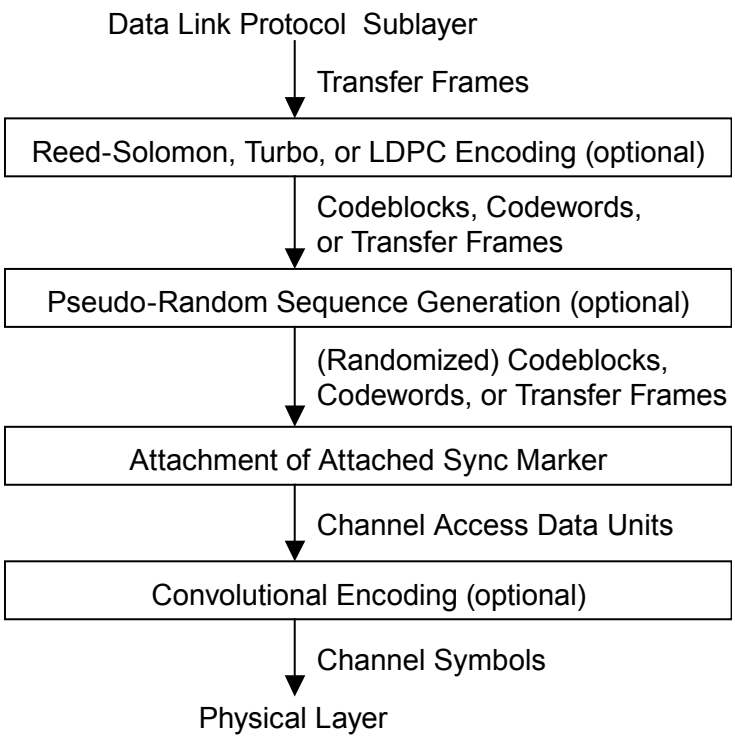

Figure 2-2: Internal Organization of the Sublayer at the Sending End

2.3.2 RECEIVING END

Figure 2-3 shows the internal organization of the Synchronization and Channel Coding Sublayer of the receiving end. This figure identifies functions performed by the sublayer and shows logical relationships among these functions. The figure is not intended to imply any hardware or software configuration in a real system (e.g., some implementations perform frame synchronization before convolutional decoding when convolutional code rate 1/2 is used) . Depending on the options actually used for a mission, not all of the functions may be present in the sublayer.

At the receiving end, the Synchronization and Channel Coding Sublayer accepts a continuous and contiguous stream of channel symbols from the Physical Layer, performs functions selected for the mission, and delivers Transfer Frames to the Data Link Protocol Sublayer.

Documents
Document Sharing Hub
Full document details: BS ISO 22641:2012
© ISO 2012 – All rights reserved

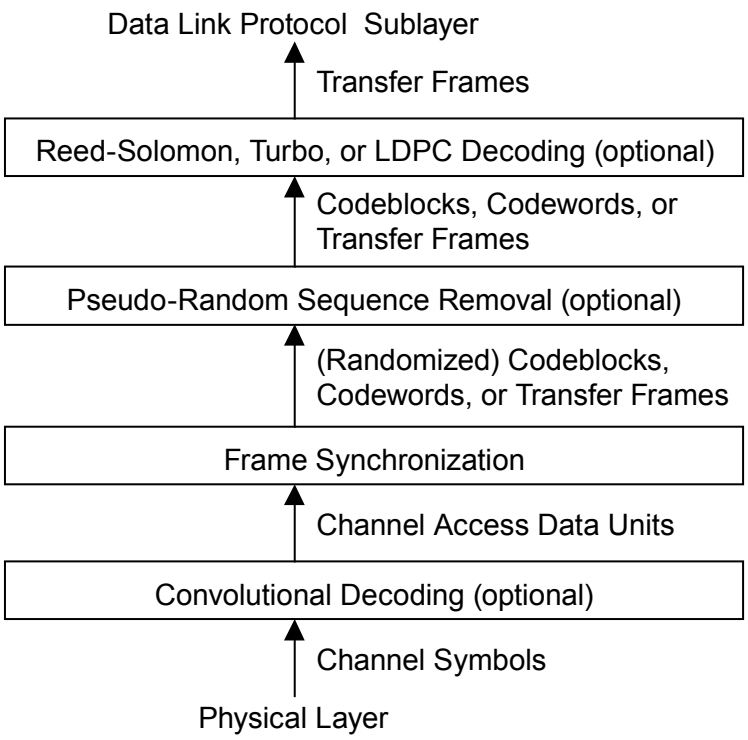

Figure 2-3: Internal Organization of the Sublayer at the Receiving End

© ISO 2012 – All rights reserved
Full document details: BS ISO 22641:2012
Documents
Document Sharing Hub

(Blank Page)

Documents
Document Sharing Hub

Full document details: BS ISO 22641:2012
© ISO 2012 – All rights reserved

3 CONVOLUTIONAL CODING

3.1 OVERVIEW

The basic convolutional code is a rate (r) 1/2, constraint-length (K) 7 transparent code which is well suited for channels with predominantly Gaussian noise. This code is defined in 3.3. When this code is punctured according to 3.4, higher code rates may be achieved although with lower error correcting performance.

Puncturing allows a single code rate of either 2/3, 3/4, 5/6 or 7/8 to be selected. The four different puncturing schemes allow selection of the most appropriate level of error correction and symbol rate for a given service or data rate.

3.2 GENERAL

3.2.1 ATTACHED SYNC MARKER

The Attached Sync Marker used with convolutional code shall be the 32-bit pattern specified in 8.2, and it shall always be inserted before performing convolutional encoding.

3.2.2 DATA RANDOMIZATION

The pseudo-randomizer defined in section 9 shall be used unless the system designer verifies that the concerns identified in the note below are resolved by other means.

NOTE – An inverter is specified with the basic convolutional code to assure sufficient bit transitions to keep receiver symbol synchronizers in lock, when used with Binary Phase Shift Keying (BPSK) modulation. Sufficient bit transitions cannot be guaranteed by the inverter alone if some multiplexing schemes are used, e.g., with Quadrature Phase Shift Keying (QPSK) modulation, or if a punctured convolutional code is used. There are also data patterns for which convolutional code synchronization cannot be determined. The pseudo-randomizer is also used to aid signal acquisition and to mitigate spectral lines in the transmitted signal.

3.2.3 FRAME VALIDATION

When TM or AOS Transfer Frames are used, the Frame Error Control Field (FECF) specified in references [1] and [2] shall be used to validate the Transfer Frame, unless the convolutional code is concatenated with an outer Reed-Solomon code (see section 4).

NOTE – If the decoder's correction capability is exceeded, undetected bursts of errors may appear in the output.

Documents
Document Sharing Hub
© ISO 2012 – All rights reserved
Full document details: BS ISO 22641:2012

3.2.4 QUANTIZATION

Soft bit decisions with at least three-bit quantization should be used whenever constraints (such as complexity of decoder) permit.

3.3 BASIC CONVOLUTIONAL CODE SPECIFICATION

3.3.1 The basic convolutional code shall be the non-systematic code with the following characteristics:

(1) Nomenclature:	Convolutional code with maximum-likelihood decoding.
(2) Code rate (*r*):	1/2 bit per symbol.
(3) Constraint length (*K*):	7 bits.
(4) Connection vectors:	G1 = 1111001 (171 octal); G2= 1011011(133 octal).
(5) Symbol inversion:	On output path of G2.

NOTE – An encoder block diagram is shown in figure 3-1. When a single encoder is used, G2 inversion provides no benefit to data randomization when even-order modulations higher than BPSK are used. G2 inversion does provide value when coding is done after channel splitting and with separate encoders on each channel.

3.3.2 The output symbol sequence shall be: $C_1(1), \overline{C_2(1)}, C_1(2), \overline{C_2(2)}. \ldots$

3.3.3 When suppressed-carrier modulation systems are used:

a) Non-Return-to-Zero-Mark (NRZ-M) or Non-Return-to-Zero-Level (NRZ-L) may be used as a modulating waveform.

b) If the user contemplates differential encoding, i.e., conversion of his modulating waveform from NRZ-L to NRZ-M, such conversion should be performed at the input to the convolutional encoder.

NOTES

1 Since the convolutional codes are transparent, differential encoding can be used before the convolutional encoder to help phase ambiguity resolution and, correspondingly, the conversion at the receiving end from NRZ-M to NRZ-L should be performed at the output of the convolutional decoder. Differential encoding after the convolutional encoder is not advised because it introduces considerable loss of performance. It also would require differential detection, which is more complex with soft symbols.

Documents
Document Sharing Hub

© ISO 2012 – All rights reserved
Full document details: BS ISO 22641:2012

2 When a fixed pattern (the fixed part of the convolutionally encoded Attached Sync Marker) in the symbol stream is used to provide node synchronization for the convolutional decoder, any modification of the pattern resulting from the modulating waveform conversion needs to be accounted for.

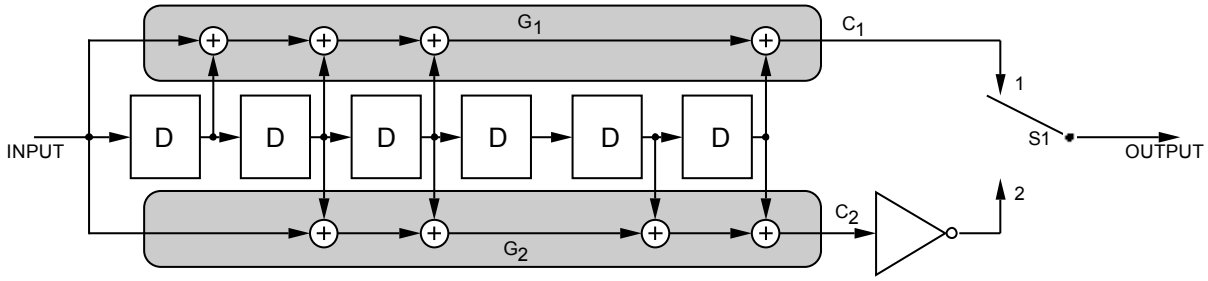

NOTES:

1. → D → = SINGLE BIT DELAY.

2. FOR EVERY INPUT BIT, TWO SYMBOLS ARE GENERATED BY COMPLETION OF A CYCLE FOR S1: POSITION 1, POSITION 2.

3. S1 IS IN THE POSITION SHOWN (1) FOR THE FIRST SYMBOL ASSOCIATED WITH AN INCOMING BIT.

4. ⊕ = MODULO-2 ADDER.

5. → ▷ ○ = INVERTER.

Figure 3-1: Basic Convolutional Encoder Block Diagram

© ISO 2012 – All rights reserved
Full document details: BS ISO 22641:2012
Documents
Document Sharing Hub