BS ISO 22645:2016

BSI Standards Publication

Space data and information transfer systems — TM (telemetry) space data link protocol

Documents
Document Sharing Hub

Full document details: BS ISO 22645:2016

National foreword

This British Standard is the UK implementation of ISO 22645:2016. It supersedes BS ISO 22645:2005+A1:2015 which is withdrawn.

The UK participation in its preparation was entrusted to Technical Committee ACE/68, Space systems and operations.

A list of organizations represented on this committee can be obtained on request to its secretary.

This publication does not purport to include all the necessary provisions of a contract. Users are responsible for its correct application.

© The British Standards Institution 2016.
Published by BSI Standards Limited 2016

ISBN 978 0 580 93374 5

ICS 49.140

Compliance with a British Standard cannot confer immunity from legal obligations.

This British Standard was published under the authority of the Standards Policy and Strategy Committee on 30 November 2016.

Amendments/corrigenda issued since publication

Date	Text affected

Documents
Document Sharing Hub

Full document details: BS ISO 22645:2016

INTERNATIONAL STANDARD

ISO 22645

Second edition
2016-11-15

Space data and information transfer systems — TM (telemetry) space data link protocol

Systèmes de transfert des données et informations spatiales — Protocole de liaison de données spatiales TM (télémétrie)

Reference number
ISO 22645:2016(E)

Documents
Document Sharing Hub

© ISO 2016

Full document details: BS ISO 22645:2016

COPYRIGHT PROTECTED DOCUMENT

© ISO 2016

All rights reserved. Unless otherwise specified, no part of this publication may be reproduced or utilized otherwise in any form or by any means, electronic or mechanical, including photocopying, or posting on the internet or an intranet, without prior written permission. Permission can be requested from either ISO at the address below or ISO's member body in the country of the requester.

ISO copyright office
Ch. de Blandonnet 8 • CP 401
CH-1214 Vernier, Geneva, Switzerland
Tel. + 41 22 749 01 11
Fax + 41 22 749 09 47
copyright@iso.org
Web www.iso.org

Published in Switzerland

© ISO 2016 – All rights reserved

Documents
Document Sharing Hub

Full document details: BS ISO 22645:2016

Foreword

ISO (the International Organization for Standardization) is a worldwide federation of national standards bodies (ISO member bodies). The work of preparing International Standards is normally carried out through ISO technical committees. Each member body interested in a subject for which a technical committee has been established has the right to be represented on that committee. International organizations, governmental and non-governmental, in liaison with ISO, also take part in the work. ISO collaborates closely with the International Electrotechnical Commission (IEC) on all matters of electrotechnical standardization.

The procedures used to develop this document and those intended for its further maintenance are described in the ISO/IEC Directives, Part 1. In particular the different approval criteria needed for the different types of ISO documents should be noted. This document was drafted in accordance with the editorial rules of the ISO/IEC Directives, Part 2. www.iso.org/directives

Attention is drawn to the possibility that some of the elements of this document may be the subject of patent rights. ISO shall not be held responsible for identifying any or all such patent rights. Details of any patent rights identified during the development of the document will be in the Introduction and/or on the ISO list of patent declarations received. www.iso.org/patents

Any trade name used in this document is information given for the convenience of users and does not constitute an endorsement.

For an explanation on the meaning of ISO specific terms and expressions related to conformity assessment, as well as information about ISO's adherence to the WTO principles in the Technical Barriers to Trade (TBT) see the following URL: Foreword - Supplementary information

ISO 22645 was prepared by the Consultative Committee for Space Data Systems (CCSDS) (as CCSDS 132.0-B-2, September 2015) and was adopted (without modifications except those stated in clause 2 of this International Standard) by Technical Committee ISO/TC 20, *Aircraft and space vehicles*, Subcommittee SC 13, *Space data and information transfer systems*.

This second edition cancels and replaces the first edition (ISO 22645:2005), which has been technically revised. It also incorporates the amendment ISO 22645:2005/Amd.1:2015.

© ISO 2016 – All rights reserved

Documents
Document Sharing Hub
Full document details: BS ISO 22645:2016

STATEMENT OF INTENT

The Consultative Committee for Space Data Systems (CCSDS) is an organization officially established by the management of its members. The Committee meets periodically to address data systems problems that are common to all participants, and to formulate sound technical solutions to these problems. Inasmuch as participation in the CCSDS is completely voluntary, the results of Committee actions are termed **Recommended Standards** and are not considered binding on any Agency.

This **Recommended Standard** is issued by, and represents the consensus of, the CCSDS members. Endorsement of this **Recommendation** is entirely voluntary. Endorsement, however, indicates the following understandings:

- Whenever a member establishes a CCSDS-related **standard**, this **standard** will be in accord with the relevant **Recommended Standard**. Establishing such a **standard** does not preclude other provisions which a member may develop.
- Whenever a member establishes a CCSDS-related **standard**, that member will provide other CCSDS members with the following information:
  - The **standard** itself.
  - The anticipated date of initial operational capability.
  - The anticipated duration of operational service.
- Specific service arrangements shall be made via memoranda of agreement. Neither this **Recommended Standard** nor any ensuing **standard** is a substitute for a memorandum of agreement.

No later than five years from its date of issuance, this **Recommended Standard** will be reviewed by the CCSDS to determine whether it should: (1) remain in effect without change; (2) be changed to reflect the impact of new technologies, new requirements, or new directions; or (3) be retired or canceled.

In those instances when a new version of a **Recommended Standard** is issued, existing CCSDS-related member standards and implementations are not negated or deemed to be non-CCSDS compatible. It is the responsibility of each member to determine when such standards or implementations are to be modified. Each member is, however, strongly encouraged to direct planning for its new standards and implementations towards the later version of the Recommended Standard.

Documents
Document Sharing Hub
© ISO 2016 – All rights reserved
Full document details: BS ISO 22645:2016

FOREWORD

This document is a technical Recommendation for use in developing flight and ground systems for space missions and has been prepared by the Consultative Committee for Space Data Systems (CCSDS). The TM Space Data Link Protocol described herein is intended for missions that are cross-supported between Agencies of the CCSDS.

Attention is drawn to the possibility that some of the elements of this document may be the subject of patent rights. CCSDS has processes for identifying patent issues and for securing from the patent holder agreement that all licensing policies are reasonable and non-discriminatory. However, CCSDS does not have a patent law staff, and CCSDS shall not be held responsible for identifying any or all such patent rights.

Through the process of normal evolution, it is expected that expansion, deletion, or modification of this document may occur. This Recommended Standard is therefore subject to CCSDS document management and change control procedures, which are defined in *Organization and Processes for the Consultative Committee for Space Data Systems* (CCSDS A02.1-Y-4). Current versions of CCSDS documents are maintained at the CCSDS Web site:

http://www.ccsds.org/

Questions relating to the contents or status of this document should be sent to the CCSDS Secretariat at the e-mail address indicated on page i.

Documents
Document Sharing Hub
© ISO 2016 – All rights reserved
Full document details: BS ISO 22645:2016

At time of publication, the active Member and Observer Agencies of the CCSDS were:

Member Agencies

- Agenzia Spaziale Italiana (ASI)/Italy.
- Canadian Space Agency (CSA)/Canada.
- Centre National d'Etudes Spatiales (CNES)/France.
- China National Space Administration (CNSA)/People's Republic of China.
- Deutsches Zentrum für Luft- und Raumfahrt (DLR)/Germany.
- European Space Agency (ESA)/Europe.
- Federal Space Agency (FSA)/Russian Federation.
- Instituto Nacional de Pesquisas Espaciais (INPE)/Brazil.
- Japan Aerospace Exploration Agency (JAXA)/Japan.
- National Aeronautics and Space Administration (NASA)/USA.
- UK Space Agency/United Kingdom.

Observer Agencies

- Austrian Space Agency (ASA)/Austria.
- Belgian Federal Science Policy Office (BFSPO)/Belgium.
- Central Research Institute of Machine Building (TsNIIMash)/Russian Federation.
- China Satellite Launch and Tracking Control General, Beijing Institute of Tracking and Telecommunications Technology (CLTC/BITTT)/China.
- Chinese Academy of Sciences (CAS)/China.
- Chinese Academy of Space Technology (CAST)/China.
- Commonwealth Scientific and Industrial Research Organization (CSIRO)/Australia.
- Danish National Space Center (DNSC)/Denmark.
- Departamento de Ciência e Tecnologia Aeroespacial (DCTA)/Brazil.
- Electronics and Telecommunications Research Institute (ETRI)/Korea.
- European Organization for the Exploitation of Meteorological Satellites (EUMETSAT)/Europe.
- European Telecommunications Satellite Organization (EUTELSAT)/Europe.
- Geo-Informatics and Space Technology Development Agency (GISTDA)/Thailand.
- Hellenic National Space Committee (HNSC)/Greece.
- Indian Space Research Organization (ISRO)/India.
- Institute of Space Research (IKI)/Russian Federation.
- KFKI Research Institute for Particle & Nuclear Physics (KFKI)/Hungary.
- Korea Aerospace Research Institute (KARI)/Korea.
- Ministry of Communications (MOC)/Israel.
- National Institute of Information and Communications Technology (NICT)/Japan.
- National Oceanic and Atmospheric Administration (NOAA)/USA.
- National Space Agency of the Republic of Kazakhstan (NSARK)/Kazakhstan.
- National Space Organization (NSPO)/Chinese Taipei.
- Naval Center for Space Technology (NCST)/USA.
- Scientific and Technological Research Council of Turkey (TUBITAK)/Turkey.
- South African National Space Agency (SANSA)/Republic of South Africa.
- Space and Upper Atmosphere Research Commission (SUPARCO)/Pakistan.
- Swedish Space Corporation (SSC)/Sweden.
- Swiss Space Office (SSO)/Switzerland.
- United States Geological Survey (USGS)/USA.

Documents
Document Sharing Hub
© ISO 2016 – All rights reserved
Full document details: BS ISO 22645:2016

DOCUMENT CONTROL

Document	Title	Date	Status
CCSDS 132.0-B-1	TM Space Data Link Protocol, Recommended Standard, Issue 1	September 2003	Original issue, superseded
CCSDS 132.0-B-2	TM Space Data Link Protocol, Recommended Standard, Issue 2	September 2015	Current issue: – adds specifications to support the Space Data Link Security Protocol; – updates Frame Error Control Field Encoding Procedure to be consistent with other CCSDS Space Data Link Protocol specifications; – changes all occurrences of 'Packet Service' and 'Packet Transfer Service' to 'Virtual Channel Packet Service'; – corrects/clarifies Service Specification '.indication' text; – updates/clarifies text relating to Idle Packet generation; – removes obsolete informative annex detailing changes from Historical Recommendations CCSDS 102.0-B-5-S (1984–2005) and CCSDS 103.0-B-2-S (1996–2005).

NOTE – Substantive changes from the previous issue are marked by change bars in the inside margin. For terminology changes affecting the entire document, only the first instances are marked.

Documents
Document Sharing Hub
© ISO 2016 – All rights reserved
Full document details: BS ISO 22645:2016

CONTENTS

Section Page

1 INTRODUCTION 1-1

1.1 PURPOSE 1-1
1.2 SCOPE 1-1
1.3 APPLICABILITY 1-1
1.4 RATIONALE 1-2
1.5 DOCUMENT STRUCTURE 1-2
1.6 CONVENTIONS AND DEFINITIONS 1-2
1.7 REFERENCES 1-6

2 OVERVIEW 2-1

2.1 CONCEPT OF TM SPACE DATA LINK PROTOCOL 2-1
2.2 OVERVIEW OF SERVICES 2-4
2.3 OVERVIEW OF FUNCTIONS 2-12
2.4 SERVICES ASSUMED FROM LOWER LAYERS 2-14

3 SERVICE DEFINITION 3-1

3.1 OVERVIEW 3-1
3.2 SOURCE DATA 3-1
3.3 VIRTUAL CHANNEL PACKET (VCP) SERVICE 3-4
3.4 VIRTUAL CHANNEL ACCESS (VCA) SERVICE 3-8
3.5 VIRTUAL CHANNEL FRAME SECONDARY HEADER (VC_FSH) SERVICE 3-12
3.6 VIRTUAL CHANNEL OPERATIONAL CONTROL FIELD (VC_OCF) SERVICE 3-15
3.7 VIRTUAL CHANNEL FRAME (VCF) SERVICE 3-18
3.8 MASTER CHANNEL FRAME SECONDARY HEADER (MC_FSH) SERVICE 3-21
3.9 MASTER CHANNEL OPERATIONAL CONTROL FIELD (MC_OCF) SERVICE 3-24
3.10 MASTER CHANNEL FRAME (MCF) SERVICE 3-27

4 PROTOCOL SPECIFICATION WITHOUT SDLS OPTION 4-1

4.1 PROTOCOL DATA UNIT 4-1
4.2 PROTOCOL PROCEDURES AT THE SENDING END 4-15
4.3 PROTOCOL PROCEDURES AT THE RECEIVING END 4-22

Documents
Document Sharing Hub
© ISO 2016 – All rights reserved
Full document details: BS ISO 22645:2016

CONTENTS (continued)

Section Page

5 MANAGED PARAMETERS WITHOUT SDLS OPTION 5-1

5.1 MANAGED PARAMETERS FOR A PHYSICAL CHANNEL 5-1
5.2 MANAGED PARAMETERS FOR A MASTER CHANNEL 5-2
5.3 MANAGED PARAMETERS FOR A VIRTUAL CHANNEL 5-2
5.4 MANAGED PARAMETERS FOR PACKET TRANSFER 5-3

6 PROTOCOL SPECIFICATION WITH SDLS OPTION 6-1

6.1 OVERVIEW 6-1
6.2 USE OF SDLS PROTOCOL 6-1
6.3 TM TRANSFER FRAME WITH SDLS 6-1
6.4 SENDING END PROTOCOL PROCEDURES WITH SDLS 6-4
6.5 RECEIVING END PROTOCOL PROCEDURES WITH SDLS 6-7
6.6 MANAGED PARAMETERS WITH SDLS 6-9

ANNEX A ACRONYMS (INFORMATIVE) A-1
ANNEX B INFORMATIVE REFERENCES (INFORMATIVE) B-1

Figure

1-1 Bit Numbering Convention 1-5
2-1 Relationship with OSI Layers 2-1
2-2 Relationships Between Channels 2-3
2-3 Asynchronous Service Model 2-5
2-4 Synchronous Service Model 2-6
2-5 Internal Organization of Protocol Entity (Sending End) 2-13
2-6 Internal Organization of Protocol Entity (Receiving End) 2-13
2-7 TM Space Data Link Protocol Channel Tree 2-14
4-1 TM Transfer Frame Structural Components 4-2
4-2 Transfer Frame Primary Header 4-2
4-3 Transfer Frame Data Field Status 4-5
4-4 Transfer Frame Secondary Header 4-8
4-5 Logic Diagram of the Encoder 4-13
4-6 Logic Diagram of the Decoder 4-14
4-7 Internal Organization of Protocol Entity (Sending End) 4-15
4-8 Abstract Model of Packet Processing Function 4-16
4-9 Abstract Model of Virtual Channel Generation Function 4-18
4-10 Abstract Model of Virtual Channel Multiplexing Function 4-19
4-11 Abstract Model of Master Channel Generation Function 4-20

Documents
Document Sharing Hub
© ISO 2016 – All rights reserved
Full document details: BS ISO 22645:2016

CONTENTS (continued)

Figure Page

4-12 Abstract Model of Master Channel Multiplexing Function 4-21
4-13 Abstract Model of All Frames Generation Function 4-22
4-14 Internal Organization of Protocol Entity (Receiving End) 4-22
4-15 Abstract Model of Packet Extraction Function 4-24
4-16 Abstract Model of Virtual Channel Reception Function 4-25
4-17 Abstract Model of Virtual Channel Demultiplexing Function 4-26
4-18 Abstract Model of Master Channel Reception Function 4-27
4-19 Abstract Model of Master Channel Demultiplexing Function 4-28
4-20 Abstract Model of All Frames Reception Function 4-28
6-1 Frame without SDLS Compared to Frame with SDLS 6-2

Table

2-1 Summary of Services Provided by TM Space Data Link Protocol 2-7
2-2 Summary of TM Services Supported by the Space Data Link Security Protocol 2-8
5-1 Managed Parameters for a Physical Channel 5-1
5-2 Managed Parameters for a Master Channel 5-2
5-3 Managed Parameters for a Virtual Channel 5-2
5-4 Managed Parameters for Packet Transfer 5-3
6-1 Additional Managed Parameters for a Virtual Channel when TM Space Data Link Protocol Supports SDLS 6-9

Documents
Document Sharing Hub
© ISO 2016 – All rights reserved
Full document details: BS ISO 22645:2016

1 INTRODUCTION

1.1 PURPOSE

The purpose of this Recommended Standard is to specify the Telemetry (TM) Space Data Link Protocol. This protocol is a Data Link Layer protocol (see reference [1]) to be used over space-to-ground or space-to-space communications links by space missions.

1.2 SCOPE

This Recommended Standard defines the TM Space Data Link Protocol in terms of:

a) the services provided to the users of this protocol;

b) the protocol data units employed by the protocol; and

c) the procedures performed by the protocol.

It does not specify:

a) individual implementations or products;

b) the implementation of service interfaces within real systems;

c) the methods or technologies required to perform the procedures; or

d) the management activities required to configure and control the protocol.

1.3 APPLICABILITY

This Recommended Standard applies to the creation of Agency standards and to future data communications over space links between CCSDS Agencies in cross-support situations. The Recommended Standard includes comprehensive specification of the services and protocol for inter-Agency cross support. It is neither a specification of, nor a design for, real systems that may be implemented for existing or future missions.

The Recommended Standard specified in this document is to be invoked through the normal standards programs of each CCSDS Agency and is applicable to those missions for which cross support based on capabilities described in this Recommended Standard is anticipated. Where mandatory capabilities are clearly indicated in sections of the Recommended Standard, they must be implemented when this document is used as a basis for cross support. Where options are allowed or implied, implementation of these options is subject to specific bilateral cross support agreements between the Agencies involved.

Documents
Document Sharing Hub
© ISO 2016 – All rights reserved
Full document details: BS ISO 22645:2016

1.4 RATIONALE

The CCSDS believes it is important to document the rationale underlying the recommendations chosen, so that future evaluations of proposed changes or improvements will not lose sight of previous decisions.

1.5 DOCUMENT STRUCTURE

This document is divided into six numbered sections and two annexes:

- Section 1 presents the purpose, scope, applicability and rationale of this Recommended Standard and lists the conventions, definitions, and references used throughout the Recommended Standard.
- Section 2 provides an overview of the TM Space Data Link Protocol.
- Section 3 defines the services provided by the protocol entity.
- Section 4 specifies the protocol data units and procedures employed by the protocol entity.
- Section 5 specifies the managed parameters used by the protocol entity.
- Section 6 specifies the protocol entity with support for the Space Data Link Security Protocol.
- Annex A lists all acronyms used within this document.
- Annex B provides a list of informative references.

1.6 CONVENTIONS AND DEFINITIONS

1.6.1 DEFINITIONS

1.6.1.1 Definitions from the Open Systems Interconnection (OSI) Basic Reference Model

This Recommended Standard makes use of a number of terms defined in reference [1]. The use of those terms in this Recommended Standard is to be understood in a generic sense, i.e., in the sense that those terms are generally applicable to any of a variety of technologies that provide for the exchange of information between real systems. Those terms are:

a) blocking;

b) connection;

c) Data Link Layer;

d) entity;

Documents
Document Sharing Hub
© ISO 2016 – All rights reserved
Full document details: BS ISO 22645:2016

e) flow control;

f) Network Layer;

g) peer entities;

h) Physical Layer;

i) protocol control information;

j) protocol data unit;

k) real system;

l) segmenting;

m) service;

n) Service Access Point (SAP);

o) SAP address;

p) service data unit.

1.6.1.2 Definitions from OSI Service Definition Conventions

This Recommended Standard makes use of a number of terms defined in reference [2]. The use of those terms in this Recommended Standard is to be understood in a generic sense, i.e., in the sense that those terms are generally applicable to any of a variety of technologies that provide for the exchange of information between real systems. Those terms are:

a) confirmation;

b) indication;

c) primitive;

d) request;

e) response;

f) service provider;

g) service user.

1.6.1.3 Terms Defined in This Recommended Standard

For the purposes of this Recommended Standard, the following definitions also apply. Many other terms that pertain to specific items are defined in the appropriate sections.

aperiodic: not *periodic* (see below).

Documents
Document Sharing Hub
© ISO 2016 – All rights reserved
Full document details: BS ISO 22645:2016

asynchronous: not *synchronous* (see below).

delimited: having a known (and finite) length; applies to data in the context of data handling.

Mission Phase: a period of a mission during which specified communications characteristics are fixed. The transition between two consecutive Mission Phases may cause an interruption of the communications services.

periodic: of or pertaining to a sequence of events in which each event occurs at a fixed time interval (within specified tolerance) after the previous event in the sequence.

Physical Channel: a stream of bits transferred over a space link in a single direction.

space link: a communications link between a spacecraft and its associated ground system or between two spacecraft. A space link consists of one or more Physical Channels in one or both directions.

synchronous: of or pertaining to a sequence of events occurring in a fixed time relationship (within specified tolerance) to another sequence of events. It should be noted that 'synchronous' does not necessarily imply 'periodic' or 'constant rate'.

(TM) Transfer Frame: The protocol data unit of the Telemetry (TM) Space Data Link Protocol.

1.6.2 NOMENCLATURE

1.6.2.1 Normative Text

The following conventions apply for the normative specifications in this Recommended Standard:

a) the words 'shall' and 'must' imply a binding and verifiable specification;

b) the word 'should' implies an optional, but desirable, specification;

c) the word 'may' implies an optional specification;

d) the words 'is', 'are', and 'will' imply statements of fact.

NOTE – These conventions do not imply constraints on diction in text that is clearly informative in nature.

1.6.2.2 Informative Text

In the normative sections of this document, informative text is set off from the normative specifications either in notes or under one of the following subsection headings:

Documents
Document Sharing Hub
© ISO 2016 – All rights reserved
Full document details: BS ISO 22645:2016

– Overview;

– Background;

– Rationale;

– Discussion.

1.6.3 CONVENTIONS

In this document, the following convention is used to identify each bit in an *N*-bit field. The first bit in the field to be transmitted (i.e., the most left justified when drawing a figure) is defined to be 'Bit 0'; the following bit is defined to be 'Bit 1' and so on up to 'Bit *N*–1'. When the field is used to express a binary value (such as a counter), the Most Significant Bit (MSB) shall be the first transmitted bit of the field, i.e., 'Bit 0' (see figure 1-1).

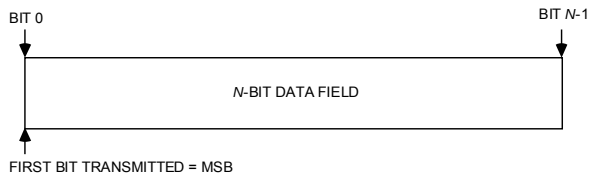

Figure 1-1: Bit Numbering Convention

In accordance with standard data-communications practice, data fields are often grouped into eight-bit 'words' which conform to the above convention. Throughout this Recommended Standard, such an eight-bit word is called an 'octet'.

The numbering for octets within a data structure starts with zero. By CCSDS convention, all 'spare' bits shall be permanently set to '0'.

© ISO 2016 – All rights reserved
Full document details: BS ISO 22645:2016

1.7 REFERENCES

The following publications contain provisions which, through reference in this text, constitute provisions of this document. At the time of publication, the editions indicated were valid. All publications are subject to revision, and users of this document are encouraged to investigate the possibility of applying the most recent editions of the publications indicated below. The CCSDS Secretariat maintains a register of currently valid CCSDS publications.

[1] *Information Technology—Open Systems Interconnection—Basic Reference Model: The Basic Model*. 2nd ed. International Standard, ISO/IEC 7498-1:1994. Geneva: ISO, 1994.

[2] *Information Technology—Open Systems Interconnection—Basic Reference Model—Conventions for the Definition of OSI Services*. International Standard, ISO/IEC 10731:1994. Geneva: ISO, 1994.

[3] *TM Synchronization and Channel Coding*. Issue 2. Recommendation for Space Data System Standards (Blue Book), CCSDS 131.0-B-2. Washington, D.C.: CCSDS, August 2011.

[4] *Flexible Advanced Coding and Modulation Scheme for High Rate Telemetry Applications*. Issue 1. Recommendation for Space Data System Standards (Blue Book), CCSDS 131.2-B-1. Washington, D.C.: CCSDS, March 2012.

[5] *CCSDS Space Link Protocols over ETSI DVB-S2 Standard*. Issue 1. Recommendation for Space Data System Standards (Blue Book), CCSDS 131.3-B-1. Washington, D.C.: CCSDS, March 2013.

[6] "Packet Version Number." Space Assigned Number Authority. http://sanaregistry.org/r/packet_version_number/.

[7] *CCSDS Global Spacecraft Identification Field Code Assignment Control Procedures*. Issue 6. Recommendation for Space Data System Standards (Blue Book), CCSDS 320.0-B-6. Washington, D.C.: CCSDS, October 2013.

[8] *Space Packet Protocol*. Issue 1. Recommendation for Space Data System Standards (Blue Book), CCSDS 133.0-B-1. Washington, D.C.: CCSDS, September 2003.

[9] *Encapsulation Service*. Issue 2. Recommendation for Space Data System Standards (Blue Book), CCSDS 133.1-B-2. Washington, D.C.: CCSDS, October 2009.

[10] *Space Data Link Security Protocol*. Issue 1. Recommendation for Space Data System Standards (Blue Book), CCSDS 355.0-B-1. Washington, D.C.: CCSDS, September 2015.

NOTE – Informative references are listed in annex B.

Documents
Document Sharing Hub
© ISO 2016 – All rights reserved
Full document details: BS ISO 22645:2016

2 OVERVIEW

2.1 CONCEPT OF TM SPACE DATA LINK PROTOCOL

2.1.1 ARCHITECTURE

The TM Space Data Link Protocol is a Data Link Layer protocol (see reference [1]) to be used by space missions. This protocol has been designed to meet the requirements of space missions for efficient transfer of space application data of various types and characteristics over space-to-ground or space-to-space communications links (hereafter called space links).

Figure 2-1 illustrates the relationship of this protocol to the Open Systems Interconnection (OSI) reference model (reference [1]). Two sublayers of the Data Link Layer are defined for CCSDS space link protocols as shown in reference [B2]. The TM Space Data Link Protocol corresponds to the Logical Link Sublayer, and provides functions of transferring various data using a fixed-length protocol data unit called the Transfer Frame. The optional Space Data Link Security Protocol (reference [10]) is provided within the Data Link Protocol Sublayer, as illustrated below. The Synchronization and Channel Coding Sublayer provides some additional functions necessary for transferring Transfer Frames over a space link. These functions are delimiting/synchronizing Transfer Frames, error-correction coding/decoding (optional), and bit transition generation/removal (optional). For the Synchronization and Channel Coding Sublayer, the set of TM Synchronization and Channel Coding Recommended Standards (references [3], [4], and [5]) must be used with the TM Space Data Link Protocol. How the TM Space Data Link Protocol is used in overall space data systems is shown in references [B2], [B3], and [B4].

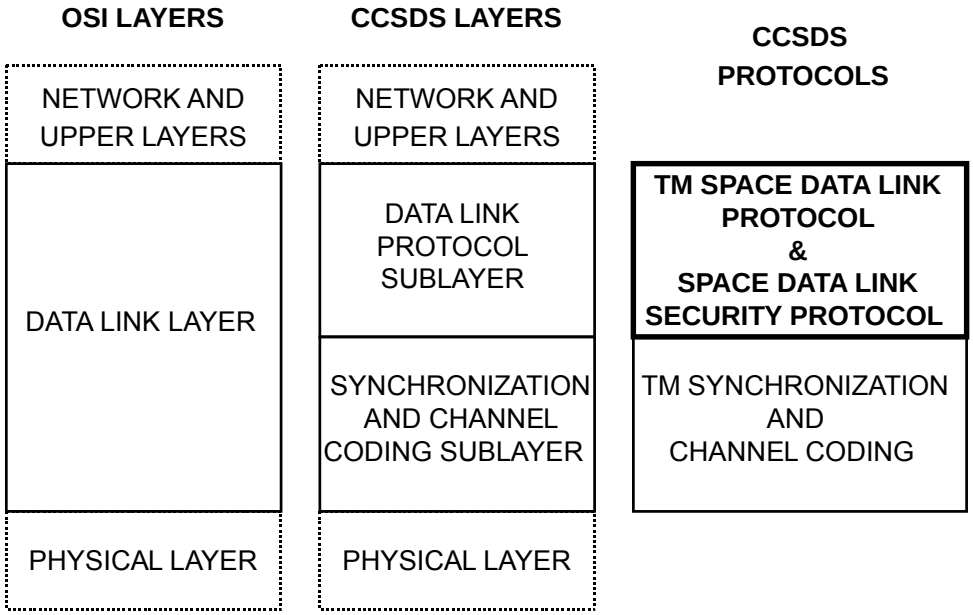

Figure 2-1: Relationship with OSI Layers

© ISO 2016 – All rights reserved
Documents Document Sharing Hub
Full document details: BS ISO 22645:2016

2.1.2 PROTOCOL FEATURES

2.1.2.1 Transfer Frames and Virtual Channels

The TM Space Data Link Protocol provides the users with several services to transfer service data units over a space link. To facilitate simple, reliable, and robust synchronization procedures, fixed-length protocol data units are used to transfer data through the weak-signal, noisy space links: their length is established for a particular Physical Channel (a single stream of bits transferred over a space link in a single direction) during a particular Mission Phase by management. These protocol data units are known as TM Transfer Frames (unless otherwise stated, the terms 'Transfer Frame' and 'Frame' in this document refer to the TM Transfer Frame). Each Transfer Frame contains a header which provides protocol control information, and a fixed-length data field within which higher-layer service data units are carried.

A key feature of the TM Space Data Link Protocol is the concept of 'Virtual Channels' (VC). The Virtual Channel facility allows one Physical Channel to be shared among multiple higher-layer data streams, each of which may have different service requirements. A single Physical Channel may therefore be divided into several separate logical data channels, each known as a 'Virtual Channel'. Each Transfer Frame transferred over a Physical Channel belongs to one of the Virtual Channels of the Physical Channel.

2.1.2.2 Optional Space Data Link Security Protocol

The Data Link Protocol Sublayer includes the Space Data Link Security (SDLS) Protocol specified in reference [10]. The SDLS protocol can provide security, such as authentication and confidentiality, for TM Transfer Frames. Support for the SDLS protocol is an optional feature of the TM Space Data Link Protocol.

NOTE – The introduction of the SDLS protocol makes no changes to any requirements in this Recommended Standard that apply to a TM Space Data Link Protocol that does not support the SDLS protocol.

The security provided by the SDLS protocol can vary between Virtual Channels. So, for example, there can be some Virtual Channels with security and some without. The type of security can vary from one Virtual Channel to another.

2.1.3 ADDRESSING

There are three identifier fields in the header of Transfer Frames: Transfer Frame Version Number (TFVN), Spacecraft Identifier (SCID), and Virtual Channel Identifier (VCID). The concatenation of a TFVN and a SCID is known as a Master Channel Identifier (MCID), and the concatenation of an MCID and a VCID is called a Global Virtual Channel Identifier (GVCID). Therefore,

MCID = TFVN + SCID;

Documents
Document Sharing Hub
© ISO 2016 – All rights reserved
Full document details: BS ISO 22645:2016

GVCID = MCID + VCID = TFVN + SCID + VCID.

Each Virtual Channel in a Physical Channel is identified by a GVCID. Therefore, a Virtual Channel consists of Transfer Frames with the same GVCID.

All Transfer Frames with the same MCID on a Physical Channel constitute a Master Channel (MC). A Master Channel consists of one or more Virtual Channels. In most cases, a Physical Channel carries only Transfer Frames of a single MCID, and the Master Channel will be identical with the Physical Channel. However, a Physical Channel may carry Transfer Frames with multiple MCIDs (with the same TFVN). In such a case, the Physical Channel consists of multiple Master Channels. A Physical Channel is identified with a Physical Channel Name, which is set by management and not included in the header of Transfer Frames.

The relationships between these Channels are shown in figure 2-2.

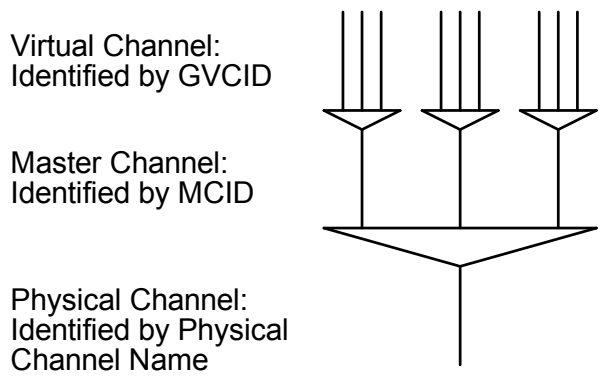

Figure 2-2: Relationships Between Channels

2.1.4 PROTOCOL DESCRIPTION

The TM Space Data Link Protocol is described in terms of:

a) the services provided to the users;

b) the protocol data units; and

c) the procedures performed by the protocol.

The service definitions are given in the form of primitives, which present an abstract model of the logical exchange of data and control information between the protocol entity and the service user. The definitions of primitives are independent of specific implementation approaches.

The procedure specifications define the procedures performed by protocol entities for the transfer of information between peer entities. The definitions of procedures are independent of specific implementation methods or technologies.

Documents
Document Sharing Hub
© ISO 2016 – All rights reserved
Full document details: BS ISO 22645:2016

This protocol specification also specifies the requirements for the underlying services provided by the Channel Coding Sublayer and the Physical Layer.

2.2 OVERVIEW OF SERVICES

2.2.1 COMMON FEATURES OF SERVICES

The TM Space Data Link Protocol provides users with data transfer services. The point at which a service is provided by a protocol entity to a user is called a Service Access Point (SAP) (see reference [1]). Each service user is identified by a SAP address.

Service data units submitted to a SAP are processed in the order of submission. No processing order is maintained for service data units submitted to different SAPs.

NOTE – Implementations may be required to perform flow control at a SAP between the service user and the service provider. However, CCSDS does not make any recommendations for a scheme for flow control between the user and the provider.

The followings are features common to all the services defined by this Recommended Standard:

a) unidirectional (one way) services: one end of a connection can send, but not receive, data through the space link, while the other end can receive, but not send;

b) unconfirmed services: the sending user does not receive confirmation from the receiving end that data has been received;

c) incomplete services: the services do not guarantee completeness, but some services may signal gaps in the sequence of service data units delivered to the receiving user;

d) sequence-preserving services: the sequence of service data units supplied by the sending user is preserved through the transfer over the space link, although there may be gaps and duplications in the sequence of service data units delivered to the receiving user.

NOTE – This Recommended Standard assumes that these services are provided at the end points of a space link. However, this Recommended Standard makes no assumptions concerning how these end points are composed or configured either on-board a spacecraft or in a ground system. In a ground system, the services defined by this Recommended Standard may be extended or enhanced with Space Link Extension Services (reference [B5]).

Documents
Document Sharing Hub
© ISO 2016 – All rights reserved
Full document details: BS ISO 22645:2016

2.2.2 SERVICE TYPES

2.2.2.1 Overview

The TM Space Data Link Protocol provides three service types (asynchronous, synchronous, and periodic) that determine how service data units supplied by the user are transferred in protocol data units over a space link.

The models shown below are intended only to illustrate the characteristics of services. They are not intended to guide or restrict design of on-board or ground systems.

2.2.2.2 Asynchronous Service

In asynchronous service, there are no timing relationships between the transfer of service data units supplied by the service user and the transmission of Transfer Frames generated by the service provider. The user may request data transfer at any time it desires, but there may be restrictions imposed by the service provider on the data generation rate. In this service (figure 2-3), each service data unit from a sending user is placed in a queue, the contents of which are sent to a receiving user in the order in which they were presented. Although transmission errors may prevent delivery of some data units, the service provider attempts to transfer all data units provided by the user exactly once. The timing of data transfer is determined by the provider in accordance with mission-specific rules, and may depend on the traffic at the time of transfer. The key feature of this service is that all of the service data units from the sending user are transferred, and transferred only once.

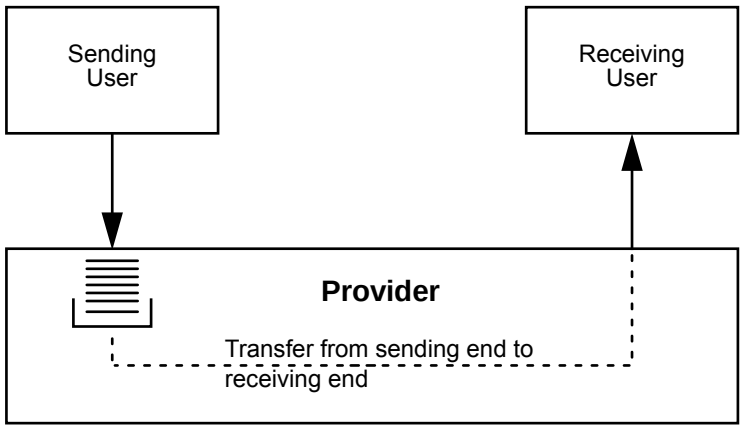

Figure 2-3: Asynchronous Service Model

2.2.2.3 Synchronous Service

In synchronous service, the transfer of service data units is synchronized with the release of either (1) Transfer Frames of a Virtual Channel, (2) Transfer Frames of a Master Channel, or (3) all Transfer Frames of a Physical Channel. The transfer timing may be periodic or aperiodic.

Documents
Document Sharing Hub
© ISO 2016 – All rights reserved
Full document details: BS ISO 22645:2016

In this service (figure 2-4), each service data unit from a sending user is placed in a buffer that can hold only one service data unit; the content of the buffer is sent to a receiving user at the time when a Transfer Frame is transmitted. The transmission timing of Transfer Frames is determined by the service provider according to mission-specific rules (usually known to the user). The key feature of this service, which is essentially time-division multiplexing, is that the timing of data transfer is driven by the transfer mechanism, not by individual service requests from the user. Thus a particular service data unit from a user might be sent once, several times (if the 'new' value is not placed in the buffer soon enough), or not at all (if one value is replaced by a second before the service provider can send it).

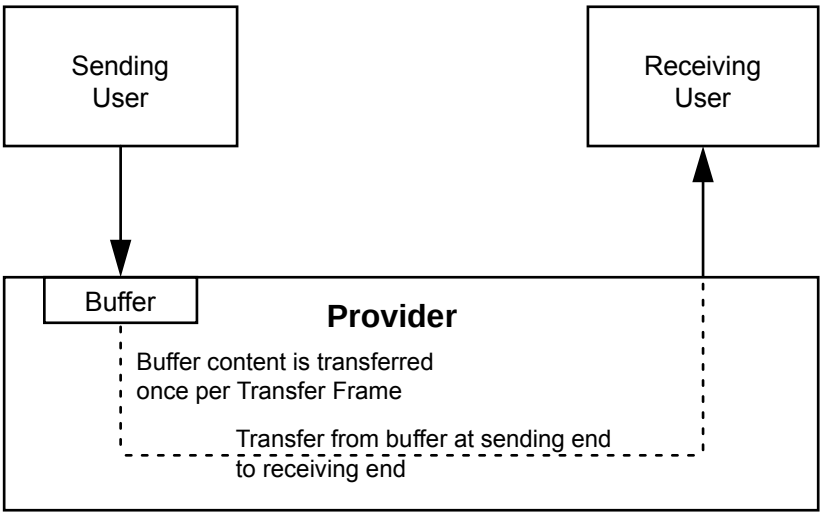

Figure 2-4: Synchronous Service Model

2.2.2.4 Periodic Service

Periodic service is a special case of synchronous service in which service data units are transferred at a constant rate. Periodic transfer from service interface to service interface is provided with a specified maximum delay and a specified maximum jitter at the service interface. There are three cases in which a synchronous service is periodic:

a) if the service is associated with a Virtual Channel (or a Master Channel), and that Virtual (or Master) Channel produces Transfer Frames at a constant rate, then the service is periodic;

b) if the service is associated with a Master Channel and there is only one Master Channel in the Physical Channel, then the service is periodic.

For periodic services, all service data units are sent only once if the user supplies service data units at the same rate as the rate at which the service provider transfers them.

Documents
Document Sharing Hub
© ISO 2016 – All rights reserved
Full document details: BS ISO 22645:2016

2.2.3 SUMMARY OF SERVICES

2.2.3.1 General

Eight services are provided by the TM Space Data Link Protocol. Five of them (Virtual Channel Packet, Virtual Channel Access, Virtual Channel Frame Secondary Header, Virtual Channel Operational Control Field, and Virtual Channel Frame) are provided for a Virtual Channel. Three of them (Master Channel Frame Secondary Header, Master Channel Operational Control Field, and Master Channel Frame) are provided for a Master Channel.

Table 2-1 summarizes these services and shows their characteristics and the Service Data Units (SDUs) that they transfer.

Table 2-1: Summary of Services Provided by TM Space Data Link Protocol

Service	Service Type	Service Data Unit	SAP Address
Virtual Channel Packet (VCP)	Asynchronous	Packet	GVCID + Packet Version Number
Virtual Channel Access (VCA)	Asynchronous or Periodic	VCA_SDU	GVCID
Virtual Channel Frame Secondary Header (VC_FSH)	Synchronous or Periodic	FSH_SDU	GVCID
Virtual Channel Operational Control Field (VC_OCF)	Synchronous or Periodic	OCF_SDU	GVCID
Virtual Channel Frame (VCF)	Asynchronous or Periodic	Transfer Frame	GVCID
Master Channel Frame Secondary Header (MC_FSH)	Synchronous or Periodic	FSH_SDU	MCID
Master Channel Operational Control Field (MC_OCF)	Synchronous or Periodic	OCF_SDU	MCID
Master Channel Frame (MCF)	Asynchronous or Periodic	Transfer Frame	MCID

† In this document, the term 'Packet Service' is used as an abbreviation for Virtual Channel Packet (VCP) Service.

Documents
Document Sharing Hub
© ISO 2016 – All rights reserved
Full document details: BS ISO 22645:2016

The optional SDLS protocol can provide security features for the SDUs transferred by the services:

– encryption, to provide confidentiality by hiding data content;

– authentication, to confirm the source and integrity of the data.

The available level of security features varies between the services. Table 2-2 shows the security features available for an SDU of each service when the two features are applied singly or together.

Table 2-2: Summary of TM Services Supported by the Space Data Link Security Protocol

TM Service	Only SDLS Authentication Applied	Only SDLS Encryption Applied	SDLS Authenticated Encryption Applied
Virtual Channel Packet (VCP)	SDU Protected	SDU Protected	SDU Protected
Virtual Channel Access (VCA)	SDU Protected	SDU Protected	SDU Protected
Virtual Channel Frame Secondary Header (VC_FSH)	SDU Protected	SDU Not protected	SDU Authenticated only
Virtual Channel Operational Control Field (VC_OCF)	SDU Not protected	SDU Not protected	SDU Not protected
Virtual Channel Frame (VCF)	SDU Not protected	SDU Not protected	SDU Not protected
Master Channel Frame Secondary Header (MC_FSH)	SDU Not protected	SDU Not protected	SDU Not protected
Master Channel Operational Control Field (MC_OCF)	SDU Not protected	SDU Not protected	SDU Not protected
Master Channel Frame (MCF)	SDU Not protected	SDU Not protected	SDU Not protected

2.2.3.2 Virtual Channel Packet (VCP) Service

The Virtual Channel Packet (VCP) Service transfers a sequence of variable-length, delimited, octet-aligned service data units known as Packets across a space link. The Packets transferred by this service must have a Packet Version Number (PVN) authorized by CCSDS. Packet

Documents
Document Sharing Hub
© ISO 2016 – All rights reserved
Full document details: BS ISO 22645:2016

Version Numbers presently authorized by CCSDS are defined in reference [6]. The service is unidirectional, asynchronous and sequence-preserving. It does not guarantee completeness, nor does it signal gaps in the sequence of service data units delivered to a receiving user.

A user of this service is a protocol entity that sends or receives Packets with a single PVN. A user is identified with the PVN and a GVCID. Different users (i.e., Packets with different versions) can share a single Virtual Channel, and if there are multiple users on a Virtual Channel, the service provider multiplexes Packets of different versions to form a single stream of Packets to be transferred on that Virtual Channel.

2.2.3.3 Virtual Channel Access (VCA) Service

The Virtual Channel Access (VCA) Service provides transfer of a sequence of privately formatted service data units of fixed length, along with status fields, across a space link. The service is unidirectional, either asynchronous or periodic, and sequence-preserving. The service does not guarantee completeness but may signal gaps in the sequence of service data units delivered to the receiving user.

For a given service instance, only one user, identified with the GVCID of the Virtual Channel, can use this service on a Virtual Channel. Service data units from different users are not multiplexed together within one Virtual Channel.

2.2.3.4 Virtual Channel Frame Secondary Header (VC_FSH) Service

The Virtual Channel Frame Secondary Header (VC_FSH) Service provides synchronous transfer of fixed-length data units in the Transfer Frame Secondary Header (FSH) of Transfer Frames of a Virtual Channel. The service is unidirectional and sequence-preserving. The transfer is synchronized with the release of Transfer Frames of a Virtual Channel. The service does not guarantee completeness but may signal gaps in the sequence of service data units delivered to the receiving user.

For a given service instance only one user, identified with the GVCID of the Virtual Channel, can use this service on a Virtual Channel. Service data units from different users are not multiplexed together within one Virtual Channel.

2.2.3.5 Virtual Channel Operational Control Field (VC_OCF) Service

The Virtual Channel Operational Control Field (VC_OCF) Service provides synchronous transfer of fixed-length data units, each consisting of four octets, in the Operational Control Field (OCF) of Transfer Frames of a Virtual Channel. The service is unidirectional and sequence-preserving. The transfer is synchronized with the release of Transfer Frames of a Virtual Channel. The service does not guarantee completeness, but it may signal gaps in the sequence of service data units delivered to the receiving user.

Documents
Document Sharing Hub
© ISO 2016 – All rights reserved
Full document details: BS ISO 22645:2016

For a given service instance only one user, identified with the GVCID of the Virtual Channel, can use this service on a Virtual Channel. Service data units from different users are not multiplexed together within one Virtual Channel.

2.2.3.6 Virtual Channel Frame (VCF) Service

The Virtual Channel Frame (VCF) Service provides transfer of a sequence of fixed-length TM Transfer Frames of a Virtual Channel, created by an independent protocol entity, across a space link. The service is unidirectional, either asynchronous or periodic, and sequence-preserving. The service does not guarantee completeness, but it may signal gaps in the sequence of service data units delivered to the receiving user.

For a given service instance only one user, identified with the GVCID of the Virtual Channel, can use this service on a Virtual Channel. Service data units from different users are not multiplexed together within one Virtual Channel.

The Virtual Channel Frame Service transfers the independently created TM Transfer Frames through a space link, together with TM Transfer Frames created by the service provider itself. This service is made available to trusted users who are certified during the design process to ensure that the independently created protocol data units do not violate the operational integrity of the space link. Necessarily, the independent Transfer Frames must have the same length as those generated by the service provider.

2.2.3.7 Master Channel Frame Secondary Header (MC_FSH) Service

The Master Channel Frame Secondary Header (MC_FSH) Service provides synchronous transfer of fixed-length data units in the Transfer Frame Secondary Header (FSH) of Transfer Frames of a Master Channel. The service is unidirectional and sequence-preserving. The transfer is synchronized with the release of Transfer Frames of a Master Channel. The service does not guarantee completeness, but may signal gaps in the sequence of service data units delivered to a receiving user.

Only one user can use this service on a Master Channel, and the user is identified with the MCID of the Master Channel. Service data units from different users are not multiplexed together within one Master Channel.

2.2.3.8 Master Channel Operational Control Field (MC_OCF) Service

The Master Channel Operational Control Field (MC_OCF) Service provides synchronous transfer of fixed-length data units, each consisting of four octets, in the Operational Control Field (OCF) of Transfer Frames of a Master Channel. The service is unidirectional and sequence-preserving. The transfer is synchronized with the release of Transfer Frames of a Master Channel. The service does not guarantee completeness, but may signal gaps in the sequence of service data units delivered to a receiving user.

Documents
Document Sharing Hub
© ISO 2016 – All rights reserved
Full document details: BS ISO 22645:2016

Only one user can use this service on a Master Channel, and the user is identified with the MCID of the Master Channel. Service data units from different users are not multiplexed together within one Master Channel.

2.2.3.9 Master Channel Frame (MCF) Service

The Master Channel Frame (MCF) Service provides transfer of a sequence of fixed-length TM Transfer Frames of a Master Channel, created by an independent protocol entity, across a space link. The service is unidirectional, either asynchronous or periodic, and sequence-preserving. The service does not guarantee completeness, but it may signal gaps in the sequence of service data units delivered to a receiving user.

Only one user can use this service on a Master Channel, and the user is identified with the MCID of the Master Channel. Service data units from different users are not multiplexed together within one Master Channel.

The Master Channel Frame Service transfers the independently created TM Transfer Frames through the space link, together with TM Transfer Frames created by the service provider itself. This service is made available to trusted users who are certified during the design process to ensure that the independently created protocol data units do not violate the operational integrity of the space link. Necessarily, the independent Transfer Frames must have the same length as those generated by the service provider.

2.2.4 RESTRICTIONS ON SERVICES

There are some restrictions on the services provided on a Physical Channel:

a) if the Master Channel Frame Service exists on a Master Channel, other services shall not exist simultaneously on that Master Channel;

b) on one Master Channel, the Virtual Channel Frame Secondary Header Service shall not exist simultaneously with the Master Channel Frame Secondary Header Service;

c) on one Master Channel, the Virtual Channel Operational Control Field Service shall not exist simultaneously with the Master Channel Operational Control Field Service;

d) if the Virtual Channel Frame Service exists on a Virtual Channel, other services shall not exist simultaneously on that Virtual Channel;

e) on one Virtual Channel, the Virtual Channel Packet (VCP) Service shall not exist simultaneously with the Virtual Channel Access Service.

Documents
Document Sharing Hub
© ISO 2016 – All rights reserved
Full document details: BS ISO 22645:2016

2.3 OVERVIEW OF FUNCTIONS

2.3.1 GENERAL FUNCTIONS

The TM Space Data Link Protocol transfers various service data units supplied by sending users encapsulated in a sequence of protocol data units using services of lower layers. The protocol data units, known as TM Transfer Frames, have a fixed length and must be transferred over a Physical Channel at a constant rate.

The protocol entity performs the following protocol functions:

a) generation and processing of protocol control information (i.e., headers and trailers) to perform data identification, loss detection, and error detection;

b) segmenting and blocking of service data units to transfer variable-length service data units in fixed-length protocol data units;

c) multiplexing/demultiplexing and commutation/decommutation in order for various service users to share a single Physical Channel;

d) generation and removal of idle data to transfer protocol data units at a constant rate.

If the protocol entity supports the optional SDLS protocol, then it uses the functions of SDLS to apply the configured security features.

The protocol entity does not perform the following protocol functions:

a) connection establishment and release;

b) flow control;

c) retransmission of protocol data units;

d) management or configuration of the SDLS protocol.

2.3.2 INTERNAL ORGANIZATION OF PROTOCOL ENTITY

Figures 2-5 and 2-6 show the internal organization of the protocol entity of the sending and receiving ends, respectively. Data flow from top to bottom in figure 2-5, and from bottom to top in figure 2-6. These figures identify data-handling functions performed by the protocol entity and show logical relationships among these functions. The figures are not intended to imply any hardware or software configuration in a real system. Depending on the services actually used for a real system, not all of the functions may be present in the protocol entity.

Documents
Document Sharing Hub
© ISO 2016 – All rights reserved
Full document details: BS ISO 22645:2016

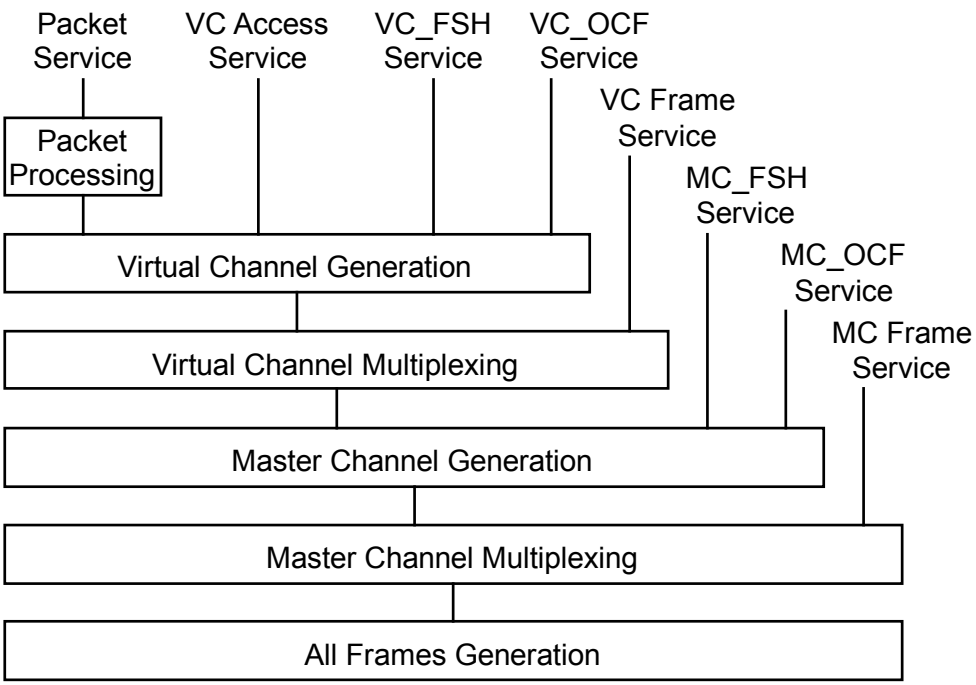

Figure 2-5: Internal Organization of Protocol Entity (Sending End)

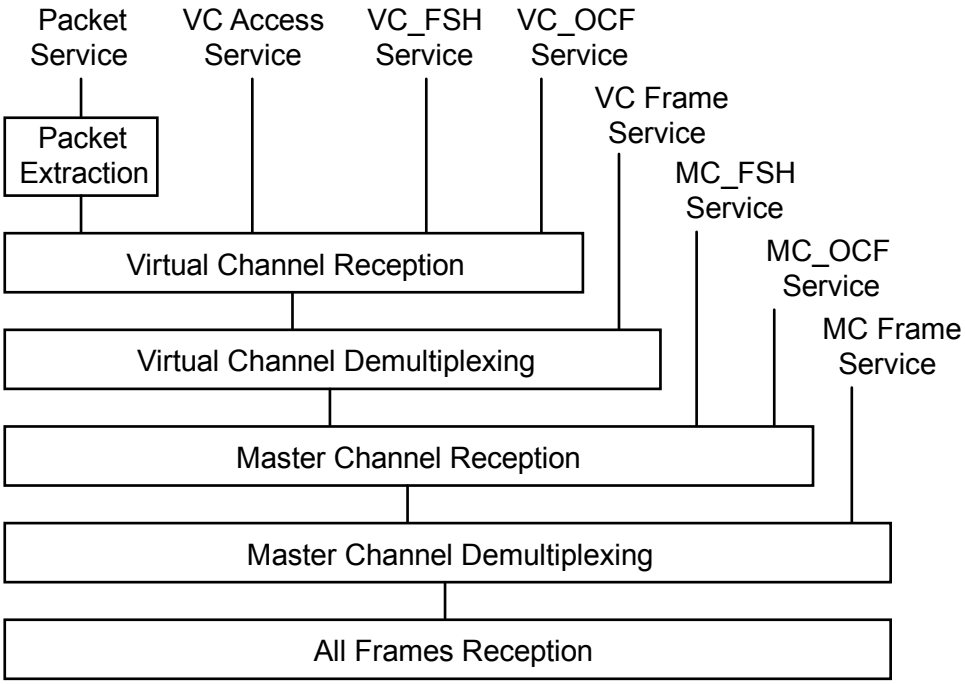

Figure 2-6: Internal Organization of Protocol Entity (Receiving End)

By extracting multiplexing/demultiplexing and commutation/decommutation functions from figures 2-5 and 2-6, the relationship among various data units can be shown as figure 2-7, which is known as the Channel Tree of the TM Space Data Link Protocol.

Documents
Document Sharing Hub
© ISO 2016 – All rights reserved
Full document details: BS ISO 22645:2016

In figure 2-7, multiplexing (shown with a triangle) is a function of mixing, according to an algorithm established by the project, multiple streams of data units, each with a different identifier, to generate a single stream of data units. Commutation (shown with a box) is a function of concatenating, according to the formatting rule specified by the protocol definition, multiple data units, each from a different service, in a single protocol data unit sharing the same identifier.

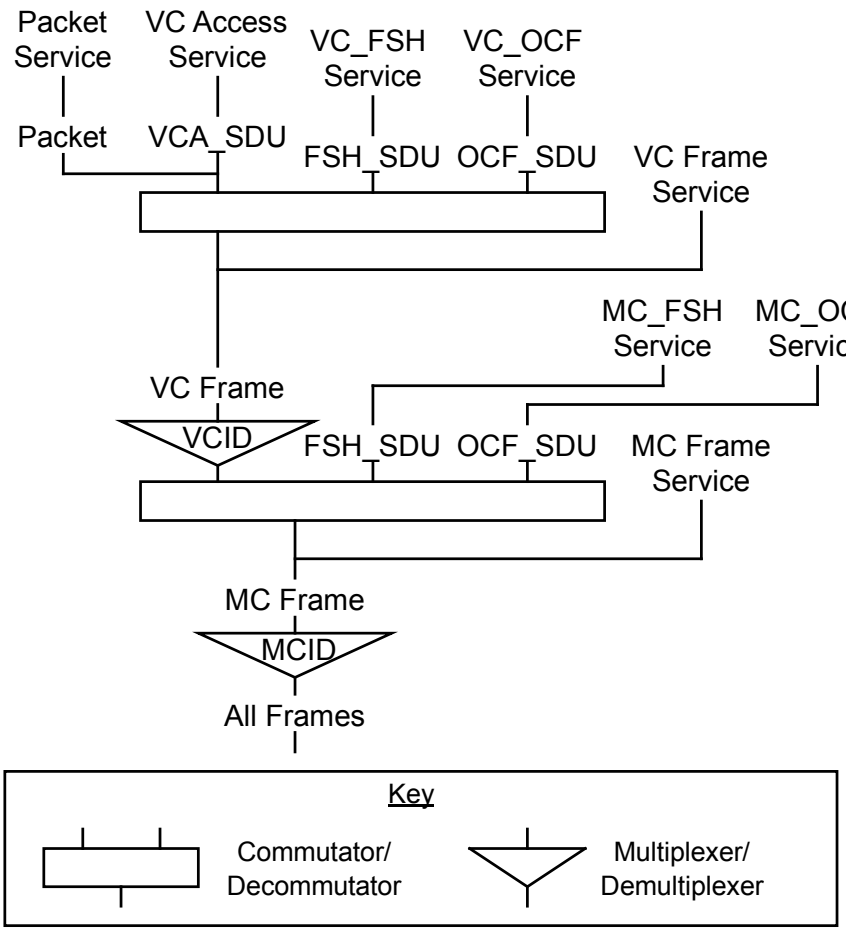

Figure 2-7: TM Space Data Link Protocol Channel Tree

2.4 SERVICES ASSUMED FROM LOWER LAYERS

2.4.1 SERVICES ASSUMED FROM THE SYNCHRONIZATION AND CHANNEL CODING SUBLAYER

As described in 2.1.1, the set of TM Synchronization and Channel Coding Recommended Standards (references [3], [4], and [5]) must be used with the TM Space Data Link Protocol as the Synchronization and Channel Coding Sublayer specification. The functions provided by the TM Synchronization and Channel Coding Recommended Standard are as follows:

a) error control encoding and decoding functions (optional);

Documents
Document Sharing Hub
© ISO 2016 – All rights reserved
Full document details: BS ISO 22645:2016

b) bit transition generation and removal functions (optional);

c) delimiting and synchronizing functions.

The Synchronization and Channel Coding Sublayer, then, transfers contiguous, fixed-length, delimited protocol data units as a contiguous stream of bits over a space link using the services of the underlying Physical Layer.

2.4.2 PERFORMANCE REQUIREMENTS TO LOWER LAYERS

The coding options of the TM Channel Coding and Synchronization Recommended Standard and the performance of the RF link provided by the Physical Layer shall be chosen according to the following criteria:

a) the probability of misidentifying the MCID and VCID shall be less than a mission-specified value;

b) the probability of not correctly extracting Packets from Transfer Frames using the First Header Pointer and the Packet Length Field shall be less than a mission-specified value.

In order to assure correct decoding at the receiving end, the same coding options must be applied to all Transfer Frames of a Physical Channel.

Documents
Document Sharing Hub
© ISO 2016 – All rights reserved
Full document details: BS ISO 22645:2016

Documents
Document Sharing Hub

© ISO 2016 – All rights reserved
Full document details: BS ISO 22645:2016