BS ISO 22664:2016

BSI Standards Publication

Space data and information transfer systems — TC (telecommand) space data link protocol

Documents
Document Sharing Hub

Full document details: BS ISO 22664:2016

National foreword

This British Standard is the UK implementation of ISO 22664:2016. It supersedes BS ISO 22664:2013+A1:2015 which is withdrawn.

The UK participation in its preparation was entrusted to Technical Committee ACE/68, Space systems and operations.

A list of organizations represented on this committee can be obtained on request to its secretary.

This publication does not purport to include all the necessary provisions of a contract. Users are responsible for its correct application.

© The British Standards Institution 2016.
Published by BSI Standards Limited 2016

ISBN 978 0 580 93375 2

ICS 49.140

Compliance with a British Standard cannot confer immunity from legal obligations.

This British Standard was published under the authority of the Standards Policy and Strategy Committee on 30 November 2016.

Amendments/Corrigenda issued since publication

Date	Text affected

Documents
Document Sharing Hub

Full document details: BS ISO 22664:2016

INTERNATIONAL STANDARD

ISO 22664

Third edition
2016-11-15

Space data and information transfer systems — TC (telecommand) space data link protocol

Systèmes de transfert des données et informations spatiales — Protocole de liaison pour données spatiales TC (télécommande)

Reference number
ISO 22664:2016(E)

Documents
Document Sharing Hub

© ISO 2016

Full document details: BS ISO 22664:2016

COPYRIGHT PROTECTED DOCUMENT

© ISO 2016

All rights reserved. Unless otherwise specified, no part of this publication may be reproduced or utilized otherwise in any form or by any means, electronic or mechanical, including photocopying, or posting on the internet or an intranet, without prior written permission. Permission can be requested from either ISO at the address below or ISO's member body in the country of the requester.

ISO copyright office
Ch. de Blandonnet 8 • CP 401
CH-1214 Vernier, Geneva, Switzerland
Tel. + 41 22 749 01 11
Fax + 41 22 749 09 47
copyright@iso.org
Web www.iso.org

Published in Switzerland

© ISO 2016 – All rights reserved

Documents
Document Sharing Hub

Full document details: BS ISO 22664:2016

Foreword

ISO (the International Organization for Standardization) is a worldwide federation of national standards bodies (ISO member bodies). The work of preparing International Standards is normally carried out through ISO technical committees. Each member body interested in a subject for which a technical committee has been established has the right to be represented on that committee. International organizations, governmental and non-governmental, in liaison with ISO, also take part in the work. ISO collaborates closely with the International Electrotechnical Commission (IEC) on all matters of electrotechnical standardization.

The procedures used to develop this document and those intended for its further maintenance are described in the ISO/IEC Directives, Part 1. In particular the different approval criteria needed for the different types of ISO documents should be noted. This document was drafted in accordance with the editorial rules of the ISO/IEC Directives, Part 2. www.iso.org/directives

Attention is drawn to the possibility that some of the elements of this document may be the subject of patent rights. ISO shall not be held responsible for identifying any or all such patent rights. Details of any patent rights identified during the development of the document will be in the Introduction and/or on the ISO list of patent declarations received. www.iso.org/patents

Any trade name used in this document is information given for the convenience of users and does not constitute an endorsement.

For an explanation on the meaning of ISO specific terms and expressions related to conformity assessment, as well as information about ISO's adherence to the WTO principles in the Technical Barriers to Trade (TBT) see the following URL: Foreword - Supplementary information

ISO 22664 was prepared by the Consultative Committee for Space Data Systems (CCSDS) (as CCSDS 232.0-B-3, September 2015) and was adopted (without modifications except those stated in clause 2 of this International Standard) by Technical Committee ISO/TC 20, *Aircraft and space vehicles*, Subcommittee SC 13, *Space data and information transfer systems*.

This third edition cancels and replaces the second edition (ISO 22664:2013), which has been technically revised. It also incorporates the amendment ISO 22664:2013/Amd.1:2015.

© ISO 2016 – All rights reserved

Documents
Document Sharing Hub
Full document details: BS ISO 22664:2016

STATEMENT OF INTENT

The Consultative Committee for Space Data Systems (CCSDS) is an organization officially established by the management of its members. The Committee meets periodically to address data systems problems that are common to all participants, and to formulate sound technical solutions to these problems. Inasmuch as participation in the CCSDS is completely voluntary, the results of Committee actions are termed **Recommended Standards** and are not considered binding on any Agency.

This **Recommended Standard** is issued by, and represents the consensus of, the CCSDS members. Endorsement of this **Recommendation** is entirely voluntary. Endorsement, however, indicates the following understandings:

- Whenever a member establishes a CCSDS-related **standard**, this **standard** will be in accord with the relevant **Recommended Standard**. Establishing such a **standard** does not preclude other provisions which a member may develop.
- Whenever a member establishes a CCSDS-related **standard**, that member will provide other CCSDS members with the following information:
  - The **standard** itself.
  - The anticipated date of initial operational capability.
  - The anticipated duration of operational service.
- Specific service arrangements shall be made via memoranda of agreement. Neither this **Recommended Standard** nor any ensuing **standard** is a substitute for a memorandum of agreement.

No later than five years from its date of issuance, this **Recommended Standard** will be reviewed by the CCSDS to determine whether it should: (1) remain in effect without change; (2) be changed to reflect the impact of new technologies, new requirements, or new directions; or (3) be retired or canceled.

In those instances when a new version of a **Recommended Standard** is issued, existing CCSDS-related member standards and implementations are not negated or deemed to be non-CCSDS compatible. It is the responsibility of each member to determine when such standards or implementations are to be modified. Each member is, however, strongly encouraged to direct planning for its new standards and implementations towards the later version of the Recommended Standard.

Documents
Document Sharing Hub
© ISO 2016 – All rights reserved
Full document details: BS ISO 22664:2016

FOREWORD

This document is a technical Recommendation for use in developing flight and ground systems for space missions and has been prepared by the Consultative Committee for Space Data Systems (CCSDS). The TC Space Data Link Protocol described herein is intended for missions that are cross-supported between Agencies of the CCSDS.

Attention is drawn to the possibility that some of the elements of this document may be the subject of patent rights. CCSDS has processes for identifying patent issues and for securing from the patent holder agreement that all licensing policies are reasonable and non-discriminatory. However, CCSDS does not have a patent law staff, and CCSDS shall not be held responsible for identifying any or all such patent rights.

Through the process of normal evolution, it is expected that expansion, deletion, or modification of this document may occur. This Recommended Standard is therefore subject to CCSDS document management and change control procedures, which are defined in *Organization and Processes for the Consultative Committee for Space Data Systems* (CCSDS A02.1-Y-4). Current versions of CCSDS documents are maintained at the CCSDS Web site:

http://www.ccsds.org/

Questions relating to the contents or status of this document should be sent to the CCSDS Secretariat at the e-mail address indicated on page i.

Documents
Document Sharing Hub
© ISO 2016 – All rights reserved
Full document details: BS ISO 22664:2016

At time of publication, the active Member and Observer Agencies of the CCSDS were:

Member Agencies

- Agenzia Spaziale Italiana (ASI)/Italy.
- Canadian Space Agency (CSA)/Canada.
- Centre National d'Etudes Spatiales (CNES)/France.
- China National Space Administration (CNSA)/People's Republic of China.
- Deutsches Zentrum für Luft- und Raumfahrt (DLR)/Germany.
- European Space Agency (ESA)/Europe.
- Federal Space Agency (FSA)/Russian Federation.
- Instituto Nacional de Pesquisas Espaciais (INPE)/Brazil.
- Japan Aerospace Exploration Agency (JAXA)/Japan.
- National Aeronautics and Space Administration (NASA)/USA.
- UK Space Agency/United Kingdom.

Observer Agencies

- Austrian Space Agency (ASA)/Austria.
- Belgian Federal Science Policy Office (BFSPO)/Belgium.
- Central Research Institute of Machine Building (TsNIIMash)/Russian Federation.
- China Satellite Launch and Tracking Control General, Beijing Institute of Tracking and Telecommunications Technology (CLTC/BITTT)/China.
- Chinese Academy of Sciences (CAS)/China.
- Chinese Academy of Space Technology (CAST)/China.
- Commonwealth Scientific and Industrial Research Organization (CSIRO)/Australia.
- Danish National Space Center (DNSC)/Denmark.
- Departamento de Ciência e Tecnologia Aeroespacial (DCTA)/Brazil.
- Electronics and Telecommunications Research Institute (ETRI)/Korea.
- European Organization for the Exploitation of Meteorological Satellites (EUMETSAT)/Europe.
- European Telecommunications Satellite Organization (EUTELSAT)/Europe.
- Geo-Informatics and Space Technology Development Agency (GISTDA)/Thailand.
- Hellenic National Space Committee (HNSC)/Greece.
- Indian Space Research Organization (ISRO)/India.
- Institute of Space Research (IKI)/Russian Federation.
- KFKI Research Institute for Particle & Nuclear Physics (KFKI)/Hungary.
- Korea Aerospace Research Institute (KARI)/Korea.
- Ministry of Communications (MOC)/Israel.
- National Institute of Information and Communications Technology (NICT)/Japan.
- National Oceanic and Atmospheric Administration (NOAA)/USA.
- National Space Agency of the Republic of Kazakhstan (NSARK)/Kazakhstan.
- National Space Organization (NSPO)/Chinese Taipei.
- Naval Center for Space Technology (NCST)/USA.
- Scientific and Technological Research Council of Turkey (TUBITAK)/Turkey.
- South African National Space Agency (SANSA)/Republic of South Africa.
- Space and Upper Atmosphere Research Commission (SUPARCO)/Pakistan.
- Swedish Space Corporation (SSC)/Sweden.
- Swiss Space Office (SSO)/Switzerland.
- United States Geological Survey (USGS)/USA.

Documents
Document Sharing Hub
© ISO 2016 – All rights reserved
Full document details: BS ISO 22664:2016

DOCUMENT CONTROL

Document	Title	Date	Status
CCSDS 232.0-B-1	TC Space Data Link Protocol, Recommended Standard, Issue 1	September 2003	Original Issue, superseded
CCSDS 232.0-B-2	TC Space Data Link Protocol, Recommended Standard, Issue 2	September 2010	Issue 2, superseded
CCSDS 232.0-B-3	TC Space Data Link Protocol, Recommended Standard, Issue 3	September 2015	Current issue: – adds specifications to support the Space Data Link Security Protocol; – removes obsolete informative annex detailing changes from Historical Recommendation CCSDS 202.0-B-3-S (1987–2005).

NOTE – Substantive changes from the previous issue are marked by change bars in the inside margin.

Documents
Document Sharing Hub
© ISO 2016 – All rights reserved
Full document details: BS ISO 22664:2016

CONTENTS

Section Page

1 INTRODUCTION 1-1

1.1 PURPOSE 1-1
1.2 SCOPE 1-1
1.3 APPLICABILITY 1-1
1.4 RATIONALE 1-2
1.5 DOCUMENT STRUCTURE 1-2
1.6 CONVENTIONS AND DEFINITIONS 1-2
1.7 REFERENCES 1-5

2 OVERVIEW 2-1

2.1 CONCEPT OF TC SPACE DATA LINK PROTOCOL 2-1
2.2 OVERVIEW OF SERVICES 2-5
2.3 OVERVIEW OF FUNCTIONS 2-12
2.4 SERVICES ASSUMED FROM LOWER LAYERS 2-16

3 SERVICE DEFINITION 3-1

3.1 OVERVIEW 3-1
3.2 SOURCE DATA 3-1
3.3 MAP PACKET SERVICE 3-3
3.4 VIRTUAL CHANNEL PACKET SERVICE 3-9
3.5 MAP ACCESS SERVICE 3-15
3.6 VIRTUAL CHANNEL ACCESS SERVICE 3-20
3.7 VIRTUAL CHANNEL FRAME SERVICE 3-25
3.8 MASTER CHANNEL FRAME SERVICE 3-28
3.9 COP MANAGEMENT SERVICE 3-31

4 PROTOCOL SPECIFICATION WITHOUT SDLS OPTION 4-1

4.1 PROTOCOL DATA UNIT (TC TRANSFER FRAME) 4-1
4.2 PROTOCOL DATA UNIT (CLCW) 4-12
4.3 PROTOCOL PROCEDURES AT THE SENDING END 4-18
4.4 PROTOCOL PROCEDURES AT THE RECEIVING END 4-28

5 MANAGED PARAMETERS WITHOUT SDLS OPTION 5-1

5.1 MANAGED PARAMETERS FOR A PHYSICAL CHANNEL 5-1
5.2 MANAGED PARAMETERS FOR A MASTER CHANNEL 5-2
5.3 MANAGED PARAMETERS FOR A VIRTUAL CHANNEL 5-2

Documents
Document Sharing Hub
© ISO 2016 – All rights reserved
Full document details: BS ISO 22664:2016

CONTENTS (continued)

Section Page

5.4 MANAGED PARAMETERS FOR A MAP CHANNEL 5-4
5.5 MANAGED PARAMETERS FOR PACKET TRANSFER 5-4

6 PROTOCOL SPECIFICATION WITH SDLS OPTION 6-1

6.1 OVERVIEW 6-1
6.2 USE OF SDLS PROTOCOL 6-1
6.3 TC TRANSFER FRAME WITH SDLS 6-1
6.4 SENDING-END PROTOCOL PROCEDURES WITH SDLS 6-5
6.5 RECEIVING-END PROTOCOL PROCEDURES WITH SDLS 6-8
6.6 ADDITIONAL MANAGED PARAMETERS FOR SDLS 6-11

ANNEX A ACRONYMS (INFORMATIVE) A-1
ANNEX B INFORMATIVE REFERENCES (INFORMATIVE) B-1

Figure

1-1 Bit Numbering Convention 1-5
2-1 Relationship with OSI Layers 2-1
2-2 Relationships Between Channels 2-4
2-3 Internal Organization of Protocol Entity (Sending End) 2-13
2-4 Internal Organization of Protocol Entity (Receiving End) 2-13
2-5 TC Space Data Link Protocol Channel Tree 2-14
4-1 TC Transfer Frame Structural Components 4-1
4-2 Transfer Frame Primary Header 4-2
4-3 Segment Header 4-7
4-4 Logic Diagram of the Encoder 4-11
4-5 Logic Diagram of the Decoder 4-12
4-6 Communications Link Control Word 4-13
4-7 Internal Organization of Protocol Entity (Sending End) 4-18
4-8 Abstract Model of MAP Packet Processing Function 4-20
4-9 Example of MAP Packet Processing Procedures 4-20
4-10 Abstract Model of MAP Generation Function 4-21
4-11 Example of MAP Generation Procedures 4-21
4-12 Abstract Model of MAP Multiplexing Function 4-22
4-13 Abstract Model of VC Packet Processing Function 4-23
4-14 Example of VC Packet Processing Procedures 4-23
4-15 Abstract Model of Virtual Channel Generation Function 4-24
4-16 Abstract Model of Virtual Channel Multiplexing Function 4-25
4-17 Abstract Model of Master Channel Multiplexing Function 4-26

Documents
Document Sharing Hub
© ISO 2016 – All rights reserved
Full document details: BS ISO 22664:2016

CONTENTS (continued)

Figure Page

4-18 Abstract Model of All Frames Generation Function 4-27
4-19 Internal Organization of Protocol Entity (Receiving End) 4-28
4-20 Abstract Model of MAP Packet Extraction Function 4-29
4-21 Abstract Model of MAP Reception Function 4-30
4-22 Abstract Model of MAP Demultiplexing Function 4-30
4-23 Abstract Model of VC Packet Extraction Function 4-31
4-24 Abstract Model of Virtual Channel Reception Function 4-32
4-25 Abstract Model of Virtual Channel Demultiplexing Function 4-33
4-26 Abstract Model of Master Channel Demultiplexing Function 4-34
4-27 Abstract Model of All Frames Reception Function 4-35
6-1 SDLS Fields in a Type-D Transfer Frame with a Segment Header 6-2
6-2 SDLS Fields in a Type-D Transfer Frame without a Segment Header 6-2
6-3 Order of Processing between TC, COP-1, and SDLS Functions 6-6

Table

2-1 Summary of Services Provided by TC Space Data Link Protocol 2-8
4-1 Interpretation of the Bypass and Control Command Flags 4-4
4-2 Interpretation of the Sequence Flags 4-8
5-1 Managed Parameters for a Physical Channel 5-1
5-2 Managed Parameters for a Master Channel 5-2
5-3 Managed Parameters for a Virtual Channel 5-3
5-4 Managed Parameters for a MAP Channel 5-4
5-5 Managed Parameters for Packet Transfer 5-4
6-1 Additional Managed Parameters for a Virtual Channel without Segment Headers When TC Space Data Link Protocol Supports SDLS 6-11
6-2 Additional Managed Parameters for a MAP When TC Space Data Link Protocol Supports SDLS 6-11

Documents
Document Sharing Hub
© ISO 2016 – All rights reserved
Full document details: BS ISO 22664:2016

1 INTRODUCTION

1.1 PURPOSE

The purpose of this Recommended Standard is to specify the Telecommand (TC) Space Data Link Protocol. This protocol is a Data Link Layer protocol (see reference [1]) to be used over ground-to-space or space-to-space communications links by space missions.

1.2 SCOPE

This Recommended Standard defines the TC Space Data Link Protocol in terms of:

a) the services provided to the users of this protocol;

b) the protocol data units employed by the protocol; and

c) the procedures performed by the protocol.

It does not specify:

a) individual implementations or products;

b) the implementation of service interfaces within real systems;

c) the methods or technologies required to perform the procedures; or

d) the management activities required to configure and control the protocol.

1.3 APPLICABILITY

This Recommended Standard applies to the creation of Agency standards and to future data communications over space links between CCSDS Agencies in cross-support situations. The Recommended Standard includes comprehensive specification of the services and protocol for inter-Agency cross support. It is neither a specification of, nor a design for, real systems that may be implemented for existing or future missions.

The Recommended Standard specified in this document is to be invoked through the normal standards programs of each CCSDS Agency and is applicable to those missions for which cross support based on capabilities described in this Recommended Standard is anticipated. Where mandatory capabilities are clearly indicated in sections of the Recommended Standard, they must be implemented when this document is used as a basis for cross support. Where options are allowed or implied, implementation of these options is subject to specific bilateral cross support agreements between the Agencies involved.

Documents
Document Sharing Hub
© ISO 2016 – All rights reserved
Full document details: BS ISO 22664:2016

1.4 RATIONALE

The CCSDS believes it is important to document the rationale underlying the recommendations chosen, so that future evaluations of proposed changes or improvements will not lose sight of previous decisions.

1.5 DOCUMENT STRUCTURE

This document is divided into six numbered sections and three annexes:

a) section 1 presents the purpose, scope, applicability and rationale of this Recommended Standard and lists the conventions, definitions, and normative references used throughout the Recommended Standard;

b) section 2 provides an overview of the TC Space Data Link Protocol;

c) section 3 defines the services provided by the protocol entity;

d) section 4 specifies the protocol data units and procedures employed by the protocol entity;

e) section 5 specifies the managed parameters used by the protocol entity;

f) section 6 specifies the protocol entity with support for the Space Data Link Security protocol;

g) annex A lists all acronyms used within this document;

h) annex B provides a list of informative references.

1.6 CONVENTIONS AND DEFINITIONS

1.6.1 DEFINITIONS

1.6.1.1 Definitions from the Open Systems Interconnection (OSI) Basic Reference Model

This Recommended Standard makes use of a number of terms defined in reference [1]. The use of those terms in this Recommended Standard is to be understood in a generic sense, i.e., in the sense that those terms are generally applicable to any of a variety of technologies that provide for the exchange of information between real systems. Those terms are:

a) blocking;

b) connection;

c) Data Link Layer;

d) entity;

Documents
Document Sharing Hub
© ISO 2016 – All rights reserved
Full document details: BS ISO 22664:2016

e) flow control;

f) Network Layer;

g) peer entities;

h) Physical Layer;

i) protocol control information;

j) protocol data unit;

k) real system;

l) segmenting;

m) service;

n) Service Access Point (SAP);

o) SAP address;

p) service data unit.

1.6.1.2 Definitions from OSI Service Definition Conventions

This Recommended Standard makes use of a number of terms defined in reference [2]. The use of those terms in this Recommended Standard is to be understood in a generic sense, i.e., in the sense that those terms are generally applicable to any of a variety of technologies that provide for the exchange of information between real systems. Those terms are:

a) confirmation;

b) indication;

c) primitive;

d) request;

e) response;

f) service provider;

g) service user.

1.6.1.3 Terms Defined in this Recommended Standard

For the purposes of this Recommended Standard, the following definitions also apply. Many other terms that pertain to specific items are defined in the appropriate sections.

asynchronous: not *synchronous* (see below).

Documents
Document Sharing Hub
© ISO 2016 – All rights reserved
Full document details: BS ISO 22664:2016

delimited: having a known (and finite) length; applies to data in the context of data handling.

Mission Phase: a period of a mission during which specified communications characteristics are fixed. The transition between two consecutive Mission Phases may cause an interruption of the communications services.

Physical Channel: a stream of bits transferred over a space link in a single direction.

space link: a communications link between a spacecraft and its associated ground system, or between two spacecraft. A space link consists of one or more Physical Channels in one or both directions.

synchronous: of or pertaining to a sequence of events occurring in a fixed time relationship (within specified tolerance) to another sequence of events.

(TC) Transfer Frame: The protocol data unit of the Telecommand (TC) Space Data Link Protocol.

1.6.2 NOMENCLATURE

1.6.2.1 Normative Text

The following conventions apply for the normative specifications in this Recommended Standard:

a) the words ‘shall’ and ‘must’ imply a binding and verifiable specification;

b) the word ‘should’ implies an optional, but desirable, specification;

c) the word ‘may’ implies an optional specification;

d) the words ‘is’, ‘are’, and ‘will’ imply statements of fact.

NOTE – These conventions do not imply constraints on diction in text that is clearly informative in nature.

1.6.2.2 Informative Text

In the normative sections of this document, informative text is set off from the normative specifications either in notes or under one of the following subsection headings:

– Overview;

– Background;

– Rationale;

– Discussion.

Documents
Document Sharing Hub
© ISO 2016 – All rights reserved
Full document details: BS ISO 22664:2016

1.6.3 CONVENTIONS

In this document, the following convention is used to identify each bit in an *N*-bit field. The first bit in the field to be transmitted (i.e., the most left justified when drawing a figure) is defined to be 'Bit 0'; the following bit is defined to be 'Bit 1' and so on up to 'Bit *N*-1'. When the field is used to express a binary value (such as a counter), the Most Significant Bit (MSB) shall be the first transmitted bit of the field, i.e., 'Bit 0' (see figure 1-1).

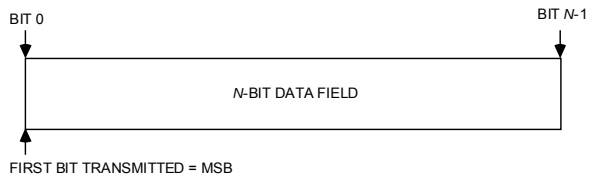

Figure 1-1: Bit Numbering Convention

In accordance with standard data-communications practice, data fields are often grouped into eight-bit 'words' which conform to the above convention. Throughout this Recommended Standard, such an eight-bit word is called an 'octet'.

The numbering for octets within a data structure starts with zero.

By CCSDS convention, all 'spare' bits shall be permanently set to '0'.

1.7 REFERENCES

The following publications contain provisions which, through reference in this text, constitute provisions of this document. At the time of publication, the editions indicated were valid. All publications are subject to revision, and users of this document are encouraged to investigate the possibility of applying the most recent editions of the publications indicated below. The CCSDS Secretariat maintains a register of currently valid CCSDS publications.

[1] *Information Technology—Open Systems Interconnection—Basic Reference Model: The Basic Model*. 2nd ed. International Standard, ISO/IEC 7498-1:1994. Geneva: ISO, 1994.

[2] *Information Technology—Open Systems Interconnection—Basic Reference Model—Conventions for the Definition of OSI Services*. International Standard, ISO/IEC 10731:1994. Geneva: ISO, 1994.

[3] *TC Synchronization and Channel Coding*. Issue 2. Recommendation for Space Data System Standards (Blue Book), CCSDS 231.0-B-2. Washington, D.C.: CCSDS, September 2010.

Documents
Document Sharing Hub
© ISO 2016 – All rights reserved
Full document details: BS ISO 22664:2016

[4] *Communications Operation Procedure-1*. Issue 2. Recommendation for Space Data System Standards (Blue Book), CCSDS 232.1-B-2. Washington, D.C.: CCSDS, September 2010.

[5] "Registries." Space Assigned Number Authority. http://sanaregistry.org/r/.

[6] *CCSDS Global Spacecraft Identification Field Code Assignment Control Procedures*. Issue 6. Recommendation for Space Data System Standards (Blue Book), CCSDS 320.0-B-6. Washington, D.C.: CCSDS, October 2013.

[7] *Space Data Link Security Protocol*. Issue 1. Recommendation for Space Data System Standards (Blue Book), CCSDS 355.0-B-1. Washington, D.C.: CCSDS, September 2015.

NOTE – Informative references are listed in annex B.

Documents
Document Sharing Hub
© ISO 2016 – All rights reserved
Full document details: BS ISO 22664:2016

2 OVERVIEW

2.1 CONCEPT OF TC SPACE DATA LINK PROTOCOL

2.1.1 ARCHITECTURE

The TC Space Data Link Protocol is a Data Link Layer protocol (see reference [1]) to be used by space missions. This protocol has been designed to meet the requirements of space missions for efficient transfer of space application data of various types and characteristics over ground-to-space or space-to-space communications links (hereafter called space links).

Figure 2-1 illustrates the relationship of this protocol to the Open Systems Interconnection (OSI) reference model (reference [1]). Two sublayers of the Data Link Layer are defined for CCSDS space link protocols as shown in reference [B2]. The TC Space Data Link Protocol corresponds to the Logical Link Sublayer and provides functions of transferring various data using a variable-length protocol data unit called the Transfer Frame. The optional Space Data Link Layer Security Protocol (reference [7]) is provided within the Data Link Protocol Sublayer, as illustrated below. The Channel Coding Sublayer provides some additional functions necessary for transferring Transfer Frames over a space link. These functions are error-correction coding/decoding, the delimiting/synchronizing of codeblocks (consisting of one or more Transfer Frames), and bit transition generation/removal (optional). For the Channel Coding Sublayer, the Channel Coding and Synchronization Recommended Standard (reference [3]) must be used with the TC Space Data Link Protocol. How the TC Space Data Link Protocol is used in overall space data systems is shown in references [B2], [B3], and [B4].

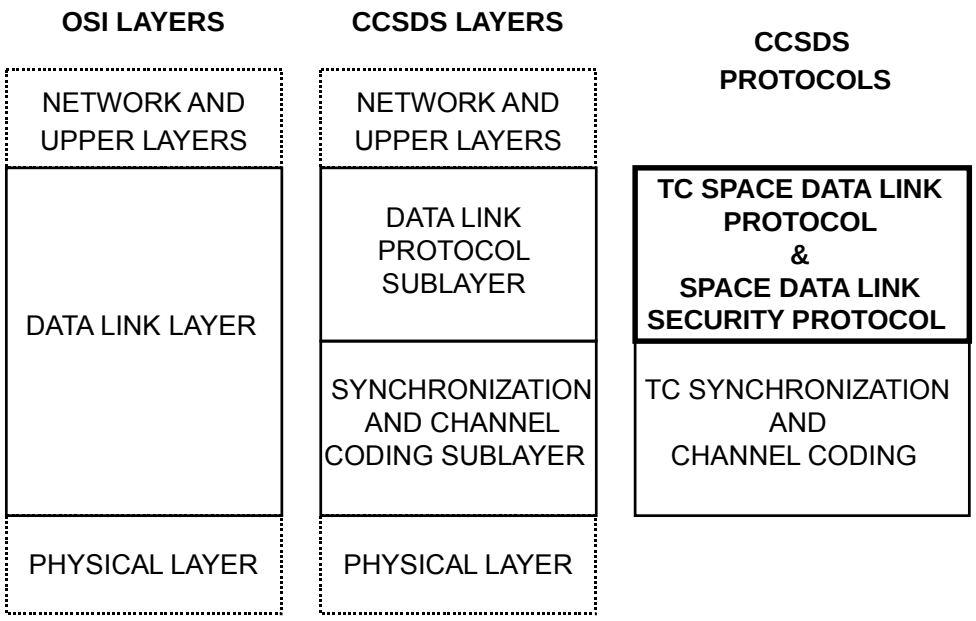

Figure 2-1: Relationship with OSI Layers

© ISO 2016 – All rights reserved
Documents Document Sharing Hub
Full document details: BS ISO 22664:2016

2.1.2 PROTOCOL FEATURES

2.1.2.1 Efficient Data Transfer

The TC Space Data Link Protocol provides the users with several services to transfer service data units over a space link. The major functions performed by this protocol are (1) segmentation and blocking of service data units and (2) transmission control of service data units.

Because the underlying space link inherently includes a noisy signal path, there is a finite probability that it will introduce an error. It is desirable to break large service data units into relatively small pieces so that each piece has a lower probability of being invalidated by transmission error than if the entire service data unit were sent contiguously. System throughput efficiency is improved because only small pieces have to be retransmitted when errors are detected. However, there may also be situations in which the service data units are very small. For efficient transfer of service data units, it is desirable to group these small units into larger pieces. The TC Space Data Link Protocol provides the capability to break large service data units into relatively small pieces (segmentation) and to group small service data units into larger pieces (blocking).

The TC Space Data Link Protocol controls the transmission of service data units through the space link performing retransmissions needed to ensure delivery of service data units in sequence and without gaps or duplication. This function is provided by an automatic retransmission control mechanism called the Communications Operation Procedure (COP). The specification of the COP is given in reference [4]. In addition, a systematic retransmission mechanism for use on deep space links can optionally be provided by the Synchronization and Channel Coding Sublayer as specified in reference [3].

2.1.2.2 Sharing the Physical Channel

The protocol data units employed by this protocol are the TC Transfer Frame (unless otherwise stated, the terms ‘Transfer Frame’ and ‘Frame’ in this document refer to the TC Transfer Frame) and the Communications Link Control Word (CLCW). Each Transfer Frame contains a header, which provides protocol control information, and a variable-length data field, within which higher-layer service data units are carried. Transfer Frames are sent in the direction of the flow of service data units. Each CLCW contains a report that describes the status of acceptance of Transfer Frames. CLCWs are sent from the receiver to the sender of Transfer Frames.

A key feature of the TC Space Data Link Protocol is the concept of ‘Virtual Channels’. The Virtual Channel facility allows one Physical Channel to be shared among multiple higher-layer data streams, each of which may have different service requirements. A single Physical Channel may therefore be divided into several separate logical data channels, each known as a ‘Virtual Channel’ (VC). Each Transfer Frame transferred over a Physical Channel belongs to one of the Virtual Channels of the Physical Channel.

Documents
Document Sharing Hub
© ISO 2016 – All rights reserved
Full document details: BS ISO 22664:2016

Optionally, this protocol enables service data units from different sources to be multiplexed together in one Virtual Channel using 'Multiplexer Access Points' (MAPs). If MAPs are used, service data units arriving at the service access point for a MAP at the sending end are transferred to the corresponding MAP at the receiving end.

2.1.2.3 Optional Space Data Link Security Protocol

The Data Link Protocol Sublayer includes the Space Data Link Security (SDLS) protocol specified in reference [7]. The SDLS protocol can provide security, such as authentication and confidentiality, for TC Transfer Frames. Support for the SDLS protocol is an optional feature of the TC Space Data Link Protocol.

NOTE – The introduction of the SDLS protocol in this Recommended Standard makes no changes to any requirements that apply to a TC Space Data Link Protocol that does not support the SDLS protocol.

The security provided by the SDLS protocol can vary between Virtual Channels and between MAPs within a Virtual Channel. So, for example, there can be some Virtual Channels with security and some without. The type of security can vary from one Virtual Channel to another and from one MAP to another.

2.1.3 ADDRESSING

There are three identifier fields in the header of Transfer Frames: Transfer Frame Version Number (TFVN), Spacecraft Identifier (SCID), and Virtual Channel Identifier (VCID). The concatenation of a TFVN and a SCID is known as a Master Channel Identifier (MCID), and the concatenation of an MCID and a VCID is called a Global Virtual Channel Identifier (GVCID). Therefore

MCID = TFVN + SCID;

GVCID = MCID + VCID
= TFVN + SCID + VCID.

Each Virtual Channel on a Physical Channel is identified by a GVCID. Therefore a Virtual Channel consists of Transfer Frames having the same GVCID.

All Transfer Frames with the same MCID on a Physical Channel constitute a Master Channel (MC). A Master Channel consists of one or more Virtual Channels. In most cases, a Physical Channel carries only Transfer Frames of a single MCID, and the Master Channel will be identical with the Physical Channel. However, a Physical Channel may carry Transfer Frames with multiple MCIDs (with the same TFVN). In such a case, the Physical Channel consists of multiple Master Channels. A Physical Channel is identified with a Physical Channel Name, which is set by management and not included in the header of Transfer Frames.

Documents
Document Sharing Hub
© ISO 2016 – All rights reserved
Full document details: BS ISO 22664:2016

In the optional Segment Header, there is a field called Multiplexer Access Point Identifier (MAP ID). All Transfer Frames with the same GVCID and MAP ID constitute a MAP Channel. If the Segment Header is used, a Virtual Channel consists of one or multiple MAP Channels. The concatenation of a GVCID and a MAP ID is known as a Global MAP ID (GMAP ID). Therefore

GMAP ID = GVCID + MAP ID
= MCID + VCID + MAP ID
= TFVN + SCID + VCID + MAP ID.

The relationships between these Channels are shown in figure 2-2.

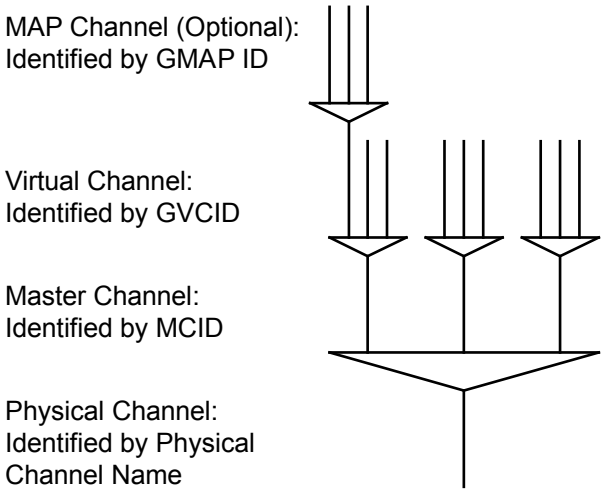

Figure 2-2: Relationships Between Channels

2.1.4 PROTOCOL DESCRIPTION

The TC Space Data Link Protocol is described in terms of:

a) the services provided to the users;

b) the protocol data units; and

c) the procedures performed by the protocol.

The service definitions are given in the form of primitives, which present an abstract model of the logical exchange of data and control information between the protocol entity and the service user. The definitions of primitives are independent of specific implementation approaches.

The procedure specifications define the procedures performed by protocol entities for the transfer of information between peer entities. The definitions of procedures are independent of specific implementation methods or technologies.

Documents
Document Sharing Hub
© ISO 2016 – All rights reserved
Full document details: BS ISO 22664:2016

This protocol specification also specifies the requirements for the underlying services provided by the Channel Coding Sublayer and the Physical Layer.

2.2 OVERVIEW OF SERVICES

2.2.1 COMMON FEATURES OF SERVICES

The TC Space Data Link Protocol provides users with data transfer services. The point at which a service is provided by a protocol entity to a user is called a Service Access Point (SAP) (see reference [1]). Each service user is identified by a SAP address. At a SAP, two ports may be provided, each of which is for one of the service types described in 2.2.2.

Service data units of the same type submitted to a SAP (or a port if implemented) are processed in the order of submission. No processing order is maintained for service data units submitted to different SAPs (or ports).

NOTE – Implementations may be required to perform flow control at a SAP (or a port if present) between the service user and the service provider. However, CCSDS does not make any recommendations for a scheme for flow control between the user and the provider.

The followings features are common to all the services defined by this Recommended Standard:

a) Unidirectional (one way) services: one end of a connection can send, but not receive, data through the space link, while the other end can receive, but not send.

b) Asynchronous services: there are no predefined timing rules for the transfer of service data units supplied by the service user or for the transmission of Transfer Frames generated by the service provider. The user may request data transfer at any time, but there may be restrictions imposed by the service provider on the data generation rate. The timing of data transfer is determined by the provider in accordance with mission-specific rules and may depend on the traffic at the time of transfer.

c) Sequence preserving services: the sequence of service data units supplied by the sending user is preserved through the transfer over the space link, although for the Expedited Service, described below, there may be gaps in the sequence of service data units delivered to the receiving user.

NOTE – This Recommended Standard assumes that these services are provided at the end points of a space link. However, this Recommended Standard makes no assumptions concerning how these end points are composed or configured either on-board a spacecraft or in a ground system. In a ground system, the services defined by this Recommended Standard may be extended or enhanced with Space Link Extension Services (reference [B5]).

Documents
Document Sharing Hub
© ISO 2016 – All rights reserved
Full document details: BS ISO 22664:2016

2.2.2 SERVICE TYPES

2.2.2.1 Overview

The TC Space Data Link Protocol provides two service types (Sequence-Controlled and Expedited) that determine how reliably service data units supplied by the sending user are delivered to the receiving user.

Both of these two service types are provided at any Service Access Point except for the Virtual Channel Frame, Master Channel Frame, and COP Management Services. The user requests with a parameter of the service request primitive whether the Sequence-Controlled or Expedited Service Type should be applied to each service data unit. Alternatively, the service provider may provide two separate ports (one for the Sequence-Controlled Service Type and the other for the Expedited Service Type) within a Service Access Point.

For the Virtual Channel Frame and Master Channel Frame Services, the service provider does not make any distinction between Sequence-Controlled and Expedited service types applicable to service data units supplied by the user. The user should perform necessary procedures to provide Sequence-Controlled and Expedited Service Types for its service data units.

2.2.2.2 Sequence-Controlled Service (Type-A Service)

The Sequence-Controlled Service (Type-A Service) utilizes an Automatic Repeat Request (ARQ) procedure of the 'go-back-*n*' type with sequence-control mechanisms at both sending and receiving ends and a standard report returned from the receiving end to the sending end.

For Type-A Service, service data units supplied by a sending user at a SAP are inserted into Transfer Frames (after MAP multiplexing when applicable) and transmitted on a Virtual Channel in the order in which they are presented at the SAP. The retransmission mechanism ensures with a high probability of success that:

a) no service data unit is lost;

b) no service data unit is duplicated;

c) no service data unit is delivered out of sequence.

The Type-A Service guarantees, with a high probability, complete in-sequence delivery of service data units supplied by a user on a single MAP or Virtual Channel. Because retransmission is performed independently on each Virtual Channel, there is no guarantee that Type-A service data units transmitted on separate Virtual Channels will be delivered to the receiving users in the order initially presented. Further, because MAP multiplexing is performed before the sequence-control mechanisms are applied, there is no guarantee that Type-A service data units transmitted on separate MAP Channels will be delivered to the receiving users in the order initially presented.

Documents
Document Sharing Hub
© ISO 2016 – All rights reserved
Full document details: BS ISO 22664:2016

NOTE – Some implementations of this protocol may not distinguish service data units transferred with Type-A Service from service data units transferred with Type-B Service at the receiving end. In this case, if both Type-A Service and Type-B Service are used simultaneously on one MAP Channel, the receiving end may not be able to reconstruct service data units transferred with Type-A Service even though the ARQ procedure has been applied to them (because, for example, the Type-A Transfer Frames derived from a single service data unit may be interlaced, at the receiving end, with Type-B Transfer Frames derived from a different service data unit). For this implementation, the sending end should terminate any ongoing Type-A Service before starting a Type-B Service on the same Virtual Channel.

2.2.2.3 Expedited Service (Type-B Service)

The Expedited Service (Type-B Service) is normally used either in exceptional operational circumstances, typically during spacecraft recovery operations, or when a higher layer protocol provides a retransmission capability.

For Type-B Service, service data units supplied by the sending user are transmitted only once (i.e., no retransmission). There is no guarantee that all Type-B service data units are delivered to the receiving user.

NOTES

1 Although Type-B Service carries the name ‘Expedited’, it is neither a required method nor a faster method for sending urgent data to the receiving end. If the service provider is supporting a reliable Type-A Service, then Type-A Service should be used exclusively.

2 For frames carrying service data units on the Type-B Service, the TC Space Data Link Protocol does not use the systematic retransmission mechanism that is optionally provided by the Synchronization and Channel Coding Sublayer (see 2.4.2).

Documents
Document Sharing Hub
© ISO 2016 – All rights reserved
Full document details: BS ISO 22664:2016

2.2.3 SUMMARY OF SERVICES

2.2.3.1 Overview

Seven services are provided by the TC Space Data Link Protocol. Two of them (MAP Packet and MAP Access) are provided for a MAP Channel. Four of them (VC Packet, Virtual Channel Access, Virtual Channel Frame, and COP Management) are provided for a Virtual Channel. One of them (Master Channel Frame) is provided for a Master Channel.

Table 2-1 summarizes these services and shows their characteristics, the Service Data Units (SDUs) that they transfer, and the availability of SDLS security features. The optional SDLS protocol can provide security features for the SDUs transferred by some of the services:

- encryption, to provide confidentiality by hiding data content;
- authentication, to confirm the source and integrity of the data.

Table 2-1: Summary of Services Provided by TC Space Data Link Protocol

Service	Service Type	Service Data Unit	SAP Address	SDLS Security Features
MAP Packet (MAPP)	Type-A and Type-B	Packet	GMAP ID + Packet Version Number	All
Virtual Channel Packet (VCP)	Type-A and Type-B	Packet	GVCID + Packet Version Number	All
MAP Access (MAPA)	Type-A and Type-B	MAP_SDU	GMAP ID	All
Virtual Channel Access (VCA)	Type-A and Type-B	VCA_SDU	GVCID	All
Virtual Channel Frame (VCF)	N/A	Transfer Frame	GVCID	None
Master Channel Frame (MCF)	N/A	Transfer Frame	MCID	None
COP Management	N/A	N/A	GVCID	N/A

2.2.3.2 MAP Packet (MAPP) Service

The MAP Packet (MAPP) Service transfers a sequence of variable-length, delimited, octet-aligned service data units known as Packets across a space link on a specified MAP Channel. The Packets transferred by this service must have a Packet Version Number (PVN) authorized by CCSDS. PVNs presently authorized by CCSDS are defined in reference [5].

Documents
Document Sharing Hub
© ISO 2016 – All rights reserved
Full document details: BS ISO 22664:2016

The service is unidirectional and asynchronous. Both Sequence-Controlled (Type-A) and Expedited (Type-B) service types are provided for the MAPP Service. The user requests with a parameter of the service request primitive whether Type-A or Type-B should be applied for each Packet or uses one port for Type-A Packets and another port for Type-B Packets.

In the context of a given GMAP ID (i.e., a GVCID and a MAP ID), a user of this service is a protocol entity that sends or receives Packets with a single PVN. A user is identified with a PVN and a GMAP ID. Different users (i.e., Packets with different versions) can share a single MAP Channel, and if there are multiple users on a MAP Channel, the service provider multiplexes Packets of different versions to form a single stream of Packets to be transferred on that MAP Channel.

2.2.3.3 Virtual Channel Packet (VCP) Service

The Virtual Channel Packet (VCP) Service transfers a sequence of variable-length, delimited, octet-aligned service data units known as Packets across a space link on a specified Virtual Channel. The Packets transferred by this service must have a PVN authorized by CCSDS. PVNs presently authorized by CCSDS are defined in reference [5].

The service is unidirectional and asynchronous. Both Sequence-Controlled (Type-A) and Expedited (Type-B) service types are provided for the VCP Service. The user requests with a parameter of the service request primitive whether Type-A or Type-B should be applied for each Packet, or uses one port for Type-A Packets and another port for Type-B Packets.

Within the context of a given GVCID, a user of this service is a protocol entity that sends or receives Packets with a single PVN. A user is identified with a PVN and a GVCID. Different users (i.e., Packets with different versions) can share a single Virtual Channel, and if there are multiple users on a Virtual Channel, the service provider multiplexes Packets of different versions to form a single stream of Packets to be transferred on that Virtual Channel.

2.2.3.4 MAP Access (MAPA) Service

The MAP Access (MAPA) Service provides transfer of a sequence of privately formatted service data units of variable length across a space link. The length of the service data units transferred by this service is not constrained by the length of the Data Field of the Transfer Frame.

The service is unidirectional and asynchronous. Both Sequence-Controlled (Type-A) and Expedited (Type-B) service types are provided for the MAPA Service. The user requests with a parameter of the service request primitive whether Type-A or Type-B should be applied for each service data unit, or uses one port for Type-A service data units and another port for Type-B service data units.

Documents
Document Sharing Hub
© ISO 2016 – All rights reserved
Full document details: BS ISO 22664:2016

For a given service instance, only one user, identified with the GMAP ID (i.e., GVCID and MAP ID) of the MAP Channel, can use this service on a MAP Channel. Service data units from different users are not multiplexed together within one MAP Channel.

2.2.3.5 Virtual Channel Access (VCA) Service

The Virtual Channel Access (VCA) Service provides transfer of a sequence of privately formatted service data units of variable length across a space link. The length of the service data units transferred by this service can not exceed the maximum length of the Data Field of the Transfer Frame.

The service is unidirectional and asynchronous. Both Sequence-Controlled (Type-A) and Expedited (Type-B) service types are provided for the VCA Service. The user requests with a parameter of the service request primitive whether Type-A or Type-B should be applied for each service data unit, or uses one port for Type-A service data units and another port for Type-B service data units.

For a given service instance, only one user, identified with the GVCID of the Virtual Channel, can use this service on a Virtual Channel. Service data units from different users are not multiplexed together within one Virtual Channel.

2.2.3.6 Virtual Channel Frame (VCF) Service

The Virtual Channel Frame (VCF) Service provides transfer of a sequence of TC Transfer Frames, created by an independent protocol entity, on a Virtual Channel across a space link. The service does not guarantee completeness nor does it make any distinction between Sequence-Controlled and Expedited service types applicable to service data units supplied by the user. The user should perform necessary procedures to provide Sequence-Controlled and Expedited service types.

For a given service instance, only one user, identified with the GVCID of the Virtual Channel, can use this service on a Virtual Channel. Service data units from different users are not multiplexed together within one Virtual Channel.

The Virtual Channel Frame Service transfers the independently created TC Transfer Frames through a space link, together with TC Transfer Frames created by the service provider itself. This service is made available to trusted users who are certified during the design process to ensure that the independently created protocol data units do not violate the operational integrity of the space link.

2.2.3.7 Master Channel Frame (MCF) Service

The Master Channel Frame (MCF) Service provides transfer of a sequence of TC Transfer Frames of a Master Channel, created by an independent protocol entity, across a space link.

Documents
Document Sharing Hub
© ISO 2016 – All rights reserved
Full document details: BS ISO 22664:2016

The service does not guarantee completeness nor does it make any distinction between Sequence-Controlled and Expedited service types applicable to service data units supplied by the user. The user should perform necessary procedures to provide Sequence-Controlled and Expedited service types.

For a given service instance, only one user, identified with the MCID of the Master Channel, can use this service on a Master Channel. Service data units from different users are not multiplexed together within one Master Channel.

The Master Channel Frame Service transfers the independently created TC Transfer Frames through the space link, together with TC Transfer Frames created by the service provider itself. This service is made available to trusted users who are certified during the design process to ensure that the independently created protocol data units do not violate the operational integrity of the space link.

2.2.3.8 COP Management Service

The COP Management Service is used by a user at the sending end for managing the operations of the COP for a particular Virtual Channel. The user manages the operations of the COP by invoking Directives defined in reference [4]. The user is notified by the service provider of events associated with Directives and events that occur asynchronously with Directives.

A user of this service must be authorized to manage the COP for a particular Virtual Channel. For a given service instance, only one user, identified with the GVCID of the Virtual Channel, is allowed to use this service on a Virtual Channel.

2.2.4 RESTRICTIONS ON SERVICES

There are some restrictions on the services provided on a Physical Channel.

a) If the Master Channel Frame Service exists on a Master Channel, other services shall not exist simultaneously on that Master Channel.

b) If the Virtual Channel Frame Service exists on a Virtual Channel, other services shall not exist simultaneously on that Virtual Channel.

c) If the Virtual Channel Access Service exists on a Virtual Channel, other services shall not exist simultaneously on that Virtual Channel.

d) If the Virtual Channel Packet Service exists on a Virtual Channel, other services shall not exist simultaneously on that Virtual Channel.

e) On one MAP Channel, the MAP Access Service shall not exist simultaneously with the MAP Packet Service.

Documents
Document Sharing Hub
© ISO 2016 – All rights reserved
Full document details: BS ISO 22664:2016

2.3 OVERVIEW OF FUNCTIONS

2.3.1 GENERAL FUNCTIONS

Using services of lower layers, the TC Space Data Link Protocol transfers various service data units, supplied by sending users, encapsulated in a sequence of protocol data units. The protocol data units, known as TC Transfer Frames, have variable lengths and are transferred over a Physical Channel asynchronously.

The protocol entity performs the following protocol functions:

a) generation and processing of protocol control information (i.e., headers and trailers) to perform data identification, loss detection, and error detection;

b) segmenting and blocking of service data units to transfer service data units of various sizes in protocol data units suitable for efficient transfer;

c) multiplexing/demultiplexing in order for various service users to share a single Physical Channel;

d) retransmission of missing protocol data units, rejection of out-of-sequence and duplicated protocol data units, and control of sequence-control mechanisms at sending and receiving ends to guarantee complete and in-order delivery (for Type-A Service only);

e) flow control (for Type-A Service only).

If the protocol entity supports the optional SDLS protocol, then it uses the functions of SDLS to apply the configured security features.

The protocol entity does not perform the following protocol functions:

a) connection establishment and release;

b) management or configuration of the SDLS protocol.

2.3.2 INTERNAL ORGANIZATION OF PROTOCOL ENTITY

Figures 2-3 and 2-4 show the internal organization of the protocol entity of the sending and receiving ends, respectively. Data flow from top to bottom in figure 2-3 and from bottom to top in figure 2-4. The four functions in the upper part of these figures are collectively called the Segmentation Sublayer, and the other four functions in the lower part are collectively called the Transfer Sublayer.

These figures identify data-handling functions performed by the protocol entity. The purpose of these figures is to show logical relationships among the functions of the protocol entity. The figures are not intended to imply any hardware or software configuration in a real

Documents
Document Sharing Hub
© ISO 2016 – All rights reserved
Full document details: BS ISO 22664:2016

system. Depending on the services actually used for a real system, not all of the functions may be present in the protocol entity.

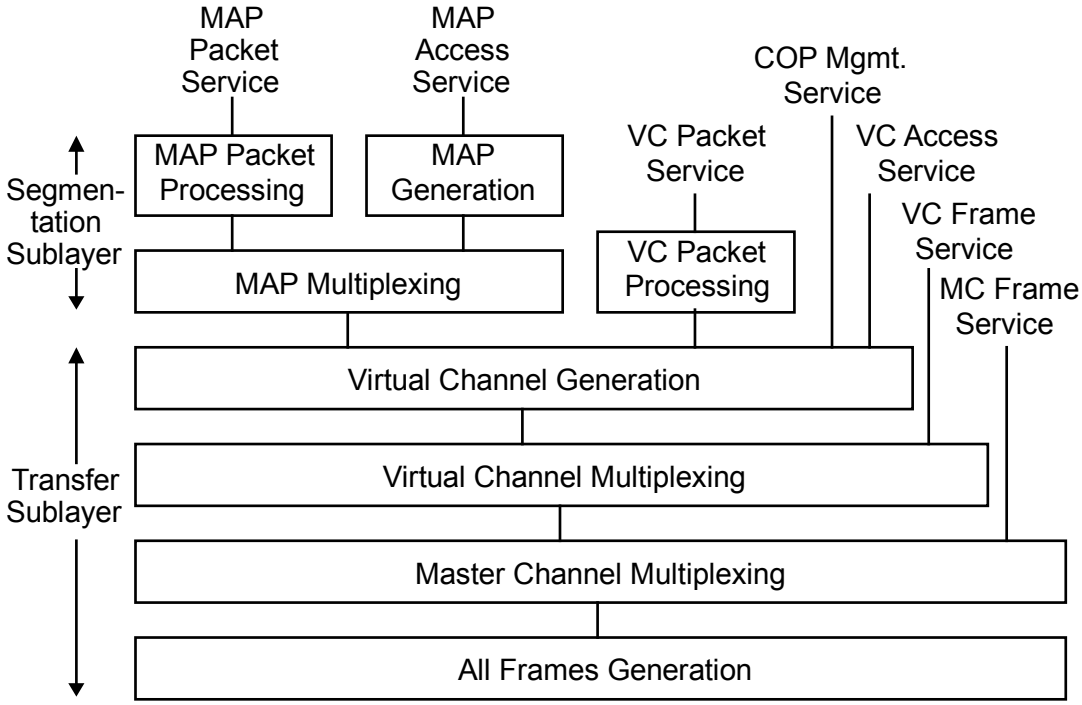

Figure 2-3: Internal Organization of Protocol Entity (Sending End)

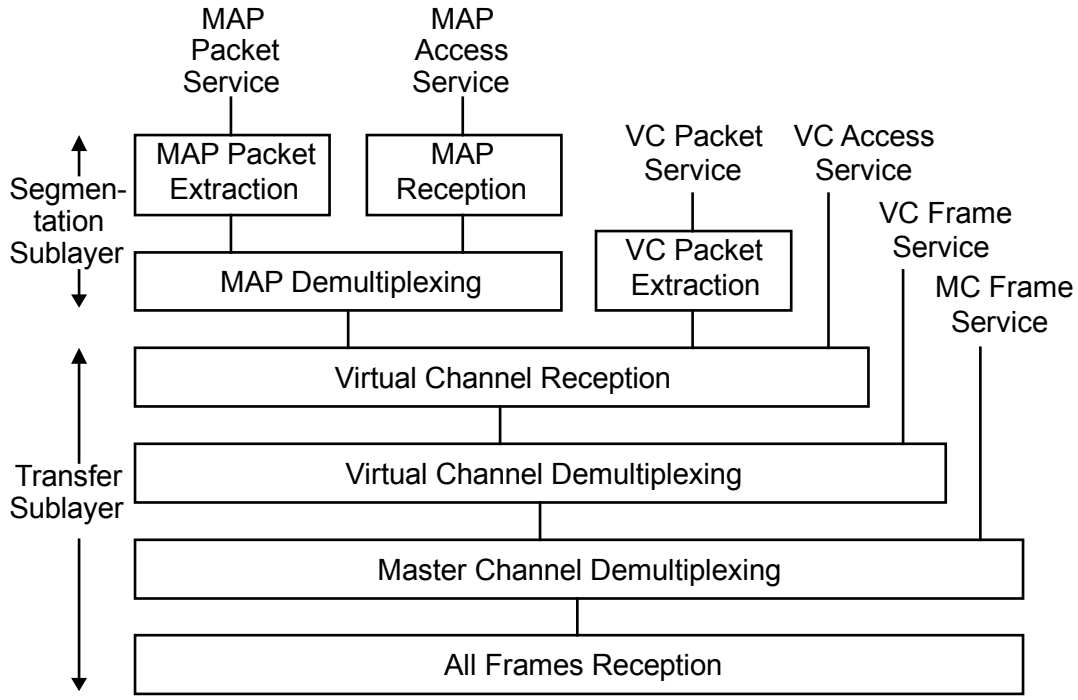

Figure 2-4: Internal Organization of Protocol Entity (Receiving End)

Documents Document Sharing Hub
© ISO 2016 – All rights reserved
Full document details: BS ISO 22664:2016

By extracting multiplexing and demultiplexing functions from figures 2-3 and 2-4, the relationship among various data units can be shown as figure 2-5, which is known as the Channel Tree of the TC Space Data Link Protocol.

In figure 2-5, multiplexing (shown with a triangle) is a function of mixing, according to an algorithm established by the project, multiple streams of data units, each with a different identifier, and generating a single stream of data units.

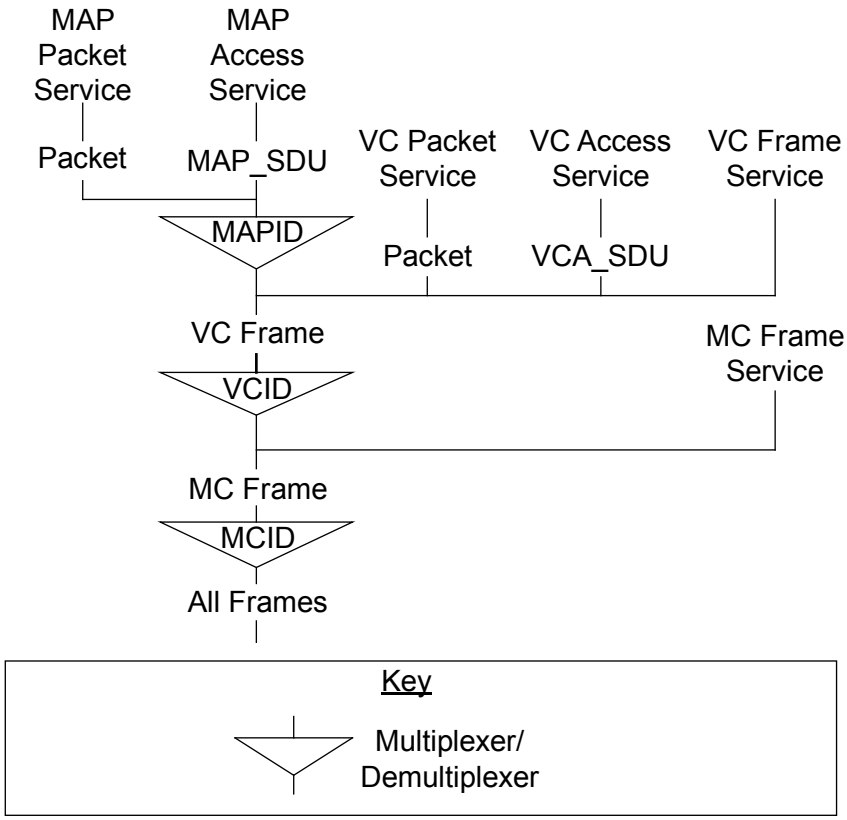

Figure 2-5: TC Space Data Link Protocol Channel Tree

2.3.3 COMMUNICATIONS OPERATION PROCEDURE (COP)

The Communications Operation Procedure (COP) fully specifies the closed-loop procedures executed by the sending and receiving ends of the TC Space Data Link Protocol. The COP, which exists wholly within this protocol, consists of a pair of synchronized procedures for each Virtual Channel: a Frame Operation Procedure (FOP) that executes within the sending entity; and a Frame Acceptance and Reporting Mechanism (FARM) that executes within the receiving entity. The sending FOP transmits Transfer Frames to the receiving FARM. The FARM returns to the FOP reports of the status of Transfer Frame acceptance using Communications Link Control Words (CLCWs) and thus closes the loop.

Within this protocol, the COP provides a basic Quality of Service (QoS), i.e., the delivery of service data units to the layer above at the receiving end, correct and without omission or

Documents
Document Sharing Hub
© ISO 2016 – All rights reserved
Full document details: BS ISO 22664:2016

duplication, and in the same sequential order in which they were received from the layer above at the sending end.

Underlying this protocol is a space link, which interconnects its sending and receiving ends. If a perfect link existed, the QoS would be assured since the exact duplicate of the series of service data units input at the sending end would appear at the receiving end. However, space links are noisy and may introduce errors or discontinuities into transmitted data streams. The job of the COP within this protocol is therefore to ensure, in the presence of such errors or discontinuities introduced by the space link, the correctness, completeness, and sequentiality of the delivered service data units.

Correctness of the delivered service data units is guaranteed (within known error probabilities) by the error-protection encoding applied by the Channel Coding Sublayer, and by the Frame Validation Checks performed in this protocol. However, validation of the completeness, sequentiality, and non-duplication of the delivered service data units on a particular Virtual Channel requires that an accounting (i.e., numbering) scheme for Transfer Frames be implemented by the COP.

The COP controls transfer of Type-A Transfer Frames so that service data units within Type-A Transfer Frames are delivered to the receiving end of the layer above, correct and without omission or duplication, and in the same sequential order in which they were received from the layer above at the sending end.

Type-B Transfer Frames are processed by the COP only to the extent of causing the FARM to increment a counter for Type-B Transfer Frames in the CLCW. Type-B Transfer Frames are also used to send Control Commands from the FOP to the FARM.

Only one COP, which is called COP-1, is defined in this Recommended Standard. The detailed specification of the COP-1 is given in reference [4].

CAUTION – The controlling specifications for the logical operations which must be executed to perform the COP-1 are contained in a more detailed CCSDS Recommended Standard (reference [4]). In the event of any conflict between the descriptive text contained in this Recommended Standard and the text of reference [4], the more detailed specifications contained in reference [4] are normative.

Documents
Document Sharing Hub
© ISO 2016 – All rights reserved
Full document details: BS ISO 22664:2016

2.4 SERVICES ASSUMED FROM LOWER LAYERS

2.4.1 SERVICES ASSUMED FROM THE CHANNEL CODING SUBLAYER

As described in 2.1.1, the TC Synchronization and Channel Coding Recommended Standard (reference [3]) must be used with the TC Space Data Link Protocol as the Synchronization and Channel Coding Sublayer specification. The functions provided by the TC Synchronization and Channel Coding Recommended Standard are as follows:

a) error control encoding and decoding functions;

b) bit transition generation and removal functions (optional);

c) delimiting and synchronizing functions.

The Synchronization and Channel Coding Sublayer, then, transfers variable-length, delimited protocol data units as an intermittent stream of bits over a space link using the services of the underlying Physical Layer.

2.4.2 SYSTEMATIC RETRANSMISSIONS

In addition, the TC Space Data Link Protocol can request the Synchronization and Channel Coding Sublayer to perform systematic retransmissions of the data units submitted to it. The retransmissions can improve the efficiency of the protocol for deep space missions on links with long light time delays.

The definition of the service interface to the Synchronization and Channel Coding Sublayer specified in reference [3] includes the ChannelAccess.request service primitive, which has an optional Repetitions parameter. The sublayer transfers the data unit the number of times specified by Repetitions. If the value of Repetitions is one, or if the sublayer does not support the Repetitions parameter, then no systematic retransmissions are performed, and the data unit is transferred once.

The TC Space Data Link Protocol requests the systematic retransmissions in accordance with parameters set by management. For each Virtual Channel, management sets the value to be used for the Repetitions parameter when requesting the transfer of frames carrying service data units on the Type-A Service. For each Virtual Channel, management sets a similar parameter for frames carrying COP control commands. For a Physical Channel, management sets an upper limit for the value of the Repetitions parameter specified in reference [3].

When requesting the transfer of frames carrying service data units on the Type-B Service, the TC Space Data Link Protocol always sets the value of the Repetitions parameter to one.

Documents
Document Sharing Hub
© ISO 2016 – All rights reserved
Full document details: BS ISO 22664:2016

2.4.3 PERFORMANCE REQUIREMENTS TO LOWER LAYERS

The coding options of the TC Synchronization and Channel Coding Recommended Standard and the performance of the RF link provided by the Physical Layer shall be chosen according to the following criteria:

a) the probability of misidentifying the MCID, VCID and MAP ID shall be less than a mission-specified value;

b) the probability of rejection of Transfer Frames by the Channel Coding Sublayer due to channel errors shall be less than a mission-specified value.

In order to assure correct decoding at the receiving end, the same coding options must be applied to all Transfer Frames of a Physical Channel.

Documents
Document Sharing Hub
© ISO 2016 – All rights reserved
Full document details: BS ISO 22664:2016

Documents
Document Sharing Hub

© ISO 2016 – All rights reserved
Full document details: BS ISO 22664:2016

3 SERVICE DEFINITION

3.1 OVERVIEW

This section provides service definition in the form of primitives, which present an abstract model of the logical exchange of data and control information between the protocol entity and the service user. The definitions of primitives are independent of specific implementation approaches.

The parameters of the primitives are specified in an abstract sense and specify the information to be made available to the user of the primitives. The way in which a specific implementation makes this information available is not constrained by this specification. In addition to the parameters specified in this section, an implementation may provide other parameters to the service user (e.g., parameters for controlling the service, monitoring performance, facilitating diagnosis, and so on).

3.2 SOURCE DATA

3.2.1 SOURCE DATA OVERVIEW

NOTE – This subsection describes the service data units that are transferred from sending users to receiving users by the TC Space Data Link Protocol.

The service data units transferred by the TC Space Data Link Protocol shall be:

a) Packet;

b) MAP Access Service Data Unit (MAP_SDU);

c) Virtual Channel Access Service Data Unit (VCA_SDU);

d) TC Transfer Frame.

3.2.2 PACKET

3.2.2.1 Packets shall be transferred over a space link via the MAP Packet and VC Packet Services.

3.2.2.2 The Packets transferred by this service must have a PVN authorized by CCSDS.

NOTES

1 Packets are variable-length, delimited, octet-aligned data units, and are usually the protocol data unit of a Network Layer protocol.

2 PVNs presently authorized by CCSDS are defined in reference [5].

Documents
Document Sharing Hub
© ISO 2016 – All rights reserved
Full document details: BS ISO 22664:2016

3.2.2.3 If blocking of Packets is performed by the service provider, the position and length of the Packet Length Field of the Packets must be known to the service provider in order to extract Packets from Transfer Frames at the receiving end.

3.2.3 MAP CHANNEL ACCESS SERVICE DATA UNIT (MAP_SDU)

3.2.3.1 MAP Channel Access Service Data Units (MAP_SDUs) shall be transferred over a space link via the MAP Channel Access Service.

3.2.3.2 A single MAP_SDU may be transmitted in the Data Field of one or multiple Transfer Frame(s), and therefore the length of MAP_SDUs is not constrained by the length of the Data Field of the Transfer Frames.

NOTE – MAP_SDUs are variable-length, octet-aligned data units, the format of which is unknown to the service provider.

3.2.4 VIRTUAL CHANNEL ACCESS SERVICE DATA UNIT (VCA_SDU)

3.2.4.1 Virtual Channel Access Service Data Units (VCA_SDUs) shall be transferred over a space link via the Virtual Channel Access Service.

3.2.4.2 A single VCA_SDU shall be transmitted in the Data Field of a single Transfer Frame, and therefore the length of VCA_SDUs shall not exceed the maximum length of the Transfer Frame Data Field.

NOTE – VCA_SDUs are variable-length, delimited, octet-aligned data units, the format of which is unknown to the service provider.

3.2.5 TC TRANSFER FRAME

If it is present on the Physical Channel, the Frame Error Control Field of Transfer Frames submitted to the Virtual Channel Frame and Master Channel Frame Services shall be included and shall be set to ‘all zeroes’.

NOTE – The TC Transfer Frame is the variable-length protocol data unit of the TC Space Data Link Protocol, but it can also be used as the service data unit of the Virtual Channel Frame and Master Channel Frame Services. Its format is defined in 4.1 of this Recommended Standard. Transfer Frames submitted to the Virtual Channel Frame and Master Channel Frame Services are actually partially formatted TC Transfer Frames having ‘empty’ Frame Error Control Fields.

Documents
Document Sharing Hub
© ISO 2016 – All rights reserved
Full document details: BS ISO 22664:2016

3.3 MAP PACKET SERVICE

3.3.1 OVERVIEW

The MAP Packet (MAPP) Service transfers a sequence of variable-length, delimited, octet-aligned service data units known as Packets across a space link on a specified MAP Channel. The Packets transferred by this service must be assigned a Packet Version Number (PVN) by CCSDS. Packet Version Numbers presently authorized by CCSDS are defined in reference [5].

The service is unidirectional and asynchronous. Both Sequence-Controlled (Type-A) and Expedited (Type-B) service types are provided for the MAPP Service. The user requests with a parameter of the service request primitive whether Type-A or Type-B should be applied for each Packet, or uses one port for Type-A Packets and another port for Type-B Packets.

A user of this service is a protocol entity identified with the PVN and a GMAP ID (i.e., a GVCID and a MAP ID) that sends or receives Packets with a single PVN. Different users (i.e., Packets with different versions) can share a single MAP Channel, and if there are multiple users on a MAP Channel, the service provider multiplexes Packets of different versions to form a single stream of Packets to be transferred on that MAP Channel.

3.3.2 MAPP SERVICE PARAMETERS

3.3.2.1 General

The parameters used by the MAPP Service primitives shall conform to the specifications of the following subsections.

3.3.2.2 Packet

The Packet parameter shall contain a Packet for transfer by the MAPP Service.

NOTE – The Packet parameter is the service data unit transferred by the MAPP Service. Restrictions on the Packets transferred by the MAPP Service are stated in 3.2.2.

3.3.2.3 GVCID

The GVCID parameter shall contain a GVCID that indicates the Virtual Channel through which the Packet is to be transferred.

NOTE – The GVCID consists of an MCID and a VCID and is part of the SAP address of the MAPP Service.

Documents
Document Sharing Hub
© ISO 2016 – All rights reserved
Full document details: BS ISO 22664:2016

3.3.2.4 MAP ID

The MAP ID parameter shall contain a MAP ID that indicates the MAP Channel (within the Virtual Channel specified by the GVCID) through which the Packet is to be transferred.

NOTE – The MAP ID is part of the SAP address of the MAPP Service.

3.3.2.5 Packet Version Number

The Packet Version Number parameter shall contain the PVN of the Packet to be transferred.

NOTE – The PVN is part of the SAP address of the MAPP Service and identifies the upper-layer protocol entity that uses the MAPP Service.

3.3.2.6 SDU ID

The SDU ID parameter shall contain a user-supplied sequence number to be used to identify the associated Packet in subsequent MAPP_Notify.indication primitives.

3.3.2.7 Service Type

3.3.2.7.1 The Service Type parameter shall indicate whether the Packet should be transferred with the Sequence-Controlled Service type (Type-A) or the Expedited Service type (Type-B).

3.3.2.7.2 When separate ports are provided for Type-A and Type-B Services (see 2.2.2), the Service Type parameter is not used.

3.3.2.7.3 At the receiving end, the Service Type parameter is not used.

3.3.2.8 Notification Type

In notifications to the user, the Notification Type parameter shall contain information about an event associated with the transfer of a Packet. The values taken by this parameter are defined in reference [4].

3.3.2.9 Packet Quality Indicator

The Packet Quality Indicator is an optional parameter that may be used to notify the user at the receiving end of the Packet Service whether the Packet delivered by the primitive is complete or partial. This parameter shall be used when the service provider is required to deliver incomplete Packets to the user at the receiving end.

Documents
Document Sharing Hub
© ISO 2016 – All rights reserved
Full document details: BS ISO 22664:2016