BS ISO 22671:2021

BSI Standards Publication

Space data and information transfer systems — Space link extension (SLE) — Forward communications link transmission unit (CLTU) service specification

Documents
Document Sharing Hub

Full document details: BS ISO 22671:2021

National foreword

This British Standard is the UK implementation of ISO 22671:2021. It supersedes BS ISO 22671:2011, which is withdrawn.

The UK participation in its preparation was entrusted to Technical Committee ACE/68, Space systems and operations.

A list of organizations represented on this committee can be obtained on request to its committee manager.

Contractual and legal considerations

This publication has been prepared in good faith, however no representation, warranty, assurance or undertaking (express or implied) is or will be made, and no responsibility or liability is or will be accepted by BSI in relation to the adequacy, accuracy, completeness or reasonableness of this publication. All and any such responsibility and liability is expressly disclaimed to the full extent permitted by the law.

This publication is provided as is, and is to be used at the recipient's own risk.

The recipient is advised to consider seeking professional guidance with respect to its use of this publication.

This publication is not intended to constitute a contract. Users are responsible for its correct application.

© The British Standards Institution 2021
Published by BSI Standards Limited 2021

ISBN 978 0 580 99898 0

ICS 49.140

Compliance with a British Standard cannot confer immunity from legal obligations.

This British Standard was published under the authority of the Standards Policy and Strategy Committee on 31 July 2021.

Amendments/corrigenda issued since publication

Date	Text affected

Documents
Document Sharing Hub

Full document details: BS ISO 22671:2021

INTERNATIONAL STANDARD

ISO 22671

Fourth edition
2021-06

Space data and information transfer systems — Space link extension (SLE) — Forward communications link transmission unit (CLTU) service specification

Systèmes de transfert des informations et données spatiales — Extension de liaisons spatiales (SLE) — Service de l'unité de transmission pour la liaison d'envoi de télécommande (CLTU)

Reference number
ISO 22671:2021(E)

Documents
Document Sharing Hub

© ISO 2021

Full document details: BS ISO 22671:2021

COPYRIGHT PROTECTED DOCUMENT

© ISO 2021

All rights reserved. Unless otherwise specified, or required in the context of its implementation, no part of this publication may be reproduced or utilized otherwise in any form or by any means, electronic or mechanical, including photocopying, or posting on the internet or an intranet, without prior written permission. Permission can be requested from either ISO at the address below or ISO's member body in the country of the requester.

ISO copyright office
CP 401 • Ch. de Blandonnet 8
CH-1214 Vernier, Geneva
Phone: +41 22 749 01 11
Email: copyright@iso.org
Website: www.iso.org

Published in Switzerland

© ISO 2021 – All rights reserved

Documents
Document Sharing Hub

Full document details: BS ISO 22671:2021

Foreword

ISO (the International Organization for Standardization) is a worldwide federation of national standards bodies (ISO member bodies). The work of preparing International Standards is normally carried out through ISO technical committees. Each member body interested in a subject for which a technical committee has been established has the right to be represented on that committee. International organizations, governmental and non-governmental, in liaison with ISO, also take part in the work. ISO collaborates closely with the International Electrotechnical Commission (IEC) on all matters of electrotechnical standardization.

The procedures used to develop this document and those intended for its further maintenance are described in the ISO/IEC Directives, Part 1. In particular, the different approval criteria needed for the different types of ISO documents should be noted (see www.iso.org/directives).

Attention is drawn to the possibility that some of the elements of this document may be the subject of patent rights. ISO shall not be held responsible for identifying any or all such patent rights. Details of any patent rights identified during the development of the document will be in the Introduction and/or on the ISO list of patent declarations received (see www.iso.org/patents).

Any trade name used in this document is information given for the convenience of users and does not constitute an endorsement.

For an explanation of the voluntary nature of standards, the meaning of ISO specific terms and expressions related to conformity assessment, as well as information about ISO's adherence to the World Trade Organization (WTO) principles in the Technical Barriers to Trade (TBT) see www.iso.org/iso/foreword.html.

This document was prepared by the Consultative Committee for Space Data Systems (CCSDS) (as CCSDS 912.1-B-4, August 2016) and was adopted (without modifications) by Technical Committee ISO/TC 20, *Space vehicles,* Subcommittee SC 13, *Space data and information transfer systems*.

This fourth edition cancels and replaces the third edition (ISO 22671:2011), which has been technically revised.

The main changes compared to the previous edition are as follows:

— adds clarifications and corrections.

Any feedback or questions on this document should be directed to the user's national standards body. A complete listing of these bodies can be found at www.iso.org/members.html.

© ISO 2021 – All rights reserved

Documents
Document Sharing Hub
Full document details: BS ISO 22671:2021

CCSDS RECOMMENDED STANDARD FOR SLE FCLTU SERVICE

CONTENTS

Section Page

1 INTRODUCTION 1-1

1.1 PURPOSE OF THIS RECOMMENDED STANDARD 1-1
1.2 SCOPE 1-1
1.3 APPLICABILITY 1-1
1.4 RATIONALE 1-2
1.5 DOCUMENT STRUCTURE 1-2
1.6 DEFINITIONS, NOMENCLATURE, AND CONVENTIONS 1-5
1.7 REFERENCES 1-12

2 DESCRIPTION OF THE FORWARD CLTU SERVICE 2-1

2.1 OVERVIEW 2-1
2.2 SPACE LINK EXTENSION REFERENCE MODEL 2-2
2.3 SERVICE MANAGEMENT 2-3
2.4 ARCHITECTURE MODEL – FUNCTIONAL VIEW 2-3
2.5 ARCHITECTURE MODEL – CROSS-SUPPORT VIEW 2-6
2.6 FUNCTIONAL DESCRIPTION 2-7
2.7 OPERATIONAL SCENARIO 2-14
2.8 SECURITY ASPECTS OF THE SLE FORWARD CLTU TRANSFER SERVICE 2-16

3 FORWARD CLTU SERVICE OPERATIONS 3-1

3.1 GENERAL CONSIDERATIONS 3-1
3.2 CLTU-BIND 3-8
3.3 CLTU-UNBIND 3-15
3.4 CLTU-START 3-18
3.5 CLTU-STOP 3-22
3.6 CLTU-TRANSFER-DATA 3-25
3.7 CLTU-ASYNC-NOTIFY 3-33
3.8 CLTU-SCHEDULE-STATUS-REPORT 3-39
3.9 CLTU-STATUS-REPORT 3-43
3.10 CLTU-GET-PARAMETER 3-48
3.11 CLTU-THROW-EVENT 3-53
3.12 CLTU-PEER-ABORT 3-58

4 CLTU PROTOCOL 4-1

4.1 GENERIC PROTOCOL CHARACTERISTICS 4-1
4.2 CLTU SERVICE PROVIDER BEHAVIOR 4-4

Documents
Document Sharing Hub
© ISO 2021 – All rights reserved

Full document details: BS ISO 22671:2021

CONTENTS (continued)

Section Page

ANNEX A DATA TYPE DEFINITIONS (NORMATIVE) A-1
ANNEX B PRODUCTION STATUS (NORMATIVE) B-1
ANNEX C CONFORMANCE OPTIONS MATRIX (NORMATIVE) C-1
ANNEX D INDEX TO DEFINITIONS (INFORMATIVE) D-1
ANNEX E ACRONYMS (INFORMATIVE) E-1
ANNEX F THROW EVENT DEFINITIONS (INFORMATIVE) F-1
ANNEX G INFORMATIVE REFERENCES (INFORMATIVE) G-1

Figure

1-1 SLE Services Documentation 1-4
2-1 Forward TC Space Link Processing SLE-FG 2-4
2-2 Forward CLTU Service Production and Provision 2-5
2-3 Example of Management and Provision of Forward CLTU Service 2-6
2-4 Simplified Forward CLTU Service Provider State Transition Diagram 2-9
2-5 Communications Realization of Forward CLTU Service 2-12
B-1 CLTU Production Status Transitions B-1

Table

2-1 Forward CLTU Service Operations 2-8
3-1 Setting of Forward CLTU Service Configuration Parameters 3-6
3-2 CLTU-BIND Parameters 3-9
3-3 CLTU-UNBIND Parameters 3-16
3-4 CLTU-START Parameters 3-18
3-5 CLTU-STOP Parameters 3-22
3-6 CLTU-TRANSFER-DATA Parameters 3-25
3-7 CLTU-ASYNC-NOTIFY Parameters 3-33
3-8 CLTU-SCHEDULE-STATUS-REPORT Parameters 3-39
3-9 CLTU-STATUS-REPORT Parameters 3-43
3-10 CLTU-GET-PARAMETER Parameters 3-48
3-11 Forward CLTU Parameters 3-50
3-12 CLTU-THROW-EVENT Parameters 3-54
3-13 CLTU-PEER-ABORT Parameters 3-58
4-1 Provider Behavior 4-7
4-2 Event Description References 4-10
4-3 Predicate Definitions 4-10
4-4 Boolean Flags 4-11
4-5 Compound Action Definitions 4-11

Documents
Document Sharing Hub

© ISO 2021 – All rights reserved

Full document details: BS ISO 22671:2021

CONTENTS (continued)

Table Page

B-1 Production Status Changes and Notifications....B-2
B-2 Effect of Production Status on Operations B-5
C-1 Conformance Matrix for CLTU Service (Operations) C-1
C-2 Conformance Matrix for CLTU Service (Other Requirements)....C-1
F-1 Throw Event Examples....F-1

© ISO 2021 – All rights reserved

Documents
Document Sharing Hub

Full document details: BS ISO 22671:2021

1 INTRODUCTION

1.1 PURPOSE OF THIS RECOMMENDED STANDARD

This Recommended Standard defines the Communications Link Transmission Unit (CLTU) service in conformance with the transfer services specified in reference [1], *Cross Support Reference Model—Part 1: SLE Services*. The Forward CLTU service is a Space Link Extension (SLE) transfer service that enables a mission to send Communications Link Transmission Units (CLTUs) to a spacecraft.

1.2 SCOPE

This Recommended Standard defines, in an abstract manner, the Forward CLTU service in terms of:

a) the operations necessary to provide the transfer service;

b) the parameter data associated with each operation;

c) the behaviors that result from the invocation of each operation; and

d) the relationship between, and the valid sequence of, the operations and resulting behaviors.

It does not specify:

a) individual implementations or products;

b) the implementation of entities or interfaces within real systems;

c) the methods or technologies required to radiate data to a spacecraft and to acquire telemetry frames from the signals received from that spacecraft for extraction of the Operational Control Field;

d) the methods or technologies required for communications; or

e) the management activities necessary to schedule, configure, and control the Forward CLTU service.

1.3 APPLICABILITY

1.3.1 APPLICABILITY OF THIS RECOMMENDED STANDARD

This Recommended Standard provides a basis for the development of real systems that implement the Forward CLTU service. Implementation of the Forward CLTU service in a real system additionally requires the availability of a communications service to convey invocations and returns of Forward CLTU service operations between service users and

© ISO 2021 – All rights reserved

Documents
Document Sharing Hub

Full document details: BS ISO 22671:2021

providers. This Recommended Standard requires that such a communications service ensure that invocations and returns of operations are transferred:

a) in sequence;

b) completely and with integrity;

c) without duplication;

d) with flow control that notifies backpressure to the application layer in the event of congestion; and

e) with notification to the application layer in the event that communications between the Forward CLTU service user and the Forward CLTU service provider are disrupted, possibly resulting in a loss of data.

It is the specific intent of this Recommended Standard to define the Forward CLTU service in a manner that is independent of any particular communications services, protocols, or technologies.

1.3.2 LIMITS OF APPLICABILITY

This Recommended Standard specifies the Forward CLTU service that may be provided by an SLE System for inter-Agency cross support. It is neither a specification of, nor a design for, real systems that may be implemented for the control and monitoring of existing or future missions.

1.4 RATIONALE

The goal of this Recommended Standard is to create a standard for interoperability between the tracking stations or ground data handling systems of various agencies and the users of forward services.

1.5 DOCUMENT STRUCTURE

1.5.1 DOCUMENT ORGANIZATION

This Recommended Standard is organized as follows:

a) section 0 provides purpose, scope, applicability, and rationale of this Recommended Standard and lists definitions, nomenclature, conventions, and references used throughout the Recommended Standard;

b) section 2 presents an overview of the Forward CLTU service including a functional description, the service management context, and protocol considerations;

c) section 3 specifies the operations of the Forward CLTU service;

Documents
Document Sharing Hub
© ISO 2021 – All rights reserved

Full document details: BS ISO 22671:2021

d) section 4 specifies the dynamic behavior of the Forward CLTU service in terms of the state transitions of the Forward CLTU service provider;

e) annex A is a formal specification of Forward CLTU service data types, using the Abstract Syntax Notation One (ASN.1);

f) annex B explains the relationship of the Forward CLTU service provisioning on the production status and its dependency on the status of the forward space link channel.

g) annex C provides a conformance matrix that defines what capabilities must be provided for an implementation to be considered compliant with this Recommended Standard;

h) annex D lists all terms used in this document and identifies where they are defined;

i) annex E lists all acronyms used within this document;

j) annex F contains examples of usage of the CLTU-THROW-EVENT operation;

k) annex G contains a list of informative references.

1.5.2 SLE SERVICES DOCUMENTATION TREE

This Recommended Standard is based on the architectural model for cross support defined in reference [1]. It expands upon the concept of an SLE transfer service as interactions between SLE Mission User Entities (MUEs) and an SLE transfer service provider for the purpose of providing the Forward CLTU transfer service.

This Recommended Standard is part of a suite of documents specifying the SLE Services. The SLE Services constitute one of the three types of Cross Support Services:

a) Part 1: SLE Services;

b) Part 2: Ground Communications Services;

c) Part 3: Ground Domain Services.

The basic organization of the SLE services documentation is shown in figure 1-1. The documents are described in the following paragraphs.

Documents
Document Sharing Hub

© ISO 2021 – All rights reserved

Full document details: BS ISO 22671:2021

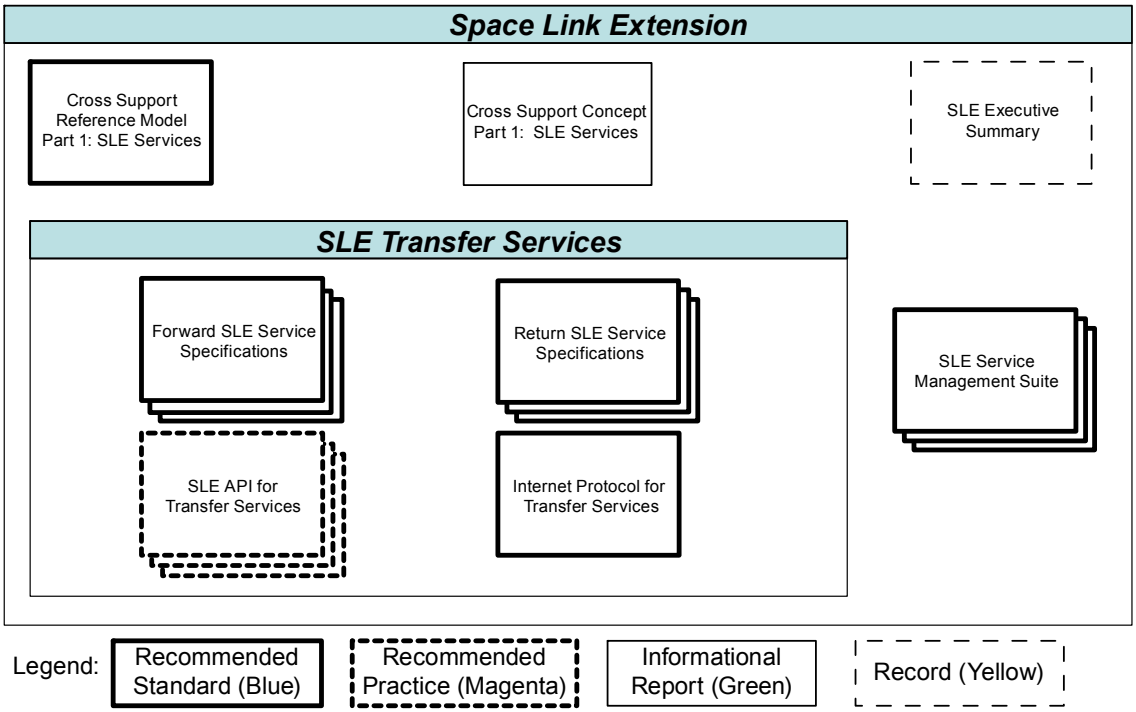

Figure 1-1: SLE Services Documentation

a) *Cross Support Concept – Part 1: Space Link Extension Services* (reference [G3]): a Report introducing the concepts of cross support and SLE services;

b) *Cross Support Reference Model—Part 1: Space Link Extension Services* (reference [1]): a Recommended Standard that defines the framework and terminology for the specification of SLE services;

c) *Return SLE Transfer Service Specifications:* a set of Recommended Standards that will provide specification of all return link SLE transfer services.

d) *Forward SLE Transfer Service Specifications:* a set of Recommended Standards that will provide specification of all forward link SLE transfer services (this Recommended Standard is one of the specifications in that set);

e) *SLE API for Transfer Services Specifications*: a set of Recommended Practices that provide specifications of an Application Program Interface; a set of Recommended Standards that provide specifications of an Application Program Interface and a mapping to TCP/IP as underlying communications service for SLE services;

f) *Internet Protocol for Transfer Services:* defines a protocol for transfer of SLE Protocol Data Units using TCP/IP as underlying communications service for SLE services;

g) *SLE Service Management Specification Suite:* a set of Recommended Standards that establish the basis for SLE service management.

Documents
Document Sharing Hub
© ISO 2021 – All rights reserved

Full document details: BS ISO 22671:2021

1.6 DEFINITIONS, NOMENCLATURE, AND CONVENTIONS

1.6.1 DEFINITIONS

1.6.1.1 Definitions from Open Systems Interconnection (OSI) Basic Reference Model

This Recommended Standard makes use of a number of terms defined in reference [7]. The use of those terms in this Recommended Standard shall be understood in a generic sense, i.e., in the sense that those terms are generally applicable to technologies that provide for the exchange of information between real systems. Those terms are:

a) abstract syntax;

b) application entity;

c) application layer;

d) flow control;

e) Open System Interconnection (OSI);

f) real system;

g) service access point (SAP).

1.6.1.2 Definitions from Abstract Syntax Notation One

This Recommended Standard makes use of the following terms defined in reference [6]:

a) Abstract Syntax Notation One (ASN.1);

b) object identifier;

c) (data) type;

d) (data) value.

NOTE – In annex A of this Recommended Standard, ASN.1 is used for specifying the abstract syntax of the invocations and returns of the operations of the Forward CLTU service. The use of ASN.1 as a descriptive language is intended to support the specification of the abstract Forward CLTU service; it is not intended to constrain implementations. In particular, there is no requirement for implementations to employ ASN.1 encoding rules. ASN.1 is simply a convenient tool for formally describing the abstract syntax of the invocations and returns of the Forward CLTU service.

1.6.1.3 Definitions from TC Synchronization and Channel Coding

This Recommended Standard makes use of the following terms defined in reference [2]:

Documents
Document Sharing Hub

© ISO 2021 – All rights reserved

Full document details: BS ISO 22671:2021

a) acquisition sequence;

b) Communications Link Transmission Unit (CLTU);

c) Carrier Modulation Mode (CMM);

d) idle sequence;

e) Physical Layer operations procedure (PLOP).

1.6.1.4 Definitions from TC Space Data Link Protocol

This Recommended Standard makes use of the following term defined in reference [3]:

Communications Link Control Word (CLCW).

1.6.1.5 Definitions from SLE Reference Model

This Recommended Standard makes use of the following terms defined in reference [1]:

a) abstract binding;

b) abstract object;

c) abstract port;

d) abstract service;

e) CLTU channel;

f) Forward CLTU service;

g) invoker;

h) Mission Data Operation System (MDOS);

i) Mission User Entity (MUE);

j) offline delivery mode;

k) online delivery mode;

l) operation;

m) performer;

n) physical channel;

o) service agreement;

p) service provider (provider);

q) service user (user);

Documents
Document Sharing Hub
© ISO 2021 – All rights reserved

Full document details: BS ISO 22671:2021

r) SLE Complex;

s) SLE Complex Management;

t) SLE data channel;

u) SLE functional group (SLE-FG);

v) SLE protocol data unit (SLE-PDU);

w) SLE service data unit (SLE-SDU);

x) SLE service package;

y) SLE transfer service instance;

z) SLE transfer service production;

aa) SLE transfer service provision;

bb) SLE Utilization Management;

cc) space link;

dd) space link data channel;

ee) space link data unit (SL-DU);

ff) space link session.

1.6.1.6 Additional Definitions

For the purposes of this Recommended Standard, the following definitions also apply.

1.6.1.6.1 Association

An association is a cooperative relationship between an SLE service-providing application entity and an SLE service-using application entity. An association is formed by the exchange of SLE protocol data units through use of an underlying communications service.

1.6.1.6.2 Communications Service

A communications service is a capability that enables an SLE service-providing application entity and an SLE service-using application entity to exchange information.

NOTE – If an SLE service user and an SLE service provider are implemented using different communications services, then interoperability between them is possible only by means of a suitable gateway. Adherence to this Recommended Standard ensures, at least in principle, that it is possible to construct such a gateway.

Documents
Document Sharing Hub

© ISO 2021 – All rights reserved

Full document details: BS ISO 22671:2021

1.6.1.6.3 Confirmed Operation

A confirmed operation is an operation that requires the performer to return a report of its outcome to the invoker.

1.6.1.6.4 Initiator

The initiator is the object that issues the request to bind to another object (the responder).

NOTE – In other words, the initiator is always the invoker of the request to bind to another object. Therefore, in the context of the request to bind, the terms 'initiator' and 'invoker' refer to the same object and are synonyms.

1.6.1.6.5 Invocation

The invocation of an operation is the making of a request by an object (the invoker) to another object (the performer) to carry out the operation.

1.6.1.6.6 Parameter

A parameter of an operation is data that may accompany the operation's invocation or return.

NOTE – The term parameter is also used to refer to mission-dependent configuration information used in production or provision of the service.

1.6.1.6.7 Performance

The performance of an operation is the carrying out of the operation by an object (the performer).

1.6.1.6.8 Port Identifier

A port identifier identifies a source or a destination in a communications system.

NOTE – See 2.6.4.6 for more information.

1.6.1.6.9 Responder

The responder is the object that receives a request to bind and completes the binding (if possible) with the initiator in order for a service association to exist between the two objects.

Documents
Document Sharing Hub
© ISO 2021 – All rights reserved

Full document details: BS ISO 22671:2021

NOTE – In other words, the responder is always the performer of the binding. Therefore, in the context of binding, the terms 'responder' and 'performer' refer to the same object and are synonyms.

1.6.1.6.10 Return

The return of an operation is a report, from the performer to the invoker, of the outcome of the performance of the operation.

1.6.1.6.11 Service Instance Provision Period

A service instance provision period is the time during which a service instance (i.e., the capability to transfer one or more SLE data channels of a given type) is scheduled to be provided.

1.6.1.6.12 Unconfirmed Operation

An unconfirmed operation is an operation that does not require a report of its outcome to be returned to the invoker by the performer.

1.6.2 NOMENCLATURE

The following conventions apply throughout this Recommended Standard:

a) the words 'shall' and 'must' imply a binding and verifiable specification;

b) the word 'should' implies an optional, but desirable, specification;

c) the word 'may' implies an optional specification;

d) the words 'is', 'are', and 'will' imply statements of fact.

1.6.3 CONVENTIONS

1.6.3.1 Specification of Operations

1.6.3.1.1 General

Section 3 of this Recommended Standard specifies the operations that constitute the Forward CLTU service. The specification of each operation is divided into subsections as follows:

Documents
Document Sharing Hub

© ISO 2021 – All rights reserved

Full document details: BS ISO 22671:2021

1.6.3.1.2 Purpose Subsection

The Purpose subsection briefly describes the purpose and functioning of the operation. Additionally, it indicates whether the operation may be invoked by the user, provider, or both; whether the operation is confirmed or unconfirmed; and whether there are any constraints on when the operation may be invoked.

1.6.3.1.3 Invocation, Return, and Parameters Subsection

The Invocation, Return, and Parameters subsection describes the parameters associated with each operation, including their semantics. A table accompanying the description of each operation lists all parameters associated with the operation and, for both the invocation and return, whether the parameter is always present, always absent, or conditionally present.

For parameters that are conditionally present, the parameter description specifies the conditions for the presence or absence of the parameter. The condition is generally based on the value of another parameter in the same invocation or return; for example, in return of an operation, the `diagnostic` parameter is present if and only if the value of the `result` parameter is 'negative result'. For a conditional parameter in a return, the condition may be based on the value of a parameter in the corresponding invocation.

In the table, the following convention is used to indicate whether a parameter is always present, always absent, or conditionally present:

M	always present (mandatory)
C	conditionally present
Blank	always absent

NOTE – Even though a parameter may be characterized as always present, its description may specify that its value is permitted to be 'null' or 'unused' or the like.

1.6.3.1.4 Effects Subsection

The Effects subsection describes the effects an operation has on the invoker, the performer, the association between them, or any combination thereof. The details of how those effects occur or the mechanisms used are outside the scope of this Recommended Standard.

1.6.3.2 Typographic Conventions

Typographic conventions used in this Recommended Standard are described in the following subsections.

Documents
Document Sharing Hub
© ISO 2021 – All rights reserved

Full document details: BS ISO 22671:2021

1.6.3.2.1 Operation Names

Names of Forward CLTU service operations appear in uppercase and begin with the characters 'CLTU-' (e.g., CLTU-TRANSFER-DATA).

1.6.3.2.2 Parameter Names

In the main text, names of parameters of Forward CLTU service operations appear in lowercase and are typeset in a fixed-width font (e.g., `responder-port-identifier`). In annex A, the corresponding name is formed by omitting any hyphens contained in the name and using mixed-case (e.g., `responderPortIdentifier`).

1.6.3.2.3 Value Names

The values of many parameters discussed in this Recommended Standard are represented by names. In the main text, these names are shown in single quotation marks (e.g., 'no such service instance'). The corresponding name in annex A is formed by omitting any hyphens or white space contained in the name and using mixed-case (e.g., `noSuchServiceInstance`). The actual value associated with the name is constrained by the type of the parameter taking on this value. Parameter types are specified in annex A of this Recommended Standard.

NOTE – The name of a value does not imply anything about type. For example, the value 'no such service instance' has the appearance of a character string but might be assigned to a parameter whose type is integer.

1.6.3.2.4 State Names

This Recommended Standard specifies the states of Forward CLTU service providers. States may be referred to by number (e.g., state 3) or by name. State names are always shown in single quotation marks (e.g., 'active').

1.6.3.2.5 SLE-PDU Names

The names of SLE-PDUs appear in mixed-case (e.g., cltuBindInvocation).

1.6.3.2.6 Data Type Definitions

Data type definitions for the Forward CLTU service are presented in annex A in the form of a set of ASN.1 modules. Regardless of the conventions used elsewhere in this Recommended Standard, the text of the ASN.1 modules is typeset entirely in a fixed-width font.

Documents
Document Sharing Hub

© ISO 2021 – All rights reserved

Full document details: BS ISO 22671:2021

1.6.3.3 Other Conventions

This Recommended Standard uses the conventions specified in reference [1].

1.7 REFERENCES

The following documents contain provisions which, through reference in this text, constitute provisions of this Recommended Standard. At the time of publication, the editions indicated were valid. All documents are subject to revision, and users of this Recommended Standard are encouraged to investigate the possibility of applying the most recent editions of the documents indicated below. The CCSDS Secretariat maintains a register of currently valid CCSDS Recommended Standards.

NOTES

1 A list of informative references is provided in annex G.

2 This document takes advantage of the harmonized terminology introduced by restructured documentation of the space link protocols (references [2], [3], and [4]). From an interoperability point of view, they do not introduce any incompatibilities with respect to the original set of space link protocol documents (references [G4], [G5], [G6], and [G7]).

[1] *Cross Support Reference Model—Part 1: Space Link Extension Services*. Issue 2. Recommendation for Space Data System Standards (Blue Book), CCSDS 910.4-B-2. Washington, D.C.: CCSDS, October 2005.

[2] *TC Synchronization and Channel Coding*. Issue 2. Recommendation for Space Data System Standards (Blue Book), CCSDS 231.0-B-2. Washington, D.C.: CCSDS, September 2010.

[3] *TC Space Data Link Protocol*. Issue 3. Recommendation for Space Data System Standards (Blue Book), CCSDS 232.0-B-3. Washington, D.C.: CCSDS, September 2015.

[4] *Communications Operation Procedure-1*. Issue 2. Recommendation for Space Data System Standards (Blue Book), CCSDS 232.1-B-2. Washington, D.C.: CCSDS, September 2010.

[5] *Time Code Formats*. Issue 4. Recommendation for Space Data System Standards (Blue Book), CCSDS 301.0-B-4. Washington, D.C.: CCSDS, November 2010.

[6] *Information Technology—Abstract Syntax Notation One (ASN.1): Specification of Basic Notation*. 4th ed. International Standard, ISO/IEC 8824-1:2008. Geneva: ISO, 2008.

[7] *Information Technology—Open Systems Interconnection—Basic Reference Model: The Basic Model*. 2nd ed. International Standard, ISO/IEC 7498-1:1994. Geneva: ISO, 1994.

Documents
Document Sharing Hub
© ISO 2021 – All rights reserved

Full document details: BS ISO 22671:2021

2 DESCRIPTION OF THE FORWARD CLTU SERVICE

2.1 OVERVIEW

The Forward CLTU service enables the user of the service to send Communications Link Transmission Units (CLTUs) to a spacecraft via an established forward space link channel. A forward space link channel is a physical channel carrying an asynchronous stream of CLTUs (reference [1]).

The service user submits CLTUs, encapsulated in Space Link Extension (SLE) Service Data Units (SLE-SDUs), by means of the CLTU-TRANSFER-DATA operation. Production of the Forward CLTU service by the provider entails processing the CLTUs transferred by the user through the necessary transformations to modulate the Radio Frequency (RF) carrier channel providing uplink communications with the spacecraft.

The Forward CLTU service transmits the CLTUs in the order in which they are submitted by the service user. The provider may perform checks to determine if the CLTU complies with applicable constraints, e.g., that the length of the CLTU is within the maximum size set by service management. However, the provider does not interpret, interrogate, or modify the contents of a CLTU. CLTUs are transmitted bit for bit as received from the service user.

CLTUs may or may not conform to the format defined in reference [2]. The Forward CLTU service may be used to uplink any octet-aligned bit pattern.

The operations defined in section 3 of this Recommended Standard enable a single Forward CLTU service user to interact with a Forward CLTU service provider to:

a) establish an association between the user and the provider;

b) send annotated CLTUs to the provider;

c) obtain notifications and reports regarding status, configuration, and performance of the service;

d) temporarily stop and later re-start the sending of CLTUs;

e) release an association.

The Sequence Controlled (AD) and Expedited (BD) Services, as defined in the Communications Operation Procedures (COP) Recommended Standard (reference [3]) are accomplished by higher layer SLE services.

The Forward CLTU service is provided only in the online delivery mode, as defined in reference [1]. The offline delivery mode is the subject of further study.

The provision of Forward CLTU service for access to one physical channel by one service user constitutes one instance of service. Only a single service instance of the Forward CLTU service may exist per physical channel at a time.

Documents
Document Sharing Hub

© ISO 2021 – All rights reserved

Full document details: BS ISO 22671:2021

2.2 SPACE LINK EXTENSION REFERENCE MODEL

2.2.1 INTRODUCTION

The Forward CLTU service is specified within the framework defined by the SLE Reference Model (reference [1]). The following subsections summarize selected concepts from the SLE reference model.

2.2.2 ABSTRACT OBJECT

An abstract object is a functional entity that interacts with other abstract objects. Objects are of different types, which determine their function and behavior. An object is characterized by its interfaces (one or more), which are called abstract ports, and the operations that are made available through those interfaces.

2.2.3 ABSTRACT SERVICE

An abstract service is the capability provided by a set of operations that an abstract object exposes at one or more of its abstract ports.

NOTE – The concept of an abstract service is to be distinguished from the concept of an (N)-service as defined in the OSI Basic Reference Model (reference [7]). The definition of (N)-service is in terms of the capability provided by one layer in the OSI architecture to the layer above it. The definition of abstract service is in terms of the capability provided by one abstract object to another abstract object. In a cross support scenario, where one Agency is providing an SLE service to another Agency, the object that provides the service typically is associated with one Agency, and the object that uses the service typically is associated with the other Agency.

2.2.4 ABSTRACT BINDING

When two abstract ports have an association established between them, they are said to be bound. The act of establishing such an association is called abstract binding. One object (the initiator) invokes a bind operation which is accepted (or rejected) by another object (the responder).

2.2.5 SERVICE USER/PROVIDER

An object that offers a service to another by means of one or more of its ports is called a service provider (provider). The other object is called a service user (user). An object may be a provider of some services and a user of others.

Documents
Document Sharing Hub
© ISO 2021 – All rights reserved

Full document details: BS ISO 22671:2021

The terms user and provider are used to distinguish the roles of two interacting objects. In this Recommended Standard, when two objects are involved in provision of a service, the object closer to the space link is considered to be the provider of the service, and the object further from the space link is considered to be the user.

2.2.6 OPERATION

An operation is a procedure or task that one object (the invoker) can request of another (the performer) through a bound port pair.

The terms invoker and performer are used to describe the interaction between two objects as the operations that constitute the service occur. One object invokes an operation that is performed by the other. For most services, each object invokes some operations and performs others.

2.3 SERVICE MANAGEMENT

SLE service management determines the number and schedule of Forward CLTU service instances to be provided, the resources required to enable those service instances, and the initial configuration of all service instances and their supporting resources. SLE service management is the subject of separate CCSDS Recommended Standards.

The SLE Reference Model (reference [1]) distinguishes between service provision and service production:

a) service provision makes available to the user the operations necessary to obtain the service;

b) service production transforms the Forward CLTU data channel to the RF carrier channel.

Certain configuration parameters are associated with provision of Forward CLTU service while others are associated with production. Configuration parameters that are associated with the production, such as bit rate and modulation index, can potentially impact SLE Complex resources. Consequently, only service management may modify production configuration parameter values. The Forward CLTU service user may modify some provision configuration parameters through operations specified in this Recommended Standard.

2.4 ARCHITECTURE MODEL – FUNCTIONAL VIEW

2.4.1 FORWARD TC SPACE LINK PROCESSING SLE FUNCTIONAL GROUP

The Forward Telecommand (TC) Space Link Processing SLE Functional Group (SLE-FG) (shown in figure 2-1) produces the Forward CLTU service.

Documents
Document Sharing Hub

© ISO 2021 – All rights reserved

Full document details: BS ISO 22671:2021

As described in reference [1], the Forward TC Space Link Processing SLE-FG consumes one CLTU data channel consisting of a stream of CLTU SLE-SDUs. The SLE-SDUs that encapsulate the CLTUs contain control and annotation data that specify radiation time and other parameters to aid in processing the data (see 3.6). The Forward TC Space Link Processing SLE-FG uses these data to extract the CLTUs and inject them into the asynchronous physical channel.

NOTE – Per physical forward channel, only a single instance of the Forward CLTU service is supported at any point in time.

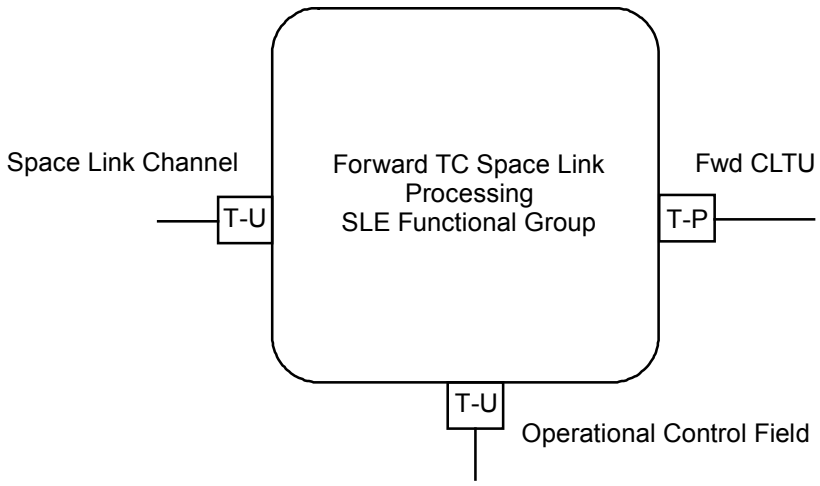

Figure 2-1: Forward TC Space Link Processing SLE-FG

The Forward TC Space Link Processing SLE-FG performs the following functions with respect to the Forward CLTU service:

a) consumes one CLTU data channel and extracts CLTUs encapsulated in SLE Service Data Units (SLE-SDUs);

b) consumes one Operational Control Field (OCF) data channel and extracts the Communications Link Control Words (CLCWs). Based on the values in the CLCWs, the Forward CLTU service determines whether the physical channel is available;

NOTE – CLCWs may be ignored, as an option set by Service Management. See 3.1.9 and table 3-11.

c) performs the following:

1) generates the acquisition sequence and idle sequence on the physical channel in accordance with the PLOP in effect;

2) utilizes the underlying antenna steering capabilities provided by the ground element;

Documents
Document Sharing Hub
© ISO 2021 – All rights reserved

Full document details: BS ISO 22671:2021

3) modulates the CLTUs as a stream of bits on the ground-to-space RF channel; and

4) radiates the signal to the spacecraft.

2.4.2 FORWARD CLTU SERVICE PRODUCTION AND PROVISION

Forward CLTU **production** is concerned with radiating CLTUs extracted from a stream of SLE-SDUs according to the CLTU control and annotation information in the SLE-SDU and according to the configuration set up by service management. Forward CLTU service **provision** is concerned with receiving a stream of SLE-SDUs from a Forward CLTU service user. Service provision addresses such matters as when service is provided (e.g., service start and stop times), and how service is provided (e.g., which events are notified to the user).

The SLE-SDUs consumed by the Forward CLTU service are sent by the service user by means of the Forward CLTU service operations defined in section 3. These operations also provide additional functionality to facilitate the provision of service, i.e., enabling the exchange of SLE-SDUs across a remote interface. The service operations are realized as SLE protocol data units (SLE-PDUs) which are exchanged between the Forward CLTU service provider and the Forward CLTU service user by means of an underlying communications service. The general relationship between SL-DUs, SLE-SDUs, and SLE-PDUs is illustrated in figure 2-2.

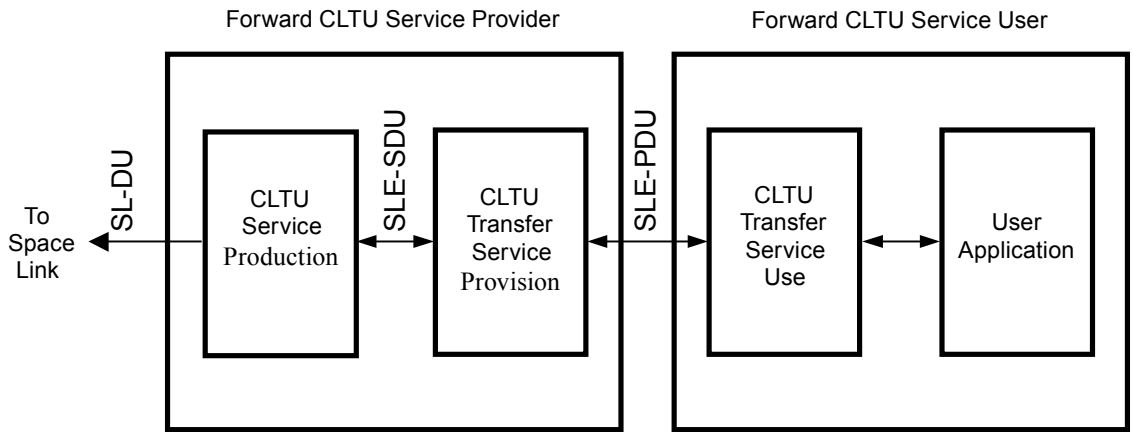

Figure 2-2: Forward CLTU Service Production and Provision

Production of the Forward CLTU service by the provider occurs during the space link session; in general, service production will largely overlap with service provision. Production status affects the provision of the service, as specified in sections 3 and 4, and reviewed in annex B.

© ISO 2021 – All rights reserved

Documents
Document Sharing Hub

Full document details: BS ISO 22671:2021

2.5 ARCHITECTURE MODEL – CROSS-SUPPORT VIEW

The management and control of the production and provision of the SLE transfer services is described in general terms in reference [1]. Figure 2-3 shows an example operational scenario and the related binding of the Forward CLTU transfer service ports and SLE management ports. This example shows an SLE Complex with one Forward Space Link Processing SLE-FG instance; it is providing one instance of Forward CLTU service to a Mission Data Operations System (MDOS). As this figure shows, only a single Mission User Entity can use the Forward CLTU service provided by a single Forward Space Link Processing SLE-FG.

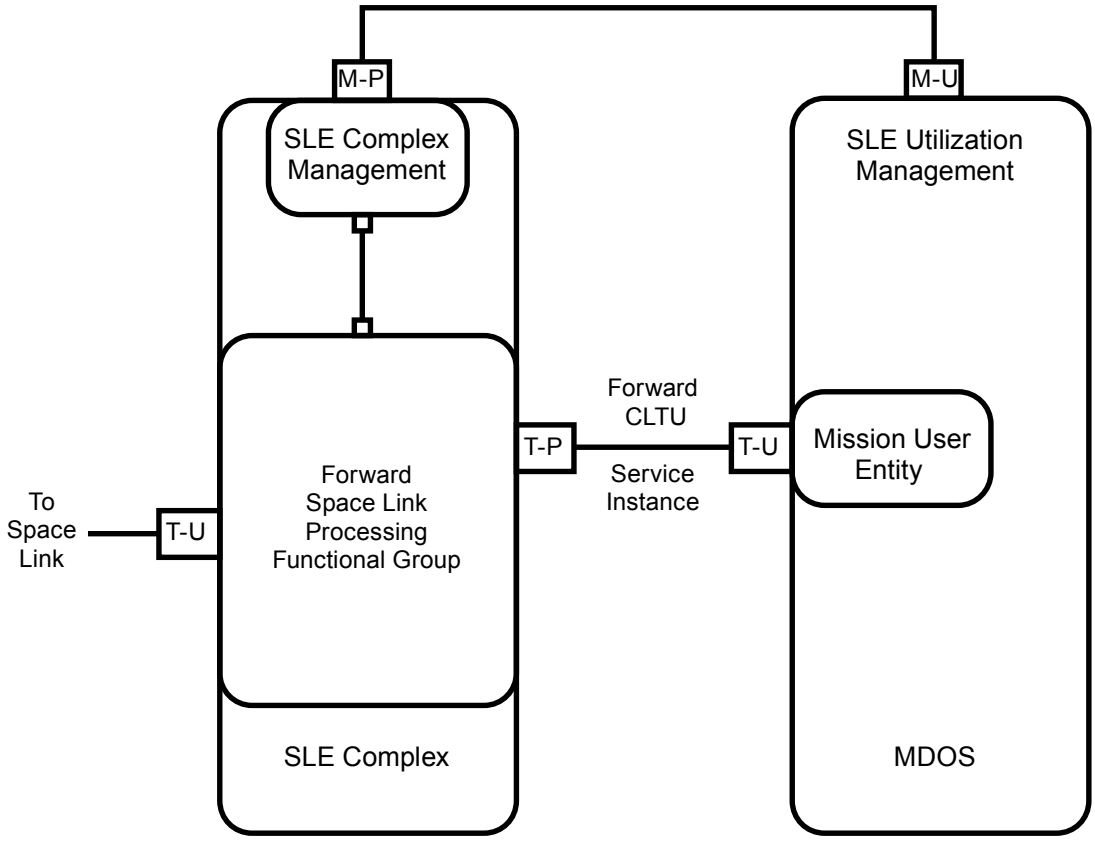

Figure 2-3: Example of Management and Provision of Forward CLTU Service

© ISO 2021 – All rights reserved

Documents Document Sharing Hub

Full document details: BS ISO 22671:2021

2.6 FUNCTIONAL DESCRIPTION

2.6.1 GENERAL

This subsection describes the Forward CLTU service with respect to scheduling, configuration, underlying services, provider states and protocol considerations.

2.6.2 SCHEDULING AND CONFIGURATION

SLE Utilization Management negotiates with SLE Complex Management to establish mutually agreed upon SLE service packages. Among other things, SLE service packages specify what service instances are to be provided, when those services are to be provided, and what resources are needed to enable those services.

Service packages also specify the initial values of the mission-dependent parameters required for service production and provision. Forward CLTU service production parameters include such things as bit rate, modulation index, and subcarrier frequency. Provision parameters include such things as scheduled start and stop times of the Forward CLTU service instance.

Service production is guaranteed to occur only as needed to support service packages that have been scheduled and mutually agreed upon by SLE Complex Management and SLE Utilization Management. Service provision occurs only within the bounds of the agreed upon schedule of service instances and only during those periods when there is an association between the service provider and the service user.

2.6.3 UNDERLYING SERVICES

The CLTU service does not depend on any other SLE transfer service. Provision of the CLTU Transfer service does depend on:

a) service management for scheduling, resources, and configuration; the schedule for a Forward CLTU service instance must be compliant with the schedule of the underlying equipment such as antennas, etc. The Forward CLTU service relies on service management actions for establishment of the space link, management of the PLOP and, when possible, recovery from production interruption;

b) the availability of a suitable communications service to enable the exchange of information between the CLTU service user and provider; and

c) the functioning of CLTU production resources (e.g., modulator(s), up-converter) to produce the forward physical channel.

Documents
Document Sharing Hub

© ISO 2021 – All rights reserved

Full document details: BS ISO 22671:2021

2.6.4 PROTOCOL DESCRIPTION

2.6.4.1 CLTU Operations

The operations that constitute the Forward CLTU service are listed in table 2-1. Section 3 of this Recommended Standard contains the detailed specification of these operations.

Table 2-1: Forward CLTU Service Operations

Service Operation	Invoked By	Purpose	Con-firmed
CLTU-BIND	Initiator (User)	To establish an association with the provider	Yes
CLTU-UNBIND	Initiator (User)	To release an association previously established by a CLTU-BIND operation	Yes
CLTU-START	User	To request that the SLE service provider prepare to accept CLTU-TRANSFER-DATA operations	Yes
CLTU-STOP	User	To request that the SLE service provider stop service provision and production.	Yes
CLTU-TRANSFER-DATA	User	To transfer a CLTU to the service provider	Yes
CLTU-ASYNC-NOTIFY	Provider	To notify the user of an event affecting production or provision of the Forward CLTU service	No
CLTU-SCHEDULE-STATUS-REPORT	User	To request that the provider send a status report immediately or periodically, or stop reporting	Yes
CLTU-STATUS-REPORT	Provider	To send a status report to the user	No
CLTU-GET-PARAMETER	User	To ascertain the value of an SLE service parameter (see table 3-11)	Yes
CLTU-THROW-EVENT	User	To forward an event that requires Complex Management to take the actions defined for this event	Yes
CLTU-PEER-ABORT	User or Provider	To notify the peer system that the local system detected an error that requires the association to be terminated	No

2.6.4.2 States of the Service Provider

Once a Forward CLTU service instance is created, the Forward CLTU service provider is in one of three states, as follows:

Documents
Document Sharing Hub
© ISO 2021 – All rights reserved

Full document details: BS ISO 22671:2021

a) State 1 ('unbound'): In state 1, all resources required to enable the provision of the Forward CLTU service have been allocated, and all objects required to provide the service have been instantiated. However, no association yet exists between the user and the provider (i.e., the Forward CLTU transfer service provider port is not bound).

b) State 2 ('ready'): In state 2, an association has been established between the user and the provider, and they may interact by means of the operations described in section 3 of this Recommended Standard. However, sending of CLTUs from the user to the provider (by means of the CLTU-TRANSFER-DATA operation) is not permitted. The user may enable the delivery of CLTUs by means of the appropriate service operation (CLTU-START), which, in turn, will cause the provider to transition to state 3 ('active').

c) State 3 ('active'): State 3 resembles state 2 ('ready'), except that now the user can send CLTUs and the provider is enabled to radiate CLTUs to the spacecraft. The service continues in this state until the user invokes the CLTU-STOP operation to cause the provider to suspend transmission of CLTUs and transition back to state 2.

A simplified state transition diagram for the Forward CLTU service provider is shown in figure 2-4. A detailed state transition matrix is provided in 4.2.

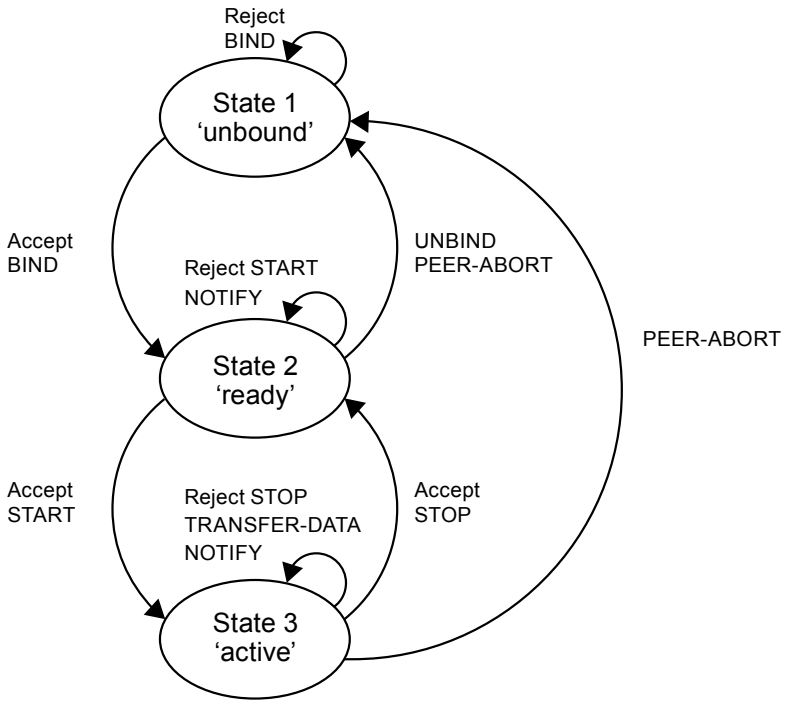

Figure 2-4: Simplified Forward CLTU Service Provider State Transition Diagram

© ISO 2021 – All rights reserved

Documents
Document Sharing Hub

Full document details: BS ISO 22671:2021

2.6.4.3 Terminating an Association

An association is released normally when a CLTU-UNBIND is issued by the user (the initiator of the association) and accepted by the provider (the responder). An association may be aborted by either the user or the provider by means of the CLTU-PEER-ABORT operation. An association may also be aborted because of a failure in the underlying communications system. Such failures are signaled to the local application entity by the 'protocol abort' event described in 4.1.5.

2.6.4.4 Effects of Association Termination

The production of CLTUs stops immediately following the termination of an association, except for a CLTU in the process of being radiated. Any buffered CLTUs are discarded. The only exception to this occurs when the association is terminated due to a protocol abort, and the protocol-abort-mode option has been set to 'continue'; in this case, production of CLTUs continues, and buffered CLTUs are not discarded.

When an association is terminated, no further operations can be exchanged between the user and the provider. The systems may re-establish an association via a new CLTU-BIND operation, if that is consistent with the schedule for provision of service. Status information is not preserved after an association terminates and is not available to the new association with the following exceptions:

a) statistics reported by means of the CLTU-STATUS-REPORT operation, such as the number of CLTUs processed (see 3.9), shall be accumulated for the entire service instance provision period;

b) parameters that serve to relate notifications on an activity to operations that triggered this activity will not be altered when the association is released or aborted.

2.6.4.5 Technology-specific Aspects—Interoperability and the Underlying Communications Service

This Recommended Standard defines the Forward CLTU service. Provision of the Forward CLTU service in a real system also requires a specification of how the service is mapped to a communications service, such that all invocations and returns of the Forward CLTU service operations can be conveyed between the user and the provider. In order not to restrict the applicability of this Recommended Standard to a specific communications technology, as few assumptions as possible have been made about the characteristics of the underlying communications service (see 1.3.1).

The service interface between the user and the provider is specified in this Recommended Standard in terms of the operations that the service provides. Those operations are realized by mapping the service operation invocations and returns to protocol data units that can be conveyed by means of the underlying communications service. This Recommended Standard conceptualizes such mapping in two parts:

Documents
Document Sharing Hub
© ISO 2021 – All rights reserved

Full document details: BS ISO 22671:2021

a) Forward CLTU service operation invocations and returns (defined in section 3) are mapped to SLE-PDUs (defined in annex A);

b) SLE-PDUs are mapped to protocol data units that can be conveyed by means of the underlying communications service.

The mapping of Forward CLTU service operation invocations and returns to SLE-PDUs is specified by this Recommended Standard. The mapping of SLE-PDUs to an underlying communications service is intentionally outside the scope of this Recommended Standard (e.g., so that the Forward CLTU service may be mapped to more than one communications technology). In order to achieve interoperability, the user and provider must conform not only to this Recommended Standard but also to an agreed upon specification of the mapping of the Forward CLTU service to the underlying communications service. The specification of a mapping of the Forward CLTU service onto a particular communications service must address such points as:

a) selection of communications network(s) to ensure connectivity;

b) compatible configuration of protocol stacks (e.g., timeout values);

c) specification of port-identifiers, and their translation onto the communications technology;

d) specification of security related information.

Figure 2-5 illustrates a communications realization of the Forward CLTU service that results from such a mapping. The specification of such mappings is the subject of separate CCSDS Recommended Standards.

Documents
Document Sharing Hub

© ISO 2021 – All rights reserved

Full document details: BS ISO 22671:2021

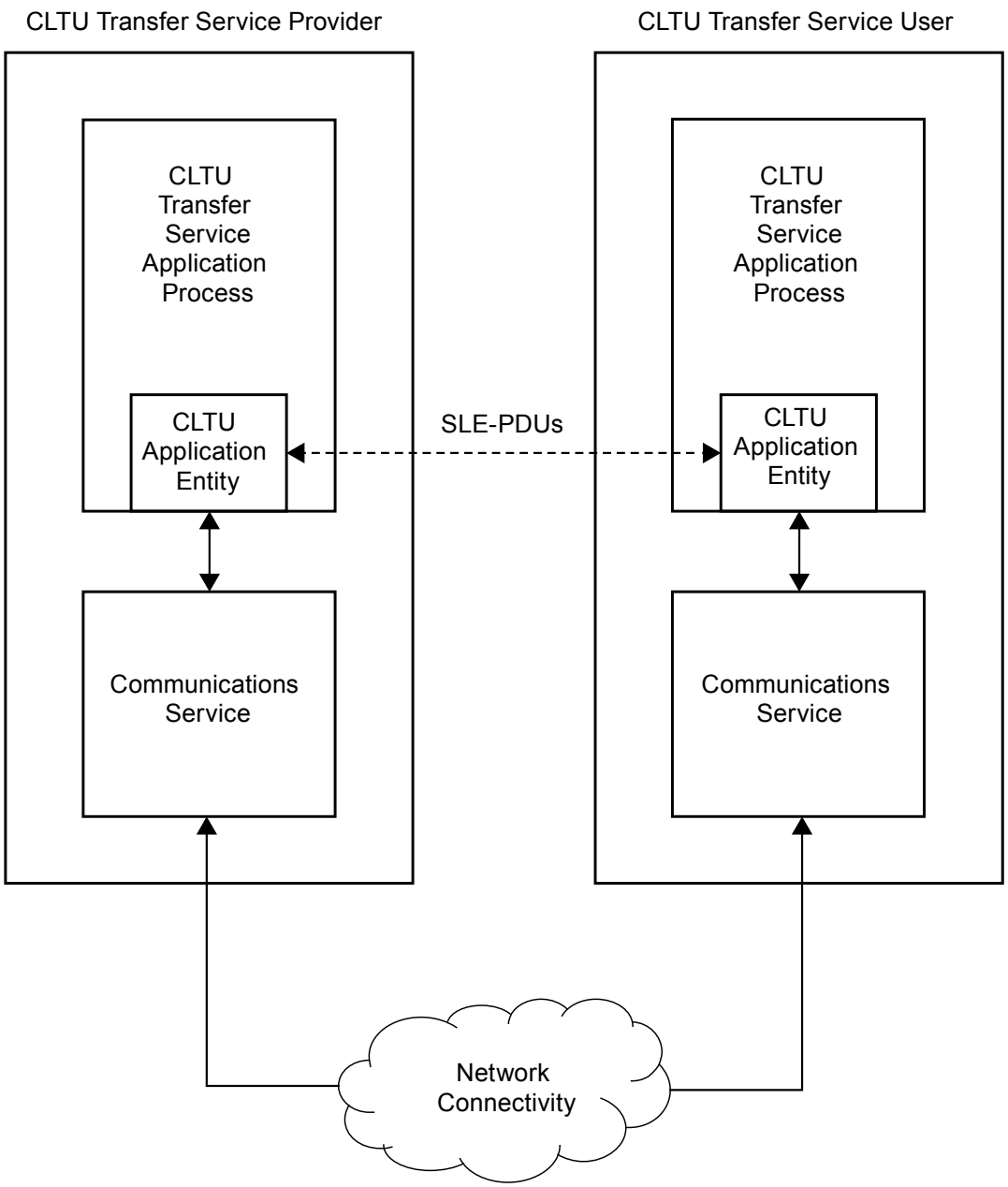

Figure 2-5: Communications Realization of Forward CLTU Service

Because the operations of the Forward CLTU service are relatively simple, once an association is in place between the service user and the service provider, the technology specific elements involved in the exchange of SLE-PDUs are generally minor. However, the way an association is established (i.e., the binding) tends to vary significantly depending on the communications technology in use. Nonetheless, the CLTU-BIND and CLTU-UNBIND

Documents
Document Sharing Hub
© ISO 2021 – All rights reserved

Full document details: BS ISO 22671:2021

operations as specified in this document are intended to be 'technology neutral'. This neutrality is achieved as described in the following paragraphs.

For purposes of the communications mapping, the endpoints of an SLE association are identified by port identifiers, namely, an 'initiator port identifier' and a 'responder port identifier'. The port identifiers represent all the technology-specific addressing information needed to establish communications between the user and provider and to route SLE-PDUs between them. The initiator port identifier identifies the endpoint that will invoke the CLTU-BIND operation (initiator). The responder port identifier identifies the endpoint that will perform the CLTU-BIND operation (responder). Generally speaking, the information represented by a port identifier consists of:

a) information needed to route data between two real systems over a communications channel or network; and

b) information needed to route data within a real system to a particular application entity.

For example, the information represented by a port identifier might be the combination of an Internet Protocol (IP) network address and a Transmission Control Protocol (TCP) port number or the combination of an OSI network address and an associated set of service access points (SAPs).

The exact relationship between SLE port identifiers and communications ports provided by the underlying communications service must be specified by the mapping of the Forward CLTU service to the underlying communications service.

One possible mapping of the SLE transfer service to the TCP/IP communications service is specified in [G8]. As part of this mapping, also issues such as sizing of TCP buffers in accordance with the bandwidth-delay product of the communication link and ways to manage relative priority of transfer services concurrently using the same connectivity are to be addressed.

In order for an SLE association to be established, SLE Complex Management and SLE Utilization Management must agree beforehand on the responder port identifier for the association. The responder needs the information represented by the responder port identifier to ensure that resources are allocated to recognize and respond to a CLTU-BIND invocation for that association. The initiator needs the information to ensure that the CLTU-BIND invocation will be communicated to the appropriate responder.

In general, it is not necessary for SLE Complex Management and SLE Utilization Management to agree beforehand on the initiator port identifier for the association. Rather, the initiator should communicate that information to the responder in conjunction with the CLTU-BIND invocation. The exact means by which the initiator port identifier is provided to the responder is technology-specific and must be specified by the mapping of the Forward CLTU service to the underlying communications service.

Documents
Document Sharing Hub

© ISO 2021 – All rights reserved

Full document details: BS ISO 22671:2021

The responder port identifier is included as a parameter of the CLTU-BIND operation. While it is only necessary that the SLE application entity communicate the information represented by the port identifiers to the underlying communications service, the responder port identifier is provided as a parameter of the CLTU-BIND operation to allow for the possible simplification of the implementation of a gateway.

The information represented by the responder port identifier is technology-specific. In order to define the CLTU-BIND operation in a way that is not technology-specific, the `responder-port-identifier` parameter of the CLTU-BIND operation is defined to be a logical name. A logical name is an arbitrary identifier that has an appropriately chosen and agreed upon translation to technology-specific information. Prior to the start time of a service instance, SLE Complex Management and SLE Utilization must mutually agree upon the value of the responder port identifier (and its translation) applicable to that service instance. The actual process of translating logical names to technology-specific information is considered a local matter. The translation methodology may rely on simple techniques such as look-up tables or may use more elaborate mechanisms such as naming or directory services.

The above discussion describes the case that both the user and provider applications are implemented using the same communications service. It is possible to achieve interoperability even if the user and provider use different communications services. However, in that case interoperability requires the use of an appropriate gateway.

2.6.4.6 Buffering

The Forward CLTU service buffers the CLTUs for the primary purpose of maintaining radiation of a steady stream of CLTUs despite variable latency over the ground communications channel. All transfers of CLTUs from the service user to the service provider must occur within the scheduled service instance provision period.

2.7 OPERATIONAL SCENARIO

Prior to the actual provision of service, start and stop times for both the space link session and the associated Forward CLTU service instance are negotiated between SLE Complex Management and SLE Utilization Management. Configuration and other information needed to enable the service are also agreed.

Some time before the scheduled start time of the Forward CLTU service instance, the service instance is created by SLE Complex Management. Initially, the service provider is in state 1 (‘unbound’). At the scheduled start time of the space link session, the SLE Complex establishes the forward link to the spacecraft and initiates the production of Forward CLTU service. Typically (but not necessarily) the start time of the service instance will precede by a small margin the start time of the space link session to allow the user to bind to the service before the start of the space link session.

Documents
Document Sharing Hub
© ISO 2021 – All rights reserved

Full document details: BS ISO 22671:2021

The following illustrates a typical sequence of operations between the user and the provider of the Forward CLTU service. A complete definition of the operations is found in section 3; the formal specification of provider behavior is presented in section 4.

a) The user invokes the CLTU-BIND operation to establish an association.

b) The provider, when configured to monitor uplink status by examining the No RF Available and/or No Bit Lock flags returned from the spacecraft in the Communications Link Control Word (CLCW), performs the necessary operations to receive the Operational Control Field (OCF) as provided by the Return Frame Processing SLE-FG.

c) The provider monitors equipment readiness, the status of the physical channel and (when configured to do so) the uplink status. When production status changes to 'operational' the provider sends CLTU-ASYNC-NOTIFY to the user.

NOTE – Modulation of the uplink signal with acquisition sequence and idle sequence, in accordance with the PLOP in effect, is under the control of service management.

d) The user sends CLTU-START, and the provider transitions to state 3, 'active'.

e) The user sends a CLTU-TRANSFER-DATA operation to the provider. The provider verifies the invocation, and if acceptable, buffers the CLTU until the specified `earliest-radiation-time` is reached.

f) Additional CLTUs may be sent by the user and buffered.

NOTE – The user may perform steps, d), e) and f), invoking CLTU-START and CLTU-TRANSFER-DATA, before the production status becomes operational as described in step c).

g) At the time specified for start of radiation, if production status is operational, the first CLTU is injected into the physical channel and modulated onto the RF carrier. The signal is radiated to the spacecraft. If no start time was specified in the CLTU-TRANSFER-DATA operation, the CLTU is radiated as soon as received, or whenever the production status becomes operational, if that is later.

h) Successive CLTUs are processed in similar fashion after the delay period (if any) specified in the preceding CLTU is satisfied.

i) The user transfers the last CLTU to the provider.

j) The provider completes processing the buffered CLTUs. When the provider's CLTU buffer is empty, it sends CLTU-ASYNC-NOTIFY to inform the user.

k) The user sends CLTU-STOP and the provider transitions to state 2, 'ready'.

l) The user performs CLTU-UNBIND to release the association.

© ISO 2021 – All rights reserved

Documents
Document Sharing Hub

Full document details: BS ISO 22671:2021

2.8 SECURITY ASPECTS OF THE SLE FORWARD CLTU TRANSFER SERVICE

2.8.1 SECURITY BACKGROUND/INTRODUCTION

The SLE transfer services explicitly provide authentication and access control. Additional security capabilities, if required, are levied on the underlying communication services that support the SLE transfer services. The SLE transfer services are defined as layered application services operating over underlying communication services that must meet certain requirements but which are otherwise unspecified. Selection of the underlying communication services over which real SLE implementations connect is based on the requirements of the communicating parties and/or the availability of CCSDS-standard communication technology profiles and proxy specifications. Different underlying communication technology profiles are intended to address not only different performance requirements but also different security requirements. Missions and service providers are expected to select from these technology profiles to acquire the performance and security capabilities appropriate to the mission. Specification of the various underlying communication technologies, and in particular their associated security provisions, are outside the scope of this Recommended Standard.

The SLE Forward CLTU transfer service transfers data that is destined for a mission spacecraft. As such, the SLE Forward CLTU transfer service has custody of the data for only a portion of the end-to-end data path between MDOS and mission spacecraft. Consequently the ability of an SLE transfer service to secure the transfer of mission spacecraft data is limited to that portion of the end-to-end path that is provided by the SLE transfer service (i.e., the terrestrial link between the MDOS and the ground termination of the ground-space link to the mission spacecraft). End-to-end security must also involve securing the data as it crosses the ground-space link, which can be provided by some combination of securing the mission data itself (e.g., encryption of the mission data within CCSDS space packets) and securing the ground-space link (e.g., encryption of the physical ground-space link). Thus while the SLE Forward CLTU transfer service plays a role in the end-to-end security of the data path, it does not control and cannot ensure that end-to-end security. This component perspective is reflected in the security provisions of the SLE transfer services.

2.8.2 STATEMENTS OF SECURITY CONCERNS

This section identifies SLE Forward CLTU transfer service support for capabilities that responds to these security concerns in the areas of data privacy, data integrity, authentication, access control, availability of resources, and auditing.

2.8.2.1 Data Privacy (also known as Confidentiality)

This SLE Forward CLTU transfer service specification does not define explicit data privacy requirements or capabilities to ensure data privacy. Data privacy is expected to be ensured outside of the SLE transfer service layer, by the mission application processes that communicate over the SLE transfer service, in the underlying communication service that

Documents
Document Sharing Hub
© ISO 2021 – All rights reserved

Full document details: BS ISO 22671:2021

lies under the SLE transfer service, or some combination of both. For example, mission application processes might apply end-to-end encryption to the contents of the CCSDS space link data units carried as data by the SLE transfer service. Alternatively or in addition, the network connection between the SLE entities might be encrypted to provide data privacy in the underlying communication network.

2.8.2.2 Data Integrity

The SLE Forward CLTU service requires that each transferred CLTU be accompanied by a sequence number, which must increase monotonically. Failure of a CLTU to be accompanied by the expected sequence number causes the CLTU to be rejected (see 3.6.2.13.1 d)). This constrains the ability of a third party to inject additional command data into an active Forward CLTU transfer service instance.

The SLE Forward CLTU transfer service defines and enforces a strict sequence of operations that constrain the ability of a third party to inject operation invocations or returns into the transfer service association between a service user and provider (see 4.2.2). This constrains the ability of a third party to seize control of an active Forward CLTU transfer service instance without detection.

The SLE Forward CLTU transfer service requires that the underlying communication service transfer data in sequence, completely and with integrity, without duplication, with flow control that notifies the application layer in the event of congestion, and with notification to the application layer in the event that communication between the service user and the service provider is disrupted (see 1.3.1). No specific mechanisms are identified, as they will be an integral part of the underlying communication service.

2.8.2.3 Authentication

This SLE Forward CLTU transfer service specification defines authentication requirements (see 3.1.5), and defines `initiator-identifier`, `responder-identifier`, `invoker-credentials`, and `performer-credentials` parameters of the service operation invocations and returns that are used to perform SLE transfer service authentication. The procedure by which SLE transfer service operation invocations and returns are authenticated is described in annex F of the Cross Support Concept Green Book (reference [G3]). The SLE transfer service authentication capability can be selectively set to authenticate at one of three levels: authenticate every invocation and return, authenticate only the BIND operation invocation and return, or perform no authentication. Depending upon the inherent authentication available from the underlying communication network, the security environment in which the SLE service user and provider are operating, and the security requirements of the spaceflight mission, the SLE transfer service authentication level can be adapted by choosing the SLE operation invocation and returns that shall be authenticated. Furthermore the mechanism used for generating and checking the credentials and thus the level of protection against masquerading (simple or strong authentication) can be selected in accordance with the results of a threat analysis.

Documents
Document Sharing Hub

© ISO 2021 – All rights reserved

Full document details: BS ISO 22671:2021

2.8.2.4 Access Control

This SLE Forward CLTU transfer service specification defines access control requirements (see 3.1.4), and defines `initiator-identifier` and `responder-identifier` parameters of the service operation invocations and returns that are used to perform SLE transfer service access control. The procedure by which access to SLE transfer services is controlled is described in annex F of the Cross Support Concept Green Book (reference [G3]).

2.8.2.5 Availability of Resources

The SLE transfer services are provided via communication networks that have some limit to the resources available to support those SLE transfer services. If these resources can be diverted from their support of the SLE transfer services (in what is commonly known as 'denial of service') then the performance of the SLE transfer services may be curtailed or inhibited. This SLE Forward CLTU transfer service specification does not define explicit capabilities to prevent denial of service. Resource availability is expected to be ensured by appropriate capabilities in the underlying communication service. The specific capabilities will be dependent upon the technologies used in the underlying communication service and the security environment in which the transfer service user and provider operate.

2.8.2.6 Auditing

This SLE Forward CLTU transfer service specification does not define explicit security auditing requirements or capabilities. Security auditing is expected to be negotiated and implemented bilaterally between the spaceflight mission and the service provider.

2.8.3 POTENTIAL THREATS AND ATTACK SCENARIOS

The SLE Forward CLTU transfer service depends on unspecified mechanisms operating above the SLE transfer service (between a mission spacecraft application process and its peer application process on the ground), underneath the SLE transfer service in the underlying communication service, or some combination of both, to ensure data privacy (confidentiality). If no such mechanisms are actually implemented, or the mechanisms selected are inadequate or inappropriate to the network environment in which the mission is operating, an attacker could read the command data contained in the Forward CLTU protocol data units as they traverse the WAN between service user and service provider.

The SLE Forward CLTU transfer service constrains the ability of a third party to seize control of an active SLE transfer service instance, or to inject extra command data into a service instance, but it does not specify mechanisms that would prevent an attacker from intercepting the protocol data units and replacing the contents of the `data` parameter. The prevention of such a replacement attack depends on unspecified mechanisms operating above the SLE transfer service (between a mission spacecraft application process and its peer

Documents
Document Sharing Hub
© ISO 2021 – All rights reserved

Full document details: BS ISO 22671:2021

application process on the ground), underneath the SLE transfer service in the underlying communication service, in bilaterally-agreed extra capabilities applied to the SLE transfer service (e.g., encryption of the `data` parameter) or some combination of the three. If no such mechanisms are actually implemented, or the mechanisms selected are inadequate or inappropriate to the network environment in which the mission is operating, an attacker could 'hijack' an established SLE Forward CLTU transfer service instance and overwrite the commands in the protocol data units to subvert or destroy the operation of the spacecraft.

If the SLE transfer service authentication capability is not used and if authentication is not ensured by the underlying communication service, attackers may somehow obtain valid `initiator-identifier` values and use them to initiate SLE transfer service instances by which they could subvert or destroy the mission.

The SLE Forward CLTU transfer service depends on unspecified mechanisms operating in the underlying communication service to ensure that the supporting network has sufficient resources to provide sufficient support to legitimate users. If no such mechanisms are actually implemented, or the mechanisms selected are inadequate or inappropriate to the network environment in which the mission is operating, an attacker could prevent legitimate users from communicating with their spacecraft, causing degradation or even loss of the mission.

If the provider of SLE Forward CLTU transfers service provides no security auditing capabilities, or if a user chooses not to employ auditing capabilities that do exist, then attackers may delay or escape detection long enough to do serious (or increasingly serious) harm to the mission.

2.8.4 CONSEQUENCES OF NOT APPLYING SECURITY

The consequences of not applying security to the SLE Forward CLTU transfer service are possible degradation and loss of ability to command the spacecraft, and even loss of the spacecraft itself.

Documents
Document Sharing Hub

© ISO 2021 – All rights reserved

Full document details: BS ISO 22671:2021

3 FORWARD CLTU SERVICE OPERATIONS

NOTE – This section (3) specifies the processing of valid SLE-PDUs (i.e., those that are recognized as the invocation or return of a CLTUS service operation). Subsection 3.1 specifies behaviors that are generally applicable to all operations. Subsections 3.2 through 3.12 specify individual operations. Handling of invalid SLE-PDUs is specified in subsection 4.1.

3.1 GENERAL CONSIDERATIONS

3.1.1 RESULT OF OPERATIONS

3.1.1.1 All confirmed operations shall report on the outcome of the operation in a return, except as specified otherwise in section 4.

3.1.1.2 All returns shall include a `result` parameter that indicates whether the outcome of the operation was successful ('positive result') or unsuccessful ('negative result').

3.1.1.3 In the event of a 'negative result', the return shall also include a `diagnostic` parameter that is descriptive of the reason for the 'negative result'.

NOTE – Possible values of the `diagnostic` parameter are listed in the description of each operation.

3.1.1.4 A `diagnostic` parameter value of 'other reason' shall be returned only if no other value in the list adequately describes the reason for the 'negative result'.

3.1.2 PARAMETER TYPES

The types of all parameters shall conform to the abstract syntax specified in annex A.

NOTE – Some parameter types in annex A are chosen such that possible future extensions of the range of allowed values of a parameter will not cause a type mismatch. For example, parameters that logically are of the 'enumerated' type are specified as being of the 'named integer' type.

3.1.3 PARAMETER CHECKING

3.1.3.1 Validity checks shall be performed on the values of parameters associated with an operation.

NOTE – Rules governing the validity of parameter values are included in the specification of individual operations. General reasons for regarding a parameter value as invalid are specified in the following subsections.

Documents
Document Sharing Hub
© ISO 2021 – All rights reserved

Full document details: BS ISO 22671:2021

3.1.3.2 A parameter shall be treated as invalid if:

a) its value is outside the range or not in the set of values currently permitted by service management for the given parameter;

NOTE – A conformant implementation shall be capable of supporting the full range or set as specified in annex A.

b) its value is in conflict with the value of another parameter in the same invocation (e.g., if in CLTU-TRANSFER-DATA the time specified in the `earliest-radiation-time` parameter is later than the time specified in the `latest-radiation-time` parameter);

c) its value is in conflict with the current provider configuration (e.g., the minimum delay time between CLTUs parameter as set by service management is longer than the `delay-time` value the CLTU-TRANSFER-DATA invocation contains).

3.1.3.3 If a parameter value is not valid, the operation shall not be performed, and, for confirmed operations, a report of 'negative result' shall be returned to the invoker.

3.1.3.4 Except as noted in 3.2.2.11, checks for invalid parameters or for other conditions that can cause a report of 'negative result' should be performed in the order in which diagnostics are listed in the descriptions of the operations, and the `diagnostic` parameter should be set to the value defined for the first problem found.

3.1.3.5 In the case that an implementation does not adhere to the sequence of checks as specified by the sequence of `diagnostic` values, such implementation shall specify the sequence in which the checks are actually performed.

3.1.4 ACCESS CONTROL

3.1.4.1 The Forward CLTU service shall implement access control based on the identity of the initiator and responder. Access control is performed at two levels:

a) the initiator must be registered at the responder and the responder must be registered at the initiator;

b) the initiator and responder must be authorized for the given service instance.

3.1.4.2 The initiator shall have access to a registry of authorized responders and the responder shall have access to a registry of authorized initiators. These registries shall be maintained by SLE Complex Management and SLE Utilization Management, respectively.

3.1.4.3 Service management shall specify the authorized initiator and responder for each service instance.

Documents
Document Sharing Hub

© ISO 2021 – All rights reserved

Full document details: BS ISO 22671:2021

3.1.4.4 The initiator and responder shall indicate their identity by setting the parameters `initiator-identifier` and `responder-identifier` in the CLTU-BIND operation to the values assigned by service management.

3.1.5 AUTHENTICATION

NOTE – Requirements for security depend on the application and the environment of the SLE Complexes and the MDOS (e.g., whether closed or public networks are used or if access is only from physically restricted areas). In many environments, security may be provided by the communications service, transparently to the SLE application. This Recommended Standard does not preclude the use of security features that are provided by the communications service or the local environment, nor does it assume the availability of such features.

3.1.5.1 The Forward CLTU service shall provide the following options with respect to level of authentication of invocations and returns of operations:

a) 'all': all Forward CLTU invocations and returns, except the invocation of CLTU-PEER-ABORT, shall be authenticated;

b) 'bind': only the CLTU-BIND invocation and return shall be authenticated;

c) 'none': no Forward CLTU invocations or returns shall be authenticated.

3.1.5.2 SLE Complex Management and SLE Utilization Management shall agree on the level of authentication to be required for an association between a service user and a Forward CLTU service provider and shall configure both entities accordingly.

3.1.5.3 SLE Complex Management and SLE Utilization Management shall agree on the algorithm used to generate and check credentials parameters and make this algorithm known to the service user and service provider, together with associated parameters such as passwords or keys as necessary for the adopted algorithm.

NOTES

1 The specification of the algorithms themselves is outside the scope of this Recommended Standard.

2 The `initiator-identifier` and `responder-identifier` parameters of the CLTU-BIND operation identify the user and provider, respectively, and therefore the applicable authentication level and algorithm necessary to generate and check credentials.

3.1.5.4 For operations for which authentication of credentials is required by terms of the agreement between SLE Complex Management and SLE Utilization Management:

Documents
Document Sharing Hub
© ISO 2021 – All rights reserved

Full document details: BS ISO 22671:2021

a) invocations shall include an `invoker-credentials` parameter to permit the performer to authenticate the invocation; and

b) returns shall include a `performer-credentials` parameter to permit the invoker to authenticate the return.

3.1.5.5 For operations for which authentication is not required, the `invoker-credentials` or `performer-credentials` parameter should be set to the value 'unused' to signify that the invocation or return does not carry credentials.

3.1.6 BLOCKING AND NON-BLOCKING OPERATIONS

3.1.6.1 To support applications that may need to invoke several operations concurrently, the `invoke-ID` parameter is specified for all confirmed operations except CLTU-BIND and CLTU-UNBIND.

NOTES

1 The `invoke-ID` parameter allows the invoker to correlate a particular return to the invocation that prompted it.

2 Confirmed operations that include the `invoke-ID` parameter are non-blocking operations; those that do not are blocking operations. Unconfirmed operations are always non-blocking.

3.1.6.2 After invoking a blocking operation, the invoker shall not invoke another operation for the same service instance until the return from the blocking operation is received; except that, if the return from a blocking operation is not received in a timely manner, the invoker may invoke CLTU-PEER-ABORT to terminate the association.

3.1.6.3 After invoking a non-blocking operation, the invoker may invoke another operation without waiting for the return from the first invocation.

3.1.6.4 The value of the `invoke-ID` parameter shall be an invoker-supplied arbitrary integer value that shall be returned, unchanged, by the performer.

3.1.6.5 The invocation of a non-blocking operation shall be rejected with the `diagnostic` 'duplicate invoke id' if it includes an `invoke-ID` whose value is the same as that of another invocation that is awaiting confirmation within the context of the same service instance.

3.1.6.6 To ensure that the Forward CLTU service behaves in a predictable manner, the effects of operations shall be as though the operations were performed in the order that their invocations were received by the performer.

3.1.6.7 The invoker may choose not to exploit the non-blocking capability and always wait for the return from a non-blocking operation before invoking another operation.

Documents
Document Sharing Hub

© ISO 2021 – All rights reserved

Full document details: BS ISO 22671:2021

NOTE – An invoker wishing to operate in blocking mode, i.e., to invoke a new operation only after the return from the previous operation has been received, may use a constant value for the `invoke-ID` parameter. As long as a return is still outstanding, the performer will reject any further invocations.

3.1.6.8 Compliance with this Recommended Standard does not require the performer to process invocations concurrently; however, the performer must accept invocations from a non-blocking invoker and buffer and serialize them by local means not visible externally.

3.1.7 TIME

3.1.7.1 The time reference for all parameters containing a time value shall be based on Coordinated Universal Time (UTC).

3.1.7.2 The type of parameters containing a time value shall be the CCSDS Day Segmented (CDS) time code format (reference [5]) with an epoch of 1958-01-01 and a 16-bit day segment. Depending on the F-CLTU service provider capabilities and/or the supported mission requirements, the time tag may have either a resolution of microseconds or a resolution of picoseconds.

3.1.7.3 All time values shall be expressed to a precision of at least one-tenth (0.1) of a second.

3.1.7.4 All time value shall be accurate to within one-tenth (0.1) of a second or better.

3.1.8 DELIVERY MODES

3.1.8.1 Forward Online Delivery

3.1.8.1.1 Forward online delivery service provision shall occur at the same time as service production, i.e., during a space link session.

3.1.8.1.2 CLTUs supplied by the service user shall be buffered by the service provider until they are processed.

3.1.8.1.3 The buffer used by the service provider exists only during service provisioning.

3.1.8.1.4 The timing of CLTU processing shall be determined by the order of CLTUs in the buffer and any annotation data provided with the CLTUs.

NOTE – The forward online delivery mode is defined in this Recommended Standard.

Documents
Document Sharing Hub
© ISO 2021 – All rights reserved

Full document details: BS ISO 22671:2021

3.1.8.2 Forward Offline Delivery

The forward offline delivery mode is outside the scope of this version of this Recommended Standard.

3.1.9 SETTING OF PARAMETERS

3.1.9.1 A Forward CLTU provider shall permit setting of the service configuration parameters as specified in table 3-1.

3.1.9.2 The range or set of values a parameter may assume is constrained by specification of its data type (see annex A).

3.1.9.3 Service management may further constrain the allowed values for a given service instance.

Table 3-1: Setting of Forward CLTU Service Configuration Parameters

Parameter	Service Management	CLTU-START Operation	CLTU-SCHEDULE-STATUS-REPORT Operation	CLTU-THROW-EVENT Operation (NOTE 3)
acquisition-sequence-length	X			
bit-lock-required	X			
clcw-physical-channel	X			
clcw-global-VCID	X			
delivery-mode	X			
expected-cltu-identification		X		
expected-event-invocation-identification				X
maximum-cltu-length	X			
minimum-delay-time	X			
minimum-reporting-cycle	X			
modulation-frequency	X			
modulation-index	X			
notification-mode	X			
plop-1-idle-sequence-length	X			
plop-in-effect	X			
protocol-abort-mode	X			

© ISO 2021 – All rights reserved

Documents
Document Sharing Hub

Full document details: BS ISO 22671:2021

Parameter	Service Management	CLTU-START Operation	CLTU-SCHEDULE-STATUS-REPORT Operation	CLTU-THROW-EVENT Operation (NOTE 3)
reporting-cycle			X	
return-timeout-period	X			
rf-available-required	X			
service-instance-provision-period	X			
service-version-number	X			
subcarrier-to-bit-rate-ratio	X			

NOTES

1 Further details on protocol-abort-mode are discussed in 4.1.5. The notification-mode parameter is described in 3.7.2.3. Other parameters are presented and described in table 3-11. A complete list of parameters that may affect service production is to be found in the service management suite of documents (see 1.5.2).

2 The user can ascertain the current value of the parameters presented in table 3-11 by means of the CLTU-GET-PARAMETER operation.

3 The ability to modify selected service configuration parameters using the CLTU-THROW-EVENT operation is allowed but not mandated in this Recommended Standard.

3.1.10 PROVIDER BUFFERING REQUIREMENTS

3.1.10.1 The service package shall specify the amount of buffering the provider must maintain.

3.1.10.2 The amount of buffer space shall be specified in terms of the number of octets that can be stored.

3.1.10.3 The service provider shall buffer only complete CLTUs.

3.1.11 ACCOUNTING SUMMARY

Statistical information to be collected over a period of time shall always refer to the service instance provision period.

Documents
Document Sharing Hub
© ISO 2021 – All rights reserved

Full document details: BS ISO 22671:2021