BS ISO 22848:2021

BSI Standards Publication

Corrosion of metals and alloys — Test method for measuring the stress corrosion crack growth rate of steels and alloys under static-load conditions in high-temperature water

Documents
Document Sharing Hub

Full document details: BS ISO 22848:2021

National foreword

This British Standard is the UK implementation of ISO 22848:2021.

The UK participation in its preparation was entrusted to Technical Committee ISE/NFE/8, Corrosion of metals and alloys.

A list of organizations represented on this committee can be obtained on request to its committee manager.

This publication does not purport to include all the necessary provisions of a contract. Users are responsible for its correct application.

© The British Standards Institution 2021
Published by BSI Standards Limited 2021

ISBN 978 0 580 51813 3

ICS 77.060

Compliance with a British Standard cannot confer immunity from legal obligations.

This British Standard was published under the authority of the Standards Policy and Strategy Committee on 28 February 2021.

Amendments/corrigenda issued since publication

Date	Text affected

Documents
Document Sharing Hub

Full document details: BS ISO 22848:2021

INTERNATIONAL STANDARD

ISO 22848

First edition
2021-02

Corrosion of metals and alloys — Test method for measuring the stress corrosion crack growth rate of steels and alloys under static-load conditions in high-temperature water

Corrosion des métaux et des alliages — Méthode d'essai pour le mesurage de la vitesse de propagation des fissures de corrosion sous contrainte des aciers et des alliages dans des conditions de charge statique dans de l'eau à haute température

Reference number
ISO 22848:2021(E)

Documents
Document Sharing Hub

© ISO 2021

Full document details: BS ISO 22848:2021

COPYRIGHT PROTECTED DOCUMENT

© ISO 2021

All rights reserved. Unless otherwise specified, or required in the context of its implementation, no part of this publication may be reproduced or utilized otherwise in any form or by any means, electronic or mechanical, including photocopying, or posting on the internet or an intranet, without prior written permission. Permission can be requested from either ISO at the address below or ISO's member body in the country of the requester.

ISO copyright office
CP 401 • Ch. de Blandonnet 8
CH-1214 Vernier, Geneva
Phone: +41 22 749 01 11
Email: copyright@iso.org
Website: www.iso.org

Published in Switzerland

© ISO 2021 – All rights reserved

Documents
Document Sharing Hub

Full document details: BS ISO 22848:2021

Contents

Page

Foreword ..... **iv**

1 Scope **1**

2 Normative references **1**

3 Terms and definitions **1**

4 Principle of test **2**

5 Specimen **3**
5.1 Specimen orientation 3
5.2 Specimen geometry 3
5.3 Specimen finish 4
5.4 Specimen size requirement 4
5.5 Specimen dimensional measurement 5
5.6 Stress intensity factor, K_I 5

6 Test equipment **5**

7 Crack length measurement by potential drop method **6**

8 Corrosion potential measurement **7**
8.1 General 7
8.2 Measurement method 7

9 Test procedure **7**
9.1 General 7
9.2 Installation in autoclave 8
9.3 Adjustment of test environment 9
9.4 Loading 9
9.4.1 General 9
9.4.2 Fatigue pre-cracking 9
9.4.3 SCC transitioning 9
9.4.4 Static loading 11

10 Evaluation of test results **11**

11 Test report **14**

Annex A (informative) **CDCB specimen geometry and stress intensity factor calculation** **16**

Annex B (informative) **Equipment for SCC growth testing** **19**

Annex C (informative) **Water chemistry and monitoring items in simulated BWR and PWR environments** **22**

Annex D (informative) **Approach to determine crack growth rate** **24**

Bibliography **25**

© ISO 2021 – All rights reserved

Documents
Document Sharing Hub

Full document details: BS ISO 22848:2021

Foreword

ISO (the International Organization for Standardization) is a worldwide federation of national standards bodies (ISO member bodies). The work of preparing International Standards is normally carried out through ISO technical committees. Each member body interested in a subject for which a technical committee has been established has the right to be represented on that committee. International organizations, governmental and non-governmental, in liaison with ISO, also take part in the work. ISO collaborates closely with the International Electrotechnical Commission (IEC) on all matters of electrotechnical standardization.

The procedures used to develop this document and those intended for its further maintenance are described in the ISO/IEC Directives, Part 1. In particular, the different approval criteria needed for the different types of ISO documents should be noted. This document was drafted in accordance with the editorial rules of the ISO/IEC Directives, Part 2 (see www.iso.org/directives).

Attention is drawn to the possibility that some of the elements of this document may be the subject of patent rights. ISO shall not be held responsible for identifying any or all such patent rights. Details of any patent rights identified during the development of the document will be in the Introduction and/or on the ISO list of patent declarations received (see www.iso.org/patents).

Any trade name used in this document is information given for the convenience of users and does not constitute an endorsement.

For an explanation of the voluntary nature of standards, the meaning of ISO specific terms and expressions related to conformity assessment, as well as information about ISO's adherence to the World Trade Organization (WTO) principles in the Technical Barriers to Trade (TBT), see www.iso.org/iso/foreword.html.

This document was prepared by Technical Committee ISO/TC 156, *Corrosion of metals and alloys*.

Any feedback or questions on this document should be directed to the user's national standards body. A complete listing of these bodies can be found at www.iso.org/members.html.

© ISO 2021 – All rights reserved
Documents
Document Sharing Hub
Full document details: BS ISO 22848:2021

Corrosion of metals and alloys — Test method for measuring the stress corrosion crack growth rate of steels and alloys under static-load conditions in high-temperature water

1 Scope

This document specifies a test method for determining the stress corrosion crack (SCC) growth rate of steels and alloys under static-load conditions in high-temperature water, such as the simulated water environment of light water reactors. The crack length of the specimen is monitored by a potential drop method (PDM) during the test in an autoclave.

The test method is applicable to stainless steels, nickel base alloys, low alloy steels, carbon steels and other alloys.

2 Normative references

The following documents are referred to in the text in such a way that some or all of their content constitutes requirements of this document. For dated references, only the edition cited applies. For undated references, the latest edition of the referenced document (including any amendments) applies.

ISO 7539-6, *Corrosion of metals and alloys — Stress corrosion testing — Part 6: Preparation and use of precracked specimens for tests under constant load or constant displacement*

3 Terms and definitions

For the purposes of this document, the terms and definitions given in ISO 7539-6 and the following apply.

ISO and IEC maintain terminological databases for use in standardization at the following addresses:

— ISO Online browsing platform: available at https://www.iso.org/obp

— IEC Electropedia: available at http://www.electropedia.org/

3.1
potential drop method
PDM
non-destructive method for measuring a crack length based on the change in the electric potential as a crack propagates in the presence of an applied DC or AC current

3.2
stress corrosion crack transitioning
SCC transitioning
use of cyclic loading at low frequency and with increasing hold time at maximum load in the test environment to promote a transition in the fracture surface morphology from a transgranular (TG) fatigue pre-crack to SCC, typically intergranular (IG) or interdendritic (ID) morphology for austenitic alloys

3.3
crack-tip re-activation loading
use of loading cycles to re-activate the tip of crack when crack retardation is observed under a static loading

© ISO 2021 – All rights reserved

Documents
Document Sharing Hub
Full document details: BS ISO 22848:2021

3.4
initial crack length
a_0
<compact tension (CT) specimen> distance from the load line to the initial crack tip

Note 1 to entry: It can refer to the machined notch tip or the air fatigue pre-crack front in the specimen.

Note 2 to entry: For other fracture mechanics geometries, refer to ISO 7539-6. The crack length (a) is often expressed as a proportion of the distance from the load-line to the end of the specimen (W): a/W.

3.5
final crack length
a_f
distance from the load line to the final crack front at the end of the stress corrosion crack growth test, where the crack length is measured on the fracture surface of the specimen

3.6
flow stress at test temperature
σ_{flowT}
algebraic average of the yield stress (σ_{yT}) and the ultimate tensile strength (σ_{uT}) at the test temperature:

$$\sigma_{flowT} = \left(\sigma_{yT} + \sigma_{uT}\right)/2$$

3.7
crack engagement
specimen thickness B where the stress corrosion crack has advanced

Note 1 to entry: It is expressed as a percentage.

3.8
average crack extension
A_1
average crack extension across the specimen thickness using a crack growth area or many equally spaced measurements of crack length (equally divided method)

3.9
average crack extension in crack engagement area
A_2
average crack extension based on the fraction of the specimen thickness where the stress corrosion crack has occurred

3.10
minimum crack extension
A_{min}
minimum extension of the stress corrosion crack in the specimen

3.11
maximum crack extension
A_{max}
maximum extension of the stress corrosion crack in the specimen

4 Principle of test

Stress corrosion cracking is a phenomenon in which a crack grows in an environment when stress is applied to a susceptible material. Thus, stress corrosion cracking is affected by three general factors: the material, stress and environment. The SCC growth rate is affected by the stress intensity factor, K_I. The SCC growth rate, da/dt, is defined as the time derivative of the crack length. While there is often no clear distinction between static loading and some very slowly increasing monotonically or cyclic loading, the primary interest in most SCC growth testing is the behaviour under static loading. By

© ISO 2021 – All rights reserved
AVA Documents Document Sharing Hub
Full document details: BS ISO 22848:2021

applying a static load to a specimen with a crack at a known K_I and continuously measuring the crack length (a) using the PDM, the crack growth rate (da/dt) can be continuously obtained. Often the best insight into the effects of environment and temperature are obtained by making periodic changes while continuously measuring the SCC growth response.

This document specifies the preparation of specimens, the control of the testing environment, the method of transitioning from fatigue crack to SCC, and the determination of the growth rate of a crack using fracture mechanics specimens in high-temperature water environments, with an emphasis on light water reactors.

Although the minimum requirements and basic procedures of SCC growth rate testing in high-temperature water are summarized in this document, it should be noted that there are complex inter-dependencies of many influential parameters on stress corrosion cracking phenomena, and subtle variations in test conditions can have a major impact on the reproducibility and credibility of the data. Extensive efforts to obtain high-quality SCC growth rate data have been undertaken over the last four decades and many key issues must be understood and implemented (see References [1] to [3]). For example, reliable SCC transitioning prior to static loading is an essential element, and specific procedures have been developed to help achieve well-behaved response.

5 Specimen

5.1 Specimen orientation

The specimen orientation in the test material is designed in accordance with ISO 7539-6.

The relative orientation of the crack plane and growth direction in the test material shall be specified in relation to the product form (such as plate rolling direction or pipe longitudinal direction) and, if applicable, also specified in relation to the weld direction and additional cold work (e.g. for rolling or forging). When the specimen is taken in or near a weld, the location of the crack plane of the specimen in relation to the weld fusion line shall be provided because a very pronounced effect on SCC behaviour is expected when the crack in the specimen propagates in the heat affected zone or weld metal of the test material, and the properties can vary from the weld root to the weld crown.

5.2 Specimen geometry

Many specimen geometries have been used for crack growth testing (see ISO 7539-6). The most common specimen is a compact tension (CT) specimen with a side-groove design, shown in Figure 1. The specimen thickness, B, is usually between $12{,}5 \times 10^{-3}$ m and $25{,}4 \times 10^{-3}$ m. Smaller or larger specimens are sometimes used but shall be justified from K-size criteria (see 5.4). The specimen width, W, is typically two times the specimen thickness (B).

Side grooves on both sides of the specimen are recommended to help maintain in-plane crack growth, but are not obligatory. The depth of each side groove is typically 5 % of B, and they are typically hemispherical.

The more complex contoured double cantilever beam (CDCB) specimen is also used because the stress intensity factor is practically considered constant over a certain range of crack lengths under constant-load conditions. However, note that the criteria for a CT specimen given in 5.4 is not applicable to a CDCB specimen. Details for a CDCB specimen are given in Annex A.

© ISO 2021 – All rights reserved

Documents
Document Sharing Hub
Full document details: BS ISO 22848:2021

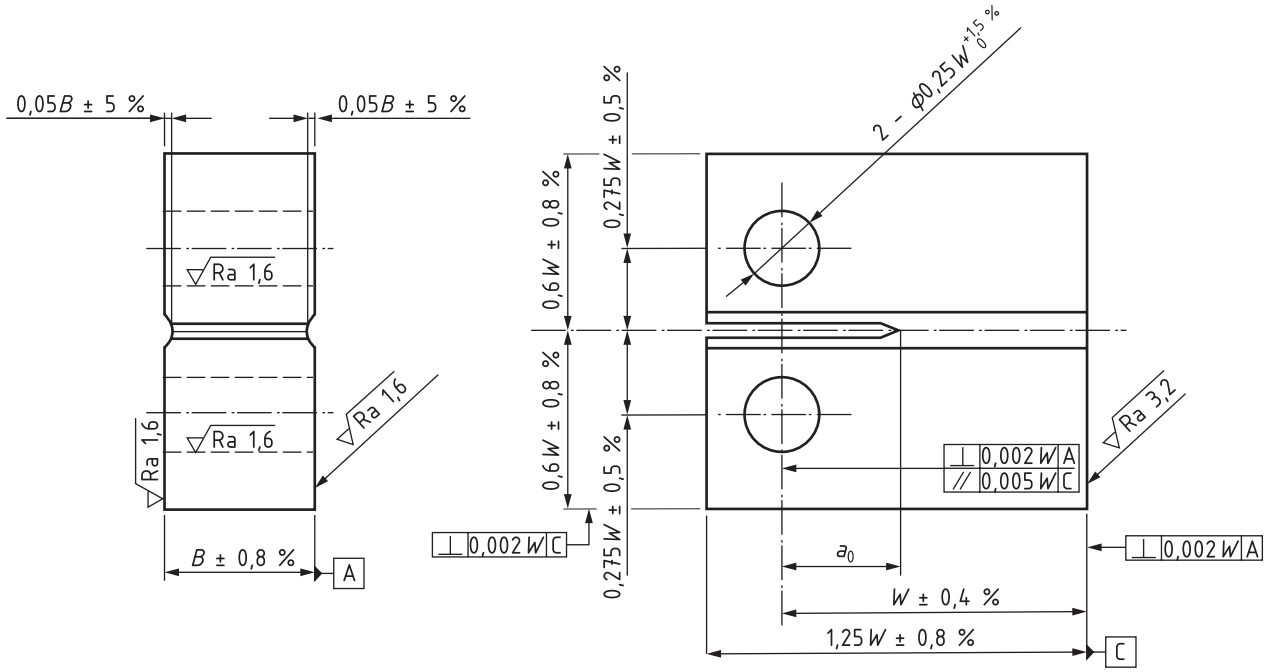

Figure 1 — Typical dimensions and tolerances of a CT specimen

5.3 Specimen finish

The surface of the specimen is mechanically finished to remove the working layers and residual stresses, and the recommended surface roughness is given in Figure 1. Surface condition generally has the largest effect on the corrosion potential, which in turn can affect SCC growth rates.

5.4 Specimen size requirement

Specimen size shall be chosen based on the mechanical properties of the test material and K_I value used in testing. There is no well-established K-size criterion for SCC growth testing, but the following formula is commonly used and considered conservative (except for low work-hardening materials, such as highly cold worked or irradiated materials). When load is applied to a sharp crack, some plasticity occurs, and linear elastic fracture mechanics (LEFM) requires that the plasticity (e.g. plastic zone size) be limited to small scale yielding. Different values of β are specified in various standards, for example, based on the magnitude of cyclic loading, which produces a smaller, fatigue hardened plastic zone. There are some studies on specimen size effects in SCC testing, including irradiated materials. Some publications are helpful for determining specimen size (see References [4] to [7]).

$$B_e\,,\ W-a > \beta\left(K_I\ /\ \sigma_{yT}\right)^2 \tag{1}$$

where

B_e is the effective thickness of the specimen, $(B{\cdot}B_N)^{1/2}$, where B_N is the specimen thickness at the base of the side grooves; if no side grooves are used, $B_e = B$ (in m);

W is the specimen width (in m);

a is the crack length (in m);

© ISO 2021 – All rights reserved
Documents
Document Sharing Hub
Full document details: BS ISO 22848:2021