BS ISO 22899-3:2025

BSI Standards Publication

Determination of the resistance to jet fires of passive fire protection materials

Part 3: Extended test requirements

Documents
Document Sharing Hub

Full document details: BS ISO 22899-3:2025

National foreword

This British Standard is the UK implementation of ISO 22899-3:2025.

The UK participation in its preparation was entrusted to Technical Committee FSH/22/-/14, High Intensity Fires.

A list of organizations represented on this committee can be obtained on request to its committee manager.

Contractual and legal considerations

This publication has been prepared in good faith, however no representation, warranty, assurance or undertaking (express or implied) is or will be made, and no responsibility or liability is or will be accepted by BSI in relation to the adequacy, accuracy, completeness or reasonableness of this publication. All and any such responsibility and liability is expressly disclaimed to the full extent permitted by the law.

This publication is provided as is, and is to be used at the recipient's own risk.

The recipient is advised to consider seeking professional guidance with respect to its use of this publication.

This publication is not intended to constitute a contract. Users are responsible for its correct application.

© The British Standards Institution 2025
Published by BSI Standards Limited 2025

ISBN 978 0 539 23749 8

ICS 13.220.50

Compliance with a British Standard cannot confer immunity from legal obligations.

This British Standard was published under the authority of the Standards Policy and Strategy Committee on 31 January 2025.

Amendments/corrigenda issued since publication

Date	Text affected

Documents
Document Sharing Hub

Full document details: BS ISO 22899-3:2025

International Standard

ISO 22899-3

First edition
2025-01

Determination of the resistance to jet fires of passive fire protection materials —

Part 3:
Extended test requirements

Reference number
ISO 22899-3:2025(en)

© ISO 2025

Documents
Document Sharing Hub

Full document details: BS ISO 22899-3:2025

COPYRIGHT PROTECTED DOCUMENT

© ISO 2025

All rights reserved. Unless otherwise specified, or required in the context of its implementation, no part of this publication may be reproduced or utilized otherwise in any form or by any means, electronic or mechanical, including photocopying, or posting on the internet or an intranet, without prior written permission. Permission can be requested from either ISO at the address below or ISO's member body in the country of the requester.

ISO copyright office
CP 401 • Ch. de Blandonnet 8
CH-1214 Vernier, Geneva
Phone: +41 22 749 01 11
Email: copyright@iso.org
Website: www.iso.org

Published in Switzerland

Documents
Document Sharing Hub
Full document details: BS ISO 22899-3:2025

Contents

Page

Foreword ... **v**
Introduction ... **vi**
1 Scope ... **1**
2 Normative references ... **1**
3 Terms and definitions ... **1**
4 Principle ... **4**
5 Test configurations ... **4**
5.1 General ... 4
5.2 Configuration incorporating the test specimen in the rear wall of the flame compartment ... 5
5.3 Configuration incorporating the test specimen in the approximate centre of the flame compartment ... 6
6 Construction of the test items and substrates ... **6**
6.1 General ... 6
6.2 Flame compartment ... 6
6.3 Nozzle ... 6
6.4 Panel test specimens (configuration incorporating specimen in the rear wall of the flame compartment) ... 7
6.4.1 General requirements for all panel test specimens ... 7
6.4.2 General requirements for assemblies mounted on panels ... 9
6.4.3 Cable transit systems ... 10
6.4.4 Pipe penetration systems ... 11
6.5 Structural steelwork test specimens (configuration incorporating specimen in the rear wall of the flame compartment) ... 14
6.6 Tubular section test specimens (configuration incorporating specimen in the approximate centre of the flame compartment) ... 14
6.7 Critical process control equipment (CPCE) test specimens (configuration incorporating specimen in the approximate centre of the flame compartment) ... 14
7 Test apparatus and conditions ... **15**
7.1 Nozzle geometry and position ... 15
7.1.1 General ... 15
7.1.2 Nozzle and specimen position for specimens incorporated in the rear wall of the flame compartment ... 16
7.1.3 Nozzle and specimen position for specimens in the flame compartment ... 16
7.2 Fuel ... 16
7.3 Test environment ... 16
7.4 Test conditions ... 16
7.4.1 Rate of temperature rise ... 16
7.4.2 Minimum sustained temperatures ... 17
7.4.3 Added air ... 17
7.5 Fire control thermocouples (FTCs) ... 17
7.5.1 Design and construction — wire thermocouples ... 17
7.5.2 Design and construction — cube thermocouples ... 17
7.5.3 Location ... 17
8 Specimen instrumentation ... **19**
8.1 General ... 19
8.2 Panel test specimens ... 19
8.3 Structural steelwork test specimens ... 20
8.4 Tubular section test specimens ... 20
8.5 Penetration sealing systems and assemblies mounted on a panel ... 20
8.5.1 General ... 20
8.5.2 Panel mounted cable transit systems ... 21

© ISO 2025 – All rights reserved

Documents
Document Sharing Hub
Full document details: BS ISO 22899-3:2025

8.5.3 Panel mounted pipe penetration seals ... 22
8.6 Critical process control equipment and assemblies mounted on tubular specimens ... 24

9 Passive fire protection systems and materials ... 25
9.1 General ... 25
9.2 Thickness measurement and control ... 25
9.3 Density ... 26
9.4 Conditioning ... 26

10 Test procedure ... 26

11 Repeatability and reproducibility ... 27

12 Uncertainty of measurement ... 27

13 Test report ... 27

14 Practical application of test results ... 29
14.1 General ... 29
14.2 Performance criteria ... 29
14.2.1 General ... 29
14.2.2 Coatings and spray-applied materials ... 29
14.2.3 Systems and assemblies ... 30
14.3 Factors affecting the validity of the test ... 30
14.3.1 General ... 30
14.3.2 Interruption of the jet fire ... 30
14.3.3 Failure to comply with temperature requirements ... 31
14.3.4 Failure of specimen thermocouples ... 31
14.3.5 Failure of fire control thermocouples ... 31
14.3.6 Failure of the re-circulation chamber connection ... 31
14.3.7 Failure of the fire compartment ... 31
14.3.8 Failure of operability of test specimens ... 32

Annex A (informative) **Example test report ... 33**

Annex B (informative) **Guide to classification procedures ... 36**

Bibliography ... 38

© ISO 2025 – All rights reserved

Documents
Document Sharing Hub
Full document details: BS ISO 22899-3:2025

Foreword

ISO (the International Organization for Standardization) is a worldwide federation of national standards bodies (ISO member bodies). The work of preparing International Standards is normally carried out through ISO technical committees. Each member body interested in a subject for which a technical committee has been established has the right to be represented on that committee. International organizations, governmental and non-governmental, in liaison with ISO, also take part in the work. ISO collaborates closely with the International Electrotechnical Commission (IEC) on all matters of electrotechnical standardization.

The procedures used to develop this document and those intended for its further maintenance are described in the ISO/IEC Directives, Part 1. In particular, the different approval criteria needed for the different types of ISO document should be noted. This document was drafted in accordance with the editorial rules of the ISO/IEC Directives, Part 2 (see www.iso.org/directives).

ISO draws attention to the possibility that the implementation of this document may involve the use of (a) patent(s). ISO takes no position concerning the evidence, validity or applicability of any claimed patent rights in respect thereof. As of the date of publication of this document, ISO had not received notice of (a) patent(s) which may be required to implement this document. However, implementers are cautioned that this may not represent the latest information, which may be obtained from the patent database available at www.iso.org/patents. ISO shall not be held responsible for identifying any or all such patent rights.

Any trade name used in this document is information given for the convenience of users and does not constitute an endorsement.

For an explanation of the voluntary nature of standards, the meaning of ISO specific terms and expressions related to conformity assessment, as well as information about ISO's adherence to the World Trade Organization (WTO) principles in the Technical Barriers to Trade (TBT), see www.iso.org/iso/foreword.html.

This document was prepared by Technical Committee ISO/TC 92, *Fire safety*, Subcommittee SC 2, *Fire Resistance*.

A list of all parts in the ISO 22899 series can be found on the ISO website.

Any feedback or questions on this document should be directed to the user's national standards body. A complete listing of these bodies can be found at www.iso.org/members.html.

© ISO 2025 – All rights reserved

Documents
Document Sharing Hub
Full document details: BS ISO 22899-3:2025

Introduction

The tests and procedures described in ISO 22899-1 are designed to give an indication of how passive fire protection materials and systems will perform in a jet fire. This document provides extended test procedures to meet three objectives:

1) to permit testing of critical process control equipment;

2) to permit an increase in the size and configurations of specimen that can be tested; and

3) to give an indication of how passive fire protection materials and systems will perform in a severe jet fire associated with significant confinement or other severe release scenarios that can generate sustained heat fluxes of 350 kW/m^2.

Guidance on the applicability of the test is covered in Reference [9].

Even with the extended test procedures herein, the dimensions of the test specimen can be smaller than typical items of structure and plant and the release of gas can be substantially less than that which might occur in a credible event. However, individual thermal and mechanical loads imparted to the passive fire protection material from the jet fire defined in this document have been shown by simulation to be similar to those imparted by a wide range of large-scale jet fires resulting from high-pressure releases of a range of fuels.

Although the method specified has been designed to simulate some of the conditions that occur in an actual jet fire, it cannot reproduce them all exactly and the thermal and mechanical loads do not necessarily coincide. The results of this test do not guarantee safety but may be used as elements of a fire risk assessment for structures or plants. Such a fire risk assessment should also take into account all the other factors that are pertinent to an assessment of the fire hazard for a particular end use. The test described in this document is not intended to replace the hydrocarbon fire resistance test (EN 1363-2[2]) or the test described in ISO 22899-1. Rather, it is a complementary test.

© ISO 2025 – All rights reserved

Documents
Document Sharing Hub
Full document details: BS ISO 22899-3:2025

Determination of the resistance to jet fires of passive fire protection materials —

Part 3: Extended test requirements

1 Scope

This document describes an extended test method determining the resistance to jet fires of passive fire protection (PFP) materials and systems or critical process control equipment. It gives an indication of how PFP material or equipment behaves in a severe jet fire and provides performance data under the specified conditions.

It does not include an assessment of other properties of the passive fire protection material such as weathering, ageing, shock resistance, impact or explosion resistance, or smoke production.

This document is intended to be complementary to ISO 22899-1. It is intended for use in situations when the required fire conditions or limitations on test specimen size or type preclude application of ISO 22899-1.

2 Normative references

The following documents are referred to in the text in such a way that some or all of their content constitutes requirements of this document. For dated references, only the edition cited applies. For undated references, the latest edition of the referenced document (including any amendments) applies.

ISO 834-1:1999, *Fire-resistance tests — Elements of building construction — Part 1: General requirements*

ISO 13702, *Oil and gas industries — Control and mitigation of fires and explosions on offshore production installations — Requirements and guidelines*

ISO 22899-1:2021, *Determination of the resistance to jet fires of passive fire protection materials — Part 1: General requirements*

3 Terms and definitions

For the purposes of this document, the following terms and definitions apply.

ISO and IEC maintain terminology databases for use in standardization at the following addresses:

— ISO Online browsing platform: available at https://www.iso.org/obp

— IEC Electropedia: available at https://www.electropedia.org/

3.1
assembly
unit or structure composed of a combination of materials or products, or both

© ISO 2025 – All rights reserved

Documents
Document Sharing Hub
Full document details: BS ISO 22899-3:2025

3.2
critical process control equipment
CPCE
industrial equipment that performs a safety-critical function by actively changing a hydrocarbon processing routine

Note 1 to entry: This can include valves, actuators, sensors, control panels, transducers, junction boxes, etc.

3.3
critical temperature
maximum temperature that the equipment, assembly or structure to be protected is allowed to reach

3.4
ΔT_{max}
maximum temperature rise recorded by any of the installed thermocouples

3.5
fire barrier
separating element that resists the passage of flame, heat effluents, or a combination of these, for a period of time under specified conditions

3.6
fire resistance
ability of an item to fulfil, for a stated period of time, the required stability, integrity or thermal insulation, or a combination of these three criteria, along with another expected duty if applicable (such as a restriction from reaching the critical temperature) specified in a standard fire-resistance test

3.7
fire test
procedure designed to measure or assess the performance of a material, product, structure or system to one or more aspects of fire

3.8
flame compartment
chamber constructed around the nozzle to contain the test specimen, increasing the size of the fireball and increasing heat fluxes

3.9
flame re-circulation chamber
mild steel box, open at the front, and as defined in ISO 22899-1, into which the jet fire is directed giving a re-circulating flame resulting in a fireball

Note 1 to entry: Materials other than mild steel may be used when appropriate.

3.10
integrity
ability of a separating element, when exposed to fire on one side, to prevent the passage of flames and hot gases or the occurrence of flames on the unexposed side, for a stated period of time in a standard fire resistance test

3.11
intermediate-scale test
test performed on an item of medium dimensions

Note 1 to entry: A test performed on an item of which the maximum dimension is between 1 m and 3 m is usually called “an intermediate-scale test”. This document describes an intermediate-scale jet fire test.

3.12
jet fire
ignited discharge of propane vapour under pressure

© ISO 2025 – All rights reserved

Documents
Document Sharing Hub
Full document details: BS ISO 22899-3:2025

3.13
jet nozzle
assembly from which the flammable material issues

3.14
outside specimen diameter
specimen diameter measured to the outer surface of the passive fire protection system on a tubular specimen

3.15
operability
ability of an item of process control equipment to perform its required function

Note 1 to entry: The required function can be either a change in state (opening or closing) or the activation of a change in state.

3.16
passive fire protection
PFP
coating or cladding arrangement or free-standing system which, in the event of fire, will provide thermal protection to restrict the rate at which heat is transmitted to the object or area being protected

Note 1 to entry: The term "passive" is used to distinguish the systems tested, including those systems that react chemically (e.g. intumescents), from active systems such as water deluge.

3.17
passive fire protection material
PFP material
PFP system
material or system, such as a coating, cladding removable jacket or inspection panel, cable transit system, pipe penetration seal or other such system that, in the event of a fire, will provide thermal protection to restrict the rate at which heat is transmitted to the object or area being protected

3.18
penetration seal
seal used to maintain the fire resistance of a separating element at the position where there is provision for services to pass through the separating element

3.19
protective chamber
mild steel box, open at the front and back, which is designed to be attached to the rear of the flame re-circulation chamber to shield the rear of the flame re-circulation chamber from environmental influences

Note 1 to entry: A protective chamber is not required for tubular section tests but may be used to provide additional stability to the flame re-circulation chamber, if used.

3.20
temperature rise
rise in measured temperature above the initial temperature at a given location

3.21
coaming
raised border around a penetration

3.22
transit sealing system
cable transit consisting of a metal frame, box or coaming, penetration seal or material and cables

Note 1 to entry: It may be uninsulated, partially insulated or fully insulated.

© ISO 2025 – All rights reserved

Documents
Document Sharing Hub
Full document details: BS ISO 22899-3:2025

4 Principle

The method provides an indication of how PFP materials or systems or critical process control equipment performs in a severe jet fire that can occur, for example, in petrochemical installations. It aims to simulate the thermal and mechanical loads imparted to passive fire protection material by large-scale jet fires resulting from high-pressure releases of flammable gas, pressure liquefied gas or flashing liquid fuels through use of an intermediate-scale test. Jet fires give rise to high convective and radiative heat fluxes as well as high erosive forces. To generate both types of heat flux in sufficient quantity, a 0,3 kg s^{-1} sonic release of gas is aimed into a partially enclosed compartment, producing an extended fireball. The heat flux to the specimen is increased beyond that of ISO 22899-1 due to an increase in the flame thickness and radiation from the flame compartment. Propane is used as the fuel since it has a greater propensity to form soot than natural gas and can therefore produce a flame of higher luminosity. The high erosive forces generated by the release of the sonic velocity gas jet 1 m from the specimen surface are equivalent to those produced in ISO 22899-1.

5 Test configurations

5.1 General

There are two basic configurations under which the test can be operated:

a) a configuration where the rear wall of the flame compartment incorporates the test specimen;

b) a configuration where the test specimen is installed on supports inside the approximate centre of the flame compartment.

These two alternative configurations are shown in Figures 1 and 2.

Dimensions in millimetres

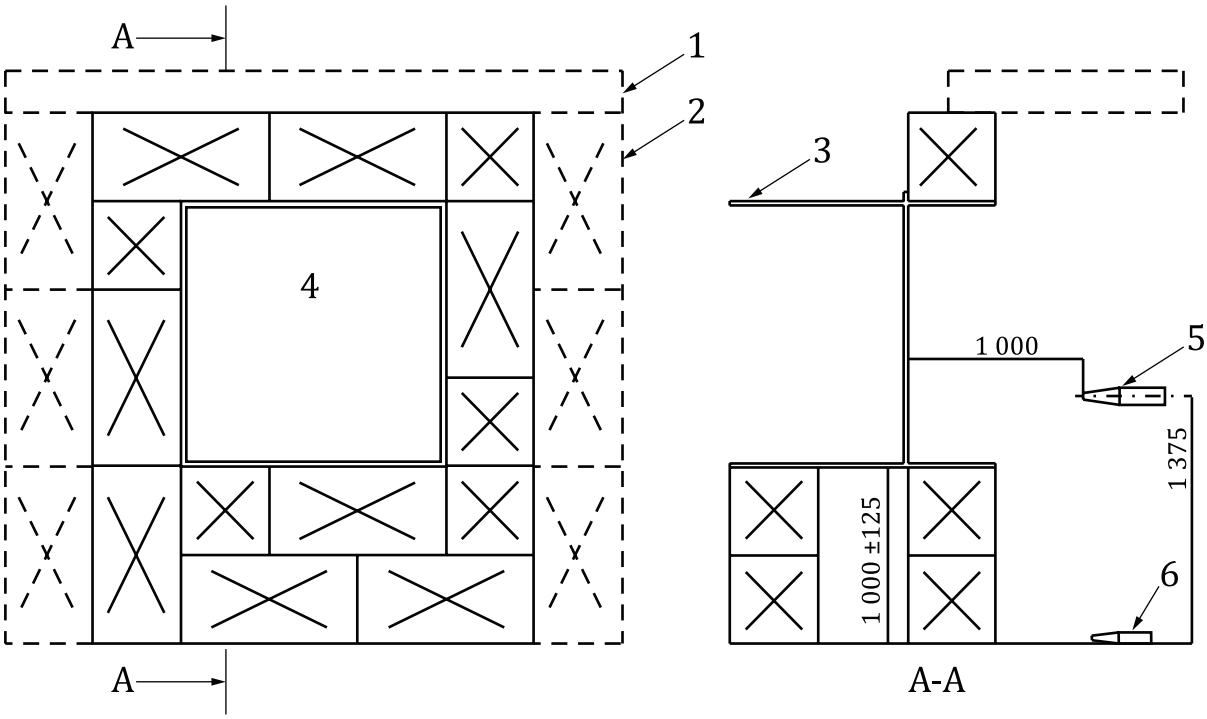

Key

1 roof blocks

2 aerated concrete blocks for rear wall and side walls (not shown)

3 protective chamber

© ISO 2025 – All rights reserved

Documents
Document Sharing Hub
Full document details: BS ISO 22899-3:2025

4 test specimen, consisting of a structural box, a panel incorporated within the rear wall, or consisting of an entire construction instead of the rear wall.

5 jet nozzle

6 optional air inlets

Figure 1 — Layout for configuration incorporating the test specimen in a wall of the flame compartment

Dimensions in millimetres

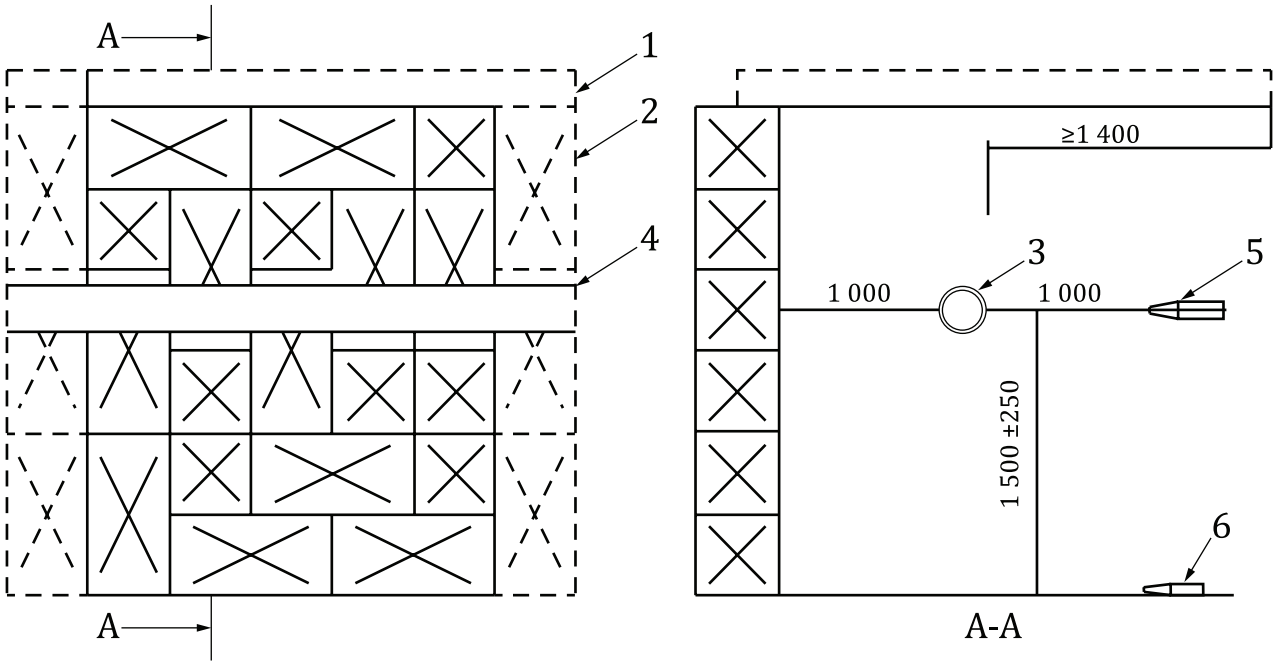

Key

1 roof blocks

2 aerated concrete blocks for rear wall and side walls (not shown)

3 test specimen

4 test specimen mounted within the wall or on end supports

5 jet nozzle

6 optional air inlets

Figure 2 — Layout for configuration incorporating the test specimen in the approximate centre of the flame compartment

5.2 Configuration incorporating the test specimen in the rear wall of the flame compartment

The rear wall test configuration is used for determining the jet fire resistance of:

a) protection systems for plane surfaces;

b) protection systems for structural steelwork with an open profile;

c) fire barriers;

d) penetration and transit sealing systems used in conjunction with fire barriers.

© ISO 2025 – All rights reserved

Documents
Document Sharing Hub
Full document details: BS ISO 22899-3:2025

5.3 Configuration incorporating the test specimen in the approximate centre of the flame compartment

The central test configuration is used for determining the jet fire resistance of:

a) critical process control equipment not used in conjunction with fire barriers;

b) protection systems for structural steelwork with a closed (hollow) profile;

c) PFP systems and assemblies mounted on structural sections with a closed (hollow) profile.

6 Construction of the test items and substrates

6.1 General

The key items required for the test are the jet release nozzle, the test specimen (which can, but does not necessarily, include a flame re-circulation chamber and a protective chamber) and the flame compartment. These items are required for all configurations of the test. In the configuration of the test where the test specimen is in the approximate centre of the fire compartment, the flame re-circulation chamber and protective chamber is not used.

6.2 Flame compartment

The flame compartment shall be constructed of a rear wall, 2 sides walls and a roof. Walls shall be constructed from aerated concrete blocks, or other suitable insulative material, and shall be parallel or perpendicular to each other. The width of the flame compartment shall be 2 500 mm to 3 000 mm, measured across the width of the opening. The depth of the flame compartment shall be greater than or equal to 2 500 mm, measured from the opening to the rear wall. The height of the flame compartment shall be 3 000 mm to 4 000 mm, measured from the floor to the roof.

The roof shall extend from the test specimen to the opening for a minimum distance of 1 400 mm, with the exact distance determined by the requirement to meet the temperature requirements during the test described in 7.4.

The flame compartment may be insulated (in whole or in part) with a fire-resistant board or blanket to ensure rapid temperature rise at the start of the test and to reduce the dependency of the test on wall construction. Retention of the insulation shall be designed to ensure the insulation remains in place for a minimum of 30 minutes, and failure or detachment of the insulation thereafter shall not happen in a manner that impedes heating of the test specimen.

NOTE Failure of any side wall insulation after the temperature requirements in 7.4.1 can affect the validity of the test, as described in 14.3.7.

The flame compartment may be equipped with two air inlets, positioned on the floor symmetrically on either side of the nozzle. Air may be blown into the fire compartment during the test if required to reach the conditions stated in 7.4.

The flame compartment may have a front wall up to the mid-height of the compartment and a vent (or vents), to help achieve the test condition requirements in 7.4.

Test specimens that extend beyond the flame compartment wall or are mounted within the flame compartment wall shall have any openings sealed to prevent loss of hot gases from the flame compartment at the edges of specimens.

6.3 Nozzle

The fuel shall be released towards the specimen from a nozzle as defined in ISO 22899-1:2021, 6.3. The tapered, converging nozzle shall be of length 200 mm ± 1 mm, inlet diameter 52 mm ± 0,5 mm and outlet diameter 17,8 mm ± 0,2 mm. Figure 3 shows the details of construction. The nozzle shall be constructed of heat resistant stainless steel. Provisions may be made for fitting a sighting device.

© ISO 2025 – All rights reserved

Documents
Document Sharing Hub
Full document details: BS ISO 22899-3:2025

The nozzle shall be a minimum of 1 000 mm above the floor of the fire compartment. The nozzle and, if necessary, the connecting fuel line shall be protected such that the position of the nozzle does not change throughout the test by more than 50 mm.

Dimensions in millimetres

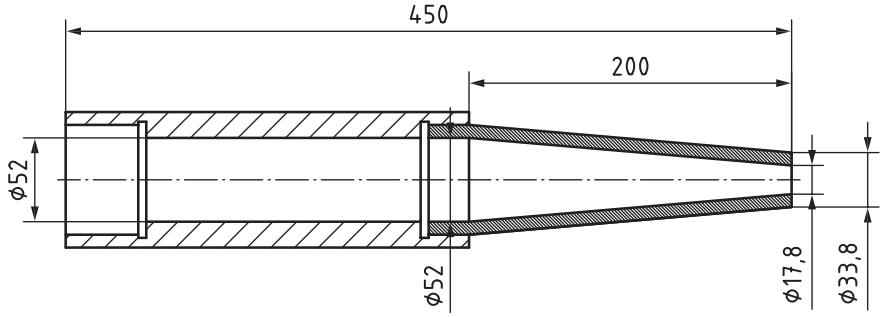

Figure 3 — Nozzle

6.4 Panel test specimens (configuration incorporating specimen in the rear wall of the flame compartment)

6.4.1 General requirements for all panel test specimens

The panel test specimen shall consist of a panel mounted within a rigid frame to permit connection to the adjacent flame compartment chamber wall. The test specimen may form part or all of the rear wall of the fire compartment. The connection between the panel and the frame or adjacent fire compartment wall shall be gas tight. The method of mounting depends on the type of passive fire protection as described in 9.1.

The panel specimen shall be used for cases that simulate fire barriers, steelwork with no corners or edge features, cylindrical or spherical vessels, pipes and tubular sections of outside diameter greater than 500 mm. The panel shall have minimum dimensions of 1 620 mm × 1 620 mm and shall be constructed from 10 mm thick steel or designed to replicate the material and thickness of the item being simulated.

Specimens with dimensions 1 620 mm × 1 620 mm may use a flame recirculation chamber as described in ISO 22899-1:2021, 6.4 and shall use a protective chamber based on that in ISO 22899-1:2021, 6.5.

Specimens of size greater than that specified in ISO 22899-1:2021, 6.4 may be protected from environmental effects on the non-fire side using other means, as determined by the test laboratory in accordance with the test sponsor.

NOTE It is recognized that the protective chamber described in ISO 22899-1:2021, 6.5 is not practical for specimens significantly larger than those described in ISO 22899-1:2021, 6.4. Therefore, other methods are permitted to protect the non-fire side of such specimens.

When the passive fire protection material is in the form of a panel, the panel shall be fixed to act as part of the rear wall of the flame compartment. Specimens that use a flame recirculation chamber as described in ISO 22899-1:2021, 6.4 shall be fixed so that the front of the recirculation chamber is flush with the rear wall of the flame compartment.

The method of mounting shown in Figure 4 depends on the type of passive fire protection and is detailed as follows.

a) For a rigid stand-alone panel, at least one joint shall be included in the panel and this shall be positioned vertically, offset from the centre by 250 mm ± 50 mm. If the joint is not symmetrically resistant to a jet fire flowing across the front of the rear wall of the flame re-circulation chamber (e.g. a lap joint) the joint shall be oriented to give the most severe exposure to the jet fire as shown in Figure 12. The rigid panel may extend to the full dimensions of the substrate as discussed in 6.5.

b) If the panel profile is not planar (e.g. trapezoidal), it can be necessary to incorporate a rigid surround around the panel to achieve a gas tight connection.

© ISO 2025 – All rights reserved

Documents
Document Sharing Hub
Full document details: BS ISO 22899-3:2025