BS ISO 22901-3:2018

BSI Standards Publication

Road vehicles — Open diagnostic data exchange (ODX)

Part 3: Fault symptom exchange description (FXD)

Documents
Document Sharing Hub

Full document details: BS ISO 22901-3:2018

National foreword

This British Standard is the UK implementation of ISO 22901-3:2018.

The UK participation in its preparation was entrusted to Technical Committee AUE/16, Data Communication (Road Vehicles).

A list of organizations represented on this committee can be obtained on request to its secretary.

This publication does not purport to include all the necessary provisions of a contract. Users are responsible for its correct application.

© The British Standards Institution 2018
Published by BSI Standards Limited 2018

ISBN 978 0 580 81925 4

ICS 43.180

Compliance with a British Standard cannot confer immunity from legal obligations.

This British Standard was published under the authority of the Standards Policy and Strategy Committee on 31 March 2018.

Amendments/corrigenda issued since publication

Date	Text affected

Documents
Document Sharing Hub

Full document details: BS ISO 22901-3:2018

INTERNATIONAL STANDARD

ISO 22901-3

First edition
2018-02

Road vehicles — Open diagnostic data exchange (ODX) —

Part 3: Fault symptom exchange description (FXD)

Véhicules routiers — Diagnostic généralisé, échange de données (ODX) —

Partie 3: Format d'échange de système de défaut (FXD)

Reference number
ISO 22901-3:2018(E)

Documents
Document Sharing Hub
© ISO 2018

Full document details: BS ISO 22901-3:2018

COPYRIGHT PROTECTED DOCUMENT

© ISO 2018

All rights reserved. Unless otherwise specified, or required in the context of its implementation, no part of this publication may be reproduced or utilized otherwise in any form or by any means, electronic or mechanical, including photocopying, or posting on the internet or an intranet, without prior written permission. Permission can be requested from either ISO at the address below or ISO's member body in the country of the requester.

ISO copyright office
CP 401 • Ch. de Blandonnet 8
CH-1214 Vernier, Geneva, Switzerland
Tel. +41 22 749 01 11
Fax +41 22 749 09 47
copyright@iso.org
www.iso.org

Published in Switzerland

© ISO 2018 – All rights reserved

Documents
Document Sharing Hub

Full document details: BS ISO 22901-3:2018

Contents

Page

Foreword ... **vi**
Introduction ... **vii**
1 Scope ... **1**
2 Normative references ... **1**
3 Terms and definitions ... **1**
4 Abbreviated terms ... **1**
5 Specification release version information ... **2**
5.1 Specification for FXD XML-Schema release version ... 2
6 FXD concept ... **2**
6.1 Overview ... 2
6.2 Traditional workflow ... 3
6.3 Raw information ... 3
6.3.1 General definition and background ... 3
6.3.2 Requirements ... 3
6.4 FXD format and example ... 4
6.5 Basic concept of FXD ... 5
6.5.1 Basic requirements ... 5
6.5.2 Formal description of diagnosis algorithms ... 5
6.5.3 Value inheritance mechanism to support use cases ... 6
6.6 FXD workflow ... 7
6.7 FXD workflow example ... 8
6.8 Constraints for schema updates ... 9
7 FXD use cases ... **10**
7.1 General ... 10
7.2 UC 1 Delivery of "raw information" by ECU software suppliers ... 10
7.3 UC 2 – Generation of documentation based on FXD raw information ... 11
7.3.1 UC 2.1 Generation of OBD summary sheet for vehicle type approval ... 11
7.3.2 UC 2.2 FXD-based repair and maintenance information ... 11
8 General properties of FXD elements ... **12**
8.1 Attributes ... 12
8.1.1 DESC-EXTENT (Content) ... 13
8.1.2 HREF (Content) ... 13
8.1.3 ID (Infrastructure) ... 13
8.1.4 ID-REF (Infrastructure) ... 14
8.1.5 OID (Content) ... 14
8.1.6 OPERATOR (Content) ... 15
8.1.7 SI (Content) ... 15
8.1.8 DESC-STATE (Content) ... 15
8.1.9 TI (Infrastructure) ... 16
8.1.10 VERSION (Content) ... 16
8.1.11 xml:base (Infrastructure) ... 16
8.1.12 xml:lang (Infrastructure) ... 16
8.1.13 xsi:nil (Content) ... 17
8.1.14 xsi:type (Infrastructure) ... 17
8.2 Variant coding ... 17
8.3 Generic selection lists ... 18
8.4 External document references ... 18
8.5 Referencing ECU variables and calibration labels ... 18
8.6 General FXD elements, used for identification and description ... 18
9 Description of FXD elements ... **19**
9.1 General ... 19

© ISO 2018 – All rights reserved

AVA Documents
Document Sharing Hub
Full document details: BS ISO 22901-3:2018

9.2 ADMIN-DATA ... 19
9.2.1 General ... 19
9.2.2 COMPANY-DATA-REF ... 19
9.2.3 ECU-FAMILY ... 19
9.2.4 PROJECT ... 19
9.2.5 RESOURCES ... 19
9.2.6 DOC-REVISIONS ... 19
9.3 COMPANY-DATAS ... 20
9.3.1 General ... 20
9.3.2 COMPANY-DATA ... 20
9.4 DATA-DICTIONARY ... 20
9.4.1 DATA-DECLARATIONS ... 20
9.4.2 COMPUTATIONS ... 21
9.4.3 UNIT-SPEC ... 22
9.5 VARIABLE-DESCRIPTIONS ... 22
9.5.1 General ... 22
9.5.2 Element-Id ... 23
9.5.3 COMPANY-DATA-REF ... 23
9.5.4 ECU-FUNCS ... 23
9.5.5 CONFIGURATION ... 23
9.5.6 DATA-DECLARATION described by a VARIABLE-DESCRIPTION ... 23
9.5.7 SIMPLE-VARIABLE ... 23
9.5.8 BIT-FIELD-VARIABLE ... 23
9.5.9 STATE-GRAPH ... 24
9.6 FAULT-SYMPTOMS ... 24
9.6.1 General ... 24
9.6.2 Element-Id ... 24
9.6.3 COMPANY-DATA-REF ... 25
9.6.4 ECU-FUNCS ... 25
9.6.5 CONFIGURATION ... 25
9.6.6 FAULT-IDENTIFICATION ... 25
9.6.7 MON-COMPONENT or system ... 26
9.6.8 FAULT-CLASSIFICATION ... 26
9.6.9 RATIO-GROUPS for in-use monitor performance ratio (IUMPR) ... 27
9.6.10 READINESS-GROUP ... 28
9.6.11 FAULT-DETECTIONS ... 28
9.6.12 CENTRAL-CALIBRATION-INFOS ... 38
9.6.13 INHIBITIONS information ... 39
9.6.14 SUBSTITUTION-FUNCTION ... 41
9.6.15 PROTECTIVE-FUNCTION ... 41
9.6.16 SIMULATION-METHOD ... 41
9.6.17 ##other-Information (for symptoms) ... 42
9.7 FAULT-SYMPTOM-3RD-PARTYS ... 43
9.8 SERVICE-06-IDS ... 43
9.9 FIDS ... 44
9.9.1 General ... 44
9.9.2 Element-Id ... 45
9.9.3 FID-TYPE ... 45
9.9.4 ECU-FUNC ... 45
9.9.5 FAULT-SYMPTOM-REFS ... 45
9.9.6 AUXILIARY-OBJECT-REFS ... 45
9.9.7 EXPLANATION ... 45
9.10 AUXILIARY-OBJECTS ... 46
9.11 MASKS ... 46
9.12 TEXT-MAPPINGS ... 46
9.13 Any Other-Information (for container) ... 46

Annex A (normative) **Digital Annex of FXD XML-Schema** ... **47**

Documents
Document Sharing Hub

© ISO 2018 – All rights reserved

Full document details: BS ISO 22901-3:2018

Annex B (normative) **Digital Annex of FXD Selection Dictionary** **76**
Annex C (normative) **Digital Annex of FXD Rule Set** **151**
Annex D (informative) **Inhibition of fault symptoms** **194**
Bibliography **198**

© ISO 2018 – All rights reserved

Documents
Document Sharing Hub
Full document details: BS ISO 22901-3:2018

Foreword

ISO (the International Organization for Standardization) is a worldwide federation of national standards bodies (ISO member bodies). The work of preparing International Standards is normally carried out through ISO technical committees. Each member body interested in a subject for which a technical committee has been established has the right to be represented on that committee. International organizations, governmental and non-governmental, in liaison with ISO, also take part in the work. ISO collaborates closely with the International Electrotechnical Commission (IEC) on all matters of electrotechnical standardization.

The procedures used to develop this document and those intended for its further maintenance are described in the ISO/IEC Directives, Part 1. In particular the different approval criteria needed for the different types of ISO documents should be noted. This document was drafted in accordance with the editorial rules of the ISO/IEC Directives, Part 2 (see www.iso.org/directives).

Attention is drawn to the possibility that some of the elements of this document may be the subject of patent rights. ISO shall not be held responsible for identifying any or all such patent rights. Details of any patent rights identified during the development of the document will be in the Introduction and/or on the ISO list of patent declarations received (see www.iso.org/patents).

Any trade name used in this document is information given for the convenience of users and does not constitute an endorsement.

For an explanation on the voluntary nature of standards, the meaning of ISO specific terms and expressions related to conformity assessment, as well as information about ISO's adherence to the World Trade Organization (WTO) principles in the Technical Barriers to Trade (TBT) see the following URL: www.iso.org/iso/foreword.html

This document was prepared by Technical Committee ISO/TC 22, *Road vehicles*, Subcommittee SC 31, *Data communication*.

Annex A, B and C of this document are normative and Annex D is for information only.

A list of all the parts in the ISO 22901 series can be found on the ISO website.

© ISO 2018 – All rights reserved
Documents
Document Sharing Hub
Full document details: BS ISO 22901-3:2018

Introduction

0.1 Overview

This document has been established in order to define a new format called FXD (Fault symptom eXchange Description) which has been developed for provision of machine-readable descriptions of mainly fault symptom algorithms which are implemented as diagnostic software in an Electronic Control Unit (ECU).

The main business case is the data exchange from a function and software supplier to a vehicle manufacturer in a standardized format (FXD XML-Schema) in order to enable a tool based processing.

The software supplier will provide software related raw data, which have to be extended and refined by the vehicle manufacturer for different use cases. Based on the FXD content and associated calibration values, several end user documents can be generated such as the summary table for OBD documentation.

The expected main benefits of the FXD approach are an overall improved efficiency as well as an independency of system supplier and vehicle manufacturer-specific format handling.

FXD is an extension of ODX in order to support the documentation and fault symptom data exchange use cases for type approval and repair and maintenance information (RMI).

A normative annex will include the FXD XML-Schema which represents the data model for the digital exchange of the FXD data.

0.2 Motivation

The complexity of OBD monitoring systems is continuously evolving. Technological progress and regulatory updates drive the complexity of both engine systems themselves and the related OBD monitoring systems. For instance, the number of monitors and thereby also Diagnostic Trouble Codes (DTC) has considerably increased over time as shown here for a 6-cylinder gasoline application from calendar year 2000 up to 2012.

In addition to the pure number of monitors, also the OBD monitors themselves have become more and more sophisticated.

Figure 1 shows the evolving complexity of OBD systems.

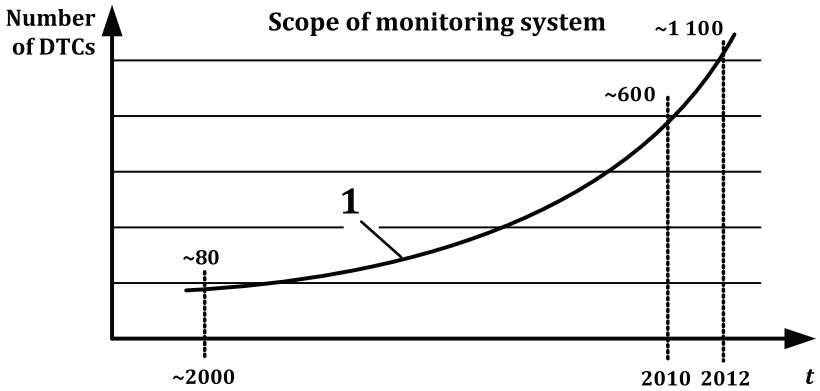

Key

1 6-cyl gasoline engine

Figure 1 — Evolving complexity of OBD systems

© ISO 2018 – All rights reserved

Documents
Document Sharing Hub
Full document details: BS ISO 22901-3:2018

0.3 Project complexity

Today's project complexity (e.g. variants) at the vehicle manufacturers is also an important aspect for diagnostic documentation. For all OBD-relevant monitoring strategies, the corresponding OBD documentation is generated. When these monitors are integrated by often different project teams, they may need to be specifically adapted and calibrated in order to operate properly in the different projects.

To ensure accurate OBD documentation across all projects, considerable efforts for synchronization and manual adjustment are necessary. Obviously, this specific approach will provide only a limited reuse potential.

Figure 2 shows the project complexity and accurate OBD documentation.

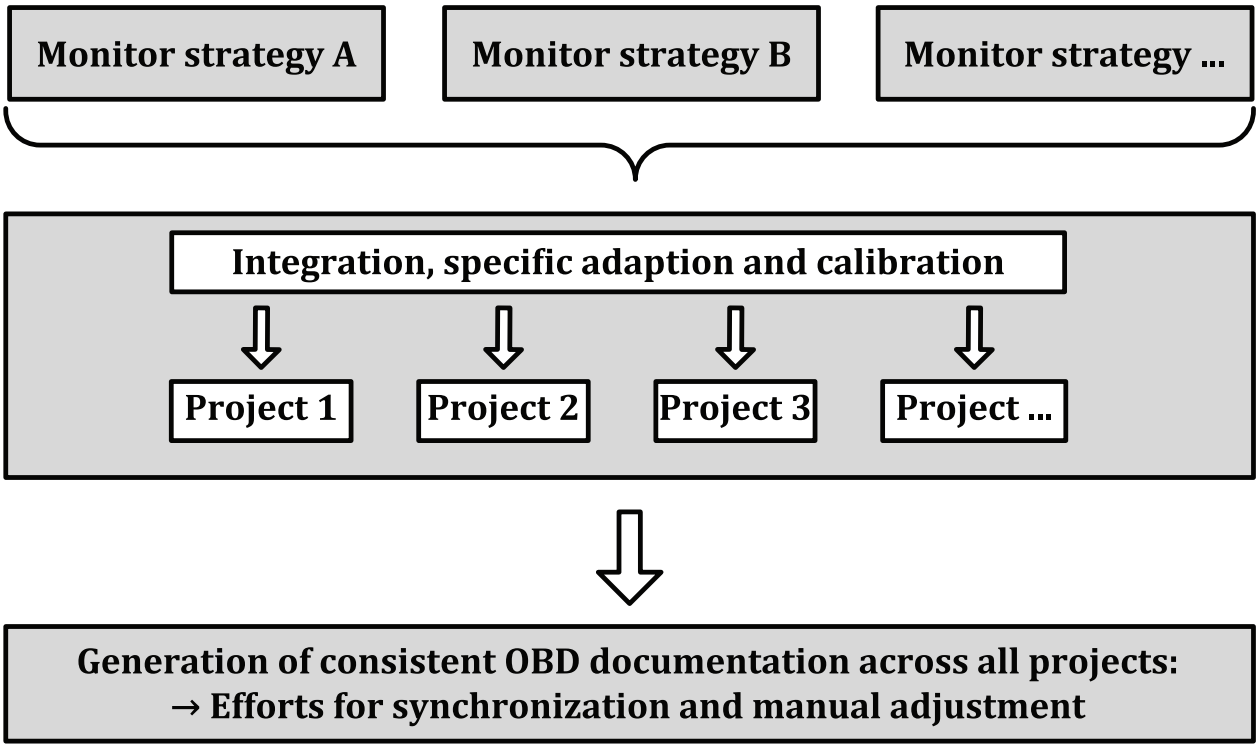

Figure 2 — Project complexity and accurate OBD documentation

In addition more complicated business models (multiple job shares across companies) challenge the OBD documentation process.

In the past, typically one ECU supplier also supplied most of the corresponding software. Nowadays and even more in future with the Autosar approach, the trend towards software packages from vehicle manufacturer and 3rd parties will increase.

As a consequence, multiple suppliers provide the information for the generation of OBD documentation with different format, structure and content. For understanding, it is often necessary to dig into the details of the complete software documentation itself. This is why the efforts for the integration and generation of OBD relevant information increases due to manual analysis and adjustment. Obviously this scenario will allow only a limited reuse.

Figure 3 shows the challenging job share and consistent OBD documentation.

© ISO 2018 – All rights reserved
Documents
Document Sharing Hub
Full document details: BS ISO 22901-3:2018

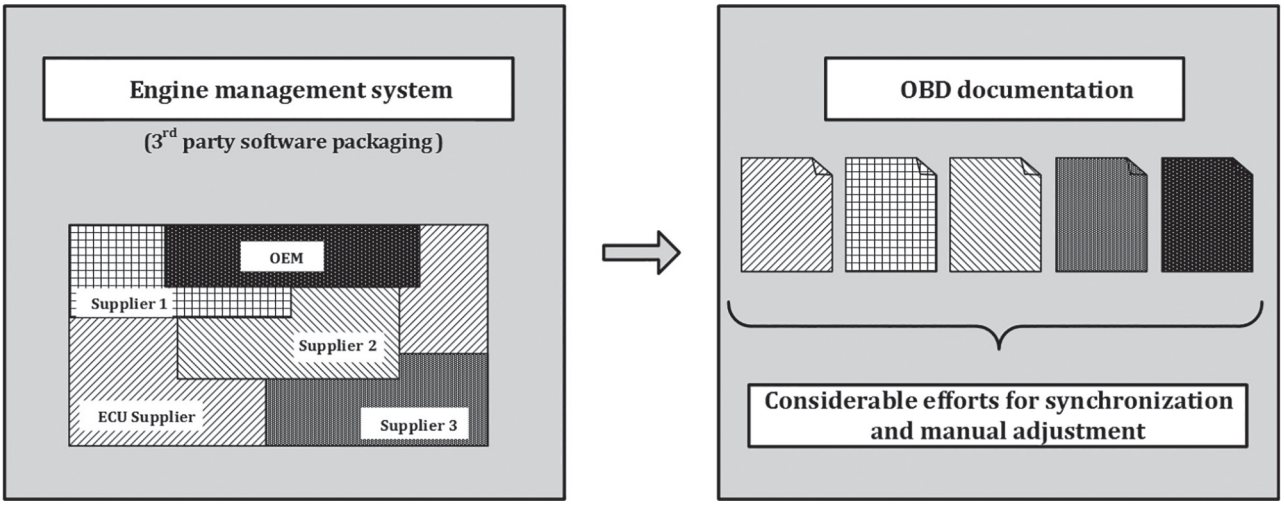

Figure 3 — Job sharing challenge and consistent OBD documentation

Scheduling constraints for generating OBD documentation during the development phase also represent a motivating factor for the introduction of the FXD approach. As the OBD development has become more and more extensive, the documentation is established as early as possible, but on the other hand late changes will cause iterations. Without efficient management of the corresponding OBD-relevant information, it is nearly impossible to answer to the challenging engineering targets and tight project schedules of today.

© ISO 2018 – All rights reserved

Documents
Document Sharing Hub
Full document details: BS ISO 22901-3:2018

Documents
Document Sharing Hub

Road vehicles — Open diagnostic data exchange (ODX) —

Part 3:
Fault symptom exchange description (FXD)

1 Scope

This document specifies machine-readable descriptions of all fault symptom algorithms which are implemented as diagnostic software in an electronic control unit (ECU). The main use case is the standardized data exchange from a function & software supplier to a vehicle manufacturer (VM) in order to enable a tool-based information processing. Based on the FXD content and associated calibration values, several end user documents can be generated such as the "summary sheet" needed as part of the vehicle type approval documentation package or the “repair and maintenance information” (RMI). The expected main benefits of the FXD approach are an overall efficiency improvement as well as an independency of supplier- and VM-specific format handling.

2 Normative references

The following documents are referred to in the text in such a way that some or all of their content constitutes requirements of this document. For dated references, only the edition cited applies. For undated references, the latest edition of the referenced document (including any amendments) applies.

ISO 22901-1, *Road vehicles — Open diagnostic data exchange (ODX) — Part 1: Data model specification*

SAE J1930-DA, *Digital Annex of E/E Systems Diagnostic Terms, Definitions, Abbreviations, and Acronyms*

SAE J1979-DA, *Digital Annex of E/E Diagnostic Test Modes*

SAE J2012-DA, *Digital Annex of E/E Diagnostic Trouble Code Definitions and Failure Type Byte Definitions*

3 Terms and definitions

No terms and definitions are listed in this document.

ISO and IEC maintain terminological databases for use in standardization at the following addresses:

— IEC Electropedia: available at http://www.electropedia.org/

— ISO Online browsing platform: available at http://www.iso.org/obp

4 Abbreviated terms

For the purposes of this document, the abbreviated terms given in SAE J1930-DA, SAE J1979-DA and SAE J2012-DA and the following apply.

a2l	ASA P2 description file
AUTOSAR	AUTomotive Open System ARchitecture
DCY	driving cycle
DTC	diagnostic trouble code

© ISO 2018 – All rights reserved

Documents
Document Sharing Hub
Full document details: BS ISO 22901-3:2018

ECU	electronic control unit
enum	enumeration
FCM	fault code memory
FID	function identifier
FXD	Fault symptom eXchange Description
HDO	ASAM harmonized data objects
MCL	monitoring checklist
MIL	malfunction indicator light
OBD	on-board diagnostics
OEM	original equipment manufacturer
OID	object identifier
OSC	oxygen storage capacity
RMI	repair and maintenance information
SENT	single edge nibble transmission
SI	système international d'unités
SW	software
URI	uniform resource identifier
VM	vehicle manufacturer
W3C	world wide web consortium
XML	extended mark-up language

5 Specification release version information

5.1 Specification for FXD XML-Schema release version

The schema specification release version of this document is: 2.0.0.

6 FXD concept

6.1 Overview

The automotive industry specified the requirements for provision of OBD-relevant information and developed a corresponding concept and format.

The main objectives were:

— Develop a machine-readable automotive format,

  — for single source of fault symptom description for different documentation use cases (e.g. type approval, repair and maintenance information) across project variants;

© ISO 2018 – All rights reserved
Documents
Document Sharing Hub
Full document details: BS ISO 22901-3:2018

— for possible data processing utilizing state-of-the-art tooling;

— the use of XML as a base technology for the format definition (FXD XML-Schema);

— the reuse of structural patterns based on ISO 22901-1;

— the naming of structure elements which shall be close to the end user's needs.

6.2 Traditional workflow

Traditionally, the FXD-relevant information is exchanged between vehicle manufacturers and ECU software suppliers based on proprietary templates and formats.

Even the main FXD use cases "type approval" and "repair and maintenance information" are driven by different stakeholders and lead to incompatible exchange formats and processes for one and the same vehicle manufacturer.

The software suppliers have to process the full variety of templates and formats with limited reuse and a lot of manual interaction.

Finally, the integration and document generation at the vehicle manufacturer's site cannot be automated due to the non-availability of stable and standardized data formats.

6.3 Raw information

6.3.1 General definition and background

An abstract and structured description of all conditions/criteria/parameters that influence the monitoring process or strategy. It shall be possible to detect and heal a real fault via test conducted by using the "raw information" description.

The "raw information" description is a neutral description which is not biased towards any vehicle-manufacturer-specific end-user documentation.

"Raw information" descriptions will naturally need a subsequent, manual adaptation to reflect the respective requirements of the vehicle manufacturer, the project and end user documentation. This manual adaptation is within the responsibility of the vehicle manufacturer, see 6.4.

6.3.2 Requirements

6.3.2.1 General

“Raw information” descriptions shall be designed in a way to enable an automated value analysis when the relevant calibration labels are entered.

“Raw information” descriptions should refer to the corresponding software implementation. Therefore, a certain abstraction of software implementation is necessary. Furthermore, formal editing features have to be used to improve the readability (e.g. logical grouping of conditions / use of headlines where appropriate). For specific rules, see FXD rules.

The sequence of the fault detection algorithm shall be described by using a formal language. This formal language shall allow automatic processing of the information like the substitution of physical units, replacement of variable names (e.g. for different language areas), replacement of calibration labels and system constants by values, simplification and partial evaluation of expressions. The formal language shall allow the visualisation of the information for various audiences. It shall optionally be possible to describe algorithms textually if a formal description is not feasible or not desired.

© ISO 2018 – All rights reserved

Documents
Document Sharing Hub
Full document details: BS ISO 22901-3:2018

6.3.2.2 Requirements for generating of raw information descriptions

Detailed requirements are defined in the rules for generation of FXD descriptions as detailed in Annex C.

6.3.2.3 Requirements for readers of "raw information" description

The information provided by the “raw information” description shall enable technically skilled staff with a general knowledge of vehicles, but no specific knowledge of diagnostics/OBD, to understand the physical process of the monitor.

Requirements:

— general engine and vehicle knowledge;

— general knowledge of diagnostics and OBD; and

— knowledge of this document (FXD).

The supplier will not assume any responsibility in case this “raw information” is forwarded to further audiences (e.g. certification authority, aftersales/service). An FXD file as provided by the supplier will not contain values of referenced calibration labels.

In case information may consist of prescribed values only, respective generic selection lists, will be provided and maintained by ISO.

6.4 FXD format and example

The main challenges for the FXD XML-Schema lie in meeting the documentation requirements of the "OBD summary sheet".

In order to enable an automatic publishing process from the FXD format to an "OBD summary sheet", all relevant information needs to be captured in the FXD format.

The fault symptom is the main structure criterion for the "OBD summary sheet". All fault-symptom-related information is organized underneath the corresponding node inside the FXD-Schema, which is called "FAULT-SYMPTOM".

Within the "OBD summary sheet" the most complex information deals with nested algorithmic expressions for "MALFUNCTION-CRITERIA" and "ENABLE-CONDITIONS". No control structures as known from programming languages are necessary.

Sample expression:

<parameter_1(operand)> < greater than…(operator)> < threshold_1(operand)>

<and/or (operator)>

<parameter_2(operand)> < less than…(operator)> < threshold_2(operand)>

The operands and operators have to be marked separately within the XML structure, as both have to be prepared for specific rendering, e.g. publishing to different table columns.

As the FXD data delivered by the software supplier will contain raw data based on the software implementation, a refinement concept is necessary to support different use cases. Therefore, the principle of inheritance is introduced to FXD, i.e. the symptom related raw data can be refined for a specific use case just by adding refined information characteristics to the FXD data. Later on, the tool chain will process the use-case-specific characteristics.

The raw data will contain software names for parameters and calibration data labels for e.g. thresholds. For generating OBD documentation, the software names have to be replaced by an end-user wording and the calibration data labels have to be replaced by the corresponding values. Both replacement mechanisms need to be supported by the FXD format.

© ISO 2018 – All rights reserved
Documents
Document Sharing Hub
Full document details: BS ISO 22901-3:2018

In addition to the requirements described above, the following content requests were taken into account to specify the FXD-Schema.

— interlocking matrix;

— management of FXD data at the vehicle manufacturer's site (e.g. ID management, link to function and software specifications, ...); and

— repair and maintenance information (e.g. language attribute).

Figure 4 shows the OBD summary sheet as one main motivation for the FXD format definition.

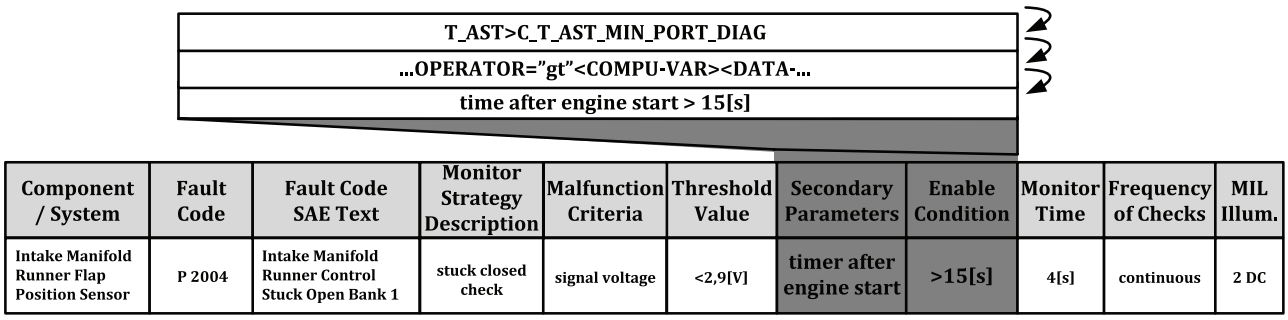

Figure 4 — OBD summary sheet as one main motivation for the FXD format definition

6.5 Basic concept of FXD

6.5.1 Basic requirements

The modelling of algorithmic expressions is a core part of the FXD-Schema and will be explained more in detail.

After analysing the content of the OBD summary sheets for algorithmic expressions, the following requests were captured:

— enable a formal description of nested algorithmic expressions, which are based on the software implementation;

— enable formal expressions (one operand may be a text string), which cannot be mapped 1:1 to the software implementation, but are necessary to reduce complexity;

— enable free text for e.g. repair and maintenance information; and

— enable direct re-use of raw information.

6.5.2 Formal description of diagnosis algorithms

For the description of fault-symptom-related conditions, the element COMPUTATION, is introduced. It can be:

— either a formal expression (ABSTRACT-SYNTAX); or

— an informal description (EXPLANATION).

The ABSTRACT-SYNTAX represents an expression tree, whose nodes may be:

— an operator (or function) OP with its arguments (operands) as child nodes (which might be again an expression tree);

— a variable COMPU-VAR, which consists of a reference DATA-DECLARATION-REF to an ECU variable, calibration parameter or system constant;

© ISO 2018 – All rights reserved

AVA Documents Document Sharing Hub
Full document details: BS ISO 22901-3:2018

— a constant COMPU-CONST, which can be one of the following:

  — numerical value V;

  — string constant VT; or

  — boolean value VB.

The meaning of the operator OP is specified by its OPERATOR attribute. The set of valid operators is not specified in the FXD XML-Schema itself, but as digital Annex A of this document to provide the possibility to extend it without a schema change or change of the main document.

The EXPLANATION consists of an informal description DESC, providing multiple paragraphs and some standard XHTML features, and an optional set of references DATA-DECLARATION-REFS to ECU variable(s), calibration parameter(s) and system constant(s), which allows the declaration of dependencies on the ECU-data.

Figure 5 shows the COMPUTATION and ABSTRACT-SYNTAX as FXD core elements.

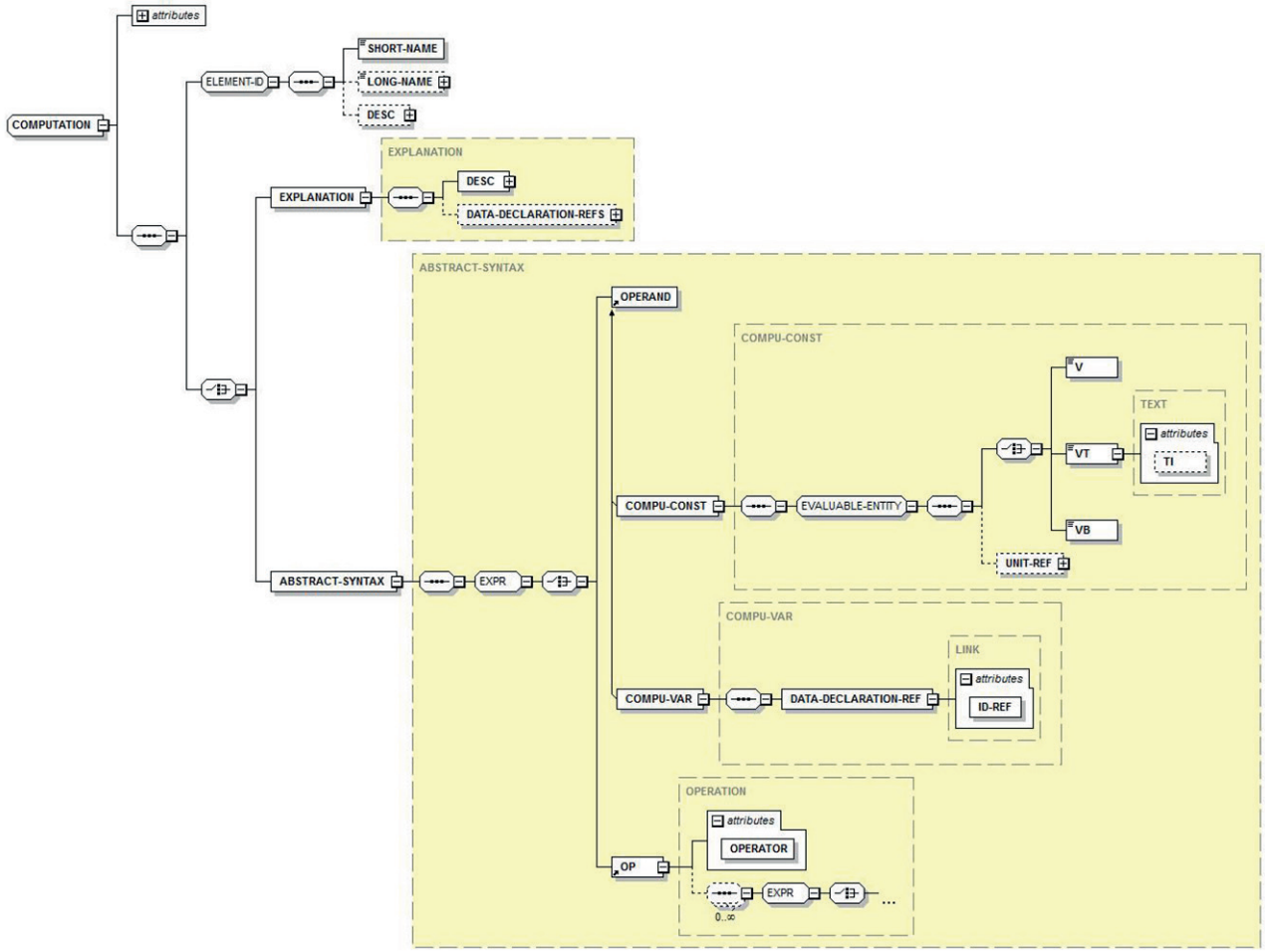

Figure 5 — COMPUTATION and ABSTRACT-SYNTAX as FXD core elements

6.5.3 Value inheritance mechanism to support use cases

Use cases in cluster 3 (see Figure 8) support the possibility to add use-case-specific representations of fault symptoms to an FXD file. A main use case in focus is the "adaptation" of malfunction criteria (FAULT-DETECTION-CRITERIA) and secondary parameters (ENABLE-CONDITIONS) by the vehicle manufacturer to comply with legislative requirements for creating type-approval-related documents. Other use cases may be representations of fault symptoms in different languages or for specific user groups.

© ISO 2018 – All rights reserved
Documents
Document Sharing Hub
Full document details: BS ISO 22901-3:2018

A value inheritance mechanism is used as follows:

For each use case, an additional instance of a fault symptom can be created ("child fault symptom"), having the same name (SHORT-NAME) as the fault symptom which is derived from ("parent fault symptom").

Each child fault symptom refers to exactly one parent fault symptom. It is allowed to refer either to a fault symptom base specified by the supplier or to another existing child fault symptom.

In a child fault symptom, all sub-elements are optional to allow modification of arbitrary parts of the information of a fault symptom only.

All information, which is not specified in the child fault symptom, will be obtained from its parent hierarchy.

A child fault symptom shall not define a fault detection with a name (SHORT-NAME) that is not defined by its parent. A child fault symptom may only redefine inherited fault detections.

Implementation of value inheritance

The value inheritance mechanism applies to the elements FAULT-SYMPTOM and VARIABLE-DESCRIPTION. These elements have an SI attribute which specifies the use case. The initial FAULT-SYMPTOM or VARIABLE-DESCRIPTION from which other item descriptions are derived is called “base fault symptom” or “base variable description. The use case of these base items is “raw-information” (RAWINFO).

In order to establish value inheritance, a FAULT-SYMPTOM or VARIABLE-DESCRIPTION shall render a PARENT-REF element. The PARENT-REF refers to the parent item from which the FAULT-SYMPTOM or VARIABLE-DESCRIPTION wants to inherit. The parent item and the child item shall have the same SHORT-NAME.

The implementation of FXD value inheritance in XML-Schema makes use of the rather uncommon technique of derivation by restriction. XML-Schema allows the definition of a type by restricting the occurrences and contents of elements from the type from which it is derived.

A base symptom or variable description shall provide a minimum of information, specified by the non-optional elements. Fault symptoms or variable descriptions which make use of the FXD value inheritance only render elements which they redefine. In the simplest case, a derived fault symptom does not redefine anything but inherits all properties from its parent or ancestors. In this case the FAULT-SYMPTOM element would only have three child elements: SHORT-NAME, COMPANY-DATA-REF and PARENT-REF. Thus, the XML-Schema shall allow all other elements of a derived item to be optional.

The solution is to use XML-Schema mechanism “derivation by restriction” to define a base fault symptom type (FAULT-SYMPTOM-BASE) and a base variable description type (VARIABLE-DESCRIPTION-BASE). In the resulting FXD-XML-document, a base element is tagged with the attribute xsi:type="FAULT-SYMPTOM-BASE" or xsi:type=”VARIABLE-DESCRIPTION-BASE”.

6.6 FXD workflow

By introducing a machine-readable and standardised exchange format for the description of fault symptoms it is possible to improve the overall workflow.

The variety of formats and templates will be replaced by this document on the ECU software supplier's side. This will enable a homogeneous tool chain and a reuse of FXD data. The ECU software supplier will deliver "raw data", i.e. data, which are based on the software implementation and will be refined by the vehicle manufacturer depending on the use case.

For the vehicle manufacturer, the following tasks can be efficiently supported by tools in order to reduce the manual interaction:

— integration of FXD data from different ECU software suppliers;

© ISO 2018 – All rights reserved

Documents
Document Sharing Hub
Full document details: BS ISO 22901-3:2018

— refinement of FXD data for different use cases (type approval, repair and maintenance information);

— enhancement of FXD data with calibration values; and

— creation of end user documents.

Figure 6 shows a possible FXD workflow.

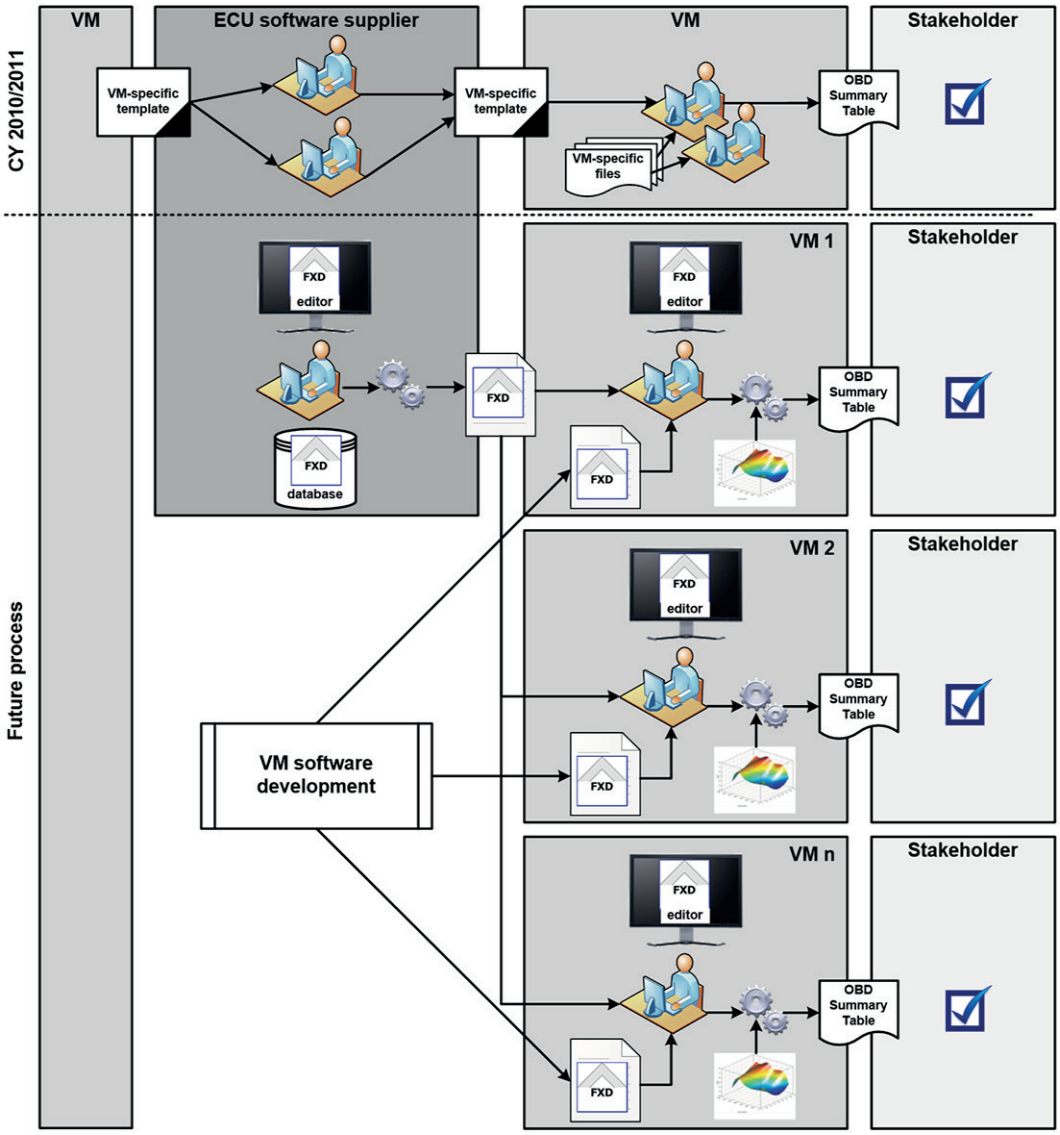

Figure 6 — Possible FXD workflow

6.7 FXD workflow example

A possible FXD workflow is shown below, choosing the "enable condition" of the fault symptom "Intake Manifold Runner Control - Stuck Open – Bank 1" as an example.

Step 1: Manage raw data on the ECU software supplier side

The raw data will either be entered into an FXD editor or be retrieved from existing systems. A dedicated FXD tool is required in order to manage the information. The raw data are based on software names, which are software-supplier-specific.

© ISO 2018 – All rights reserved
Documents
Document Sharing Hub
Full document details: BS ISO 22901-3:2018

For the ABSTRACT-SYNTAX a set of rules are implemented, which allow to provide feedback regarding problems within algorithmic expressions. In addition, features like auto completion and checks for valid software names are recommended to be implemented.

Step 2: Create the FXD – XML file

Once the fault symptom information is completed on the ECU software supplier side, which is an iterative step along the software development process, there is the possibility to create an FXD file according to the FXD-Schema. This file will be delivered to the vehicle manufacturer.

Step 3: Integrate and refine the FXD information on the vehicle manufacturer side

After receiving the FXD information from the supplier, the vehicle manufacturer will integrate the FXD parts into a FXD repository. Depending on the complexity of the fault symptom algorithm, it is necessary to refine the description for the different use cases. For the chosen example no refinement is necessary, as it is a simple enable condition. In addition, it is necessary to introduce a use-case-specific alias name for software parameters. In this example the alias name "time after engine start" is introduced for the original software-name T_AST.

Step 4: Generate the OBD summary sheet

After finalising the integration and refinement steps, the information is ready to be processed for end-user documentation. The value of C_T_AST_MIN_PORT_DIAG will be retrieved from the calibration value set. The unit (identical structural pattern as specified in ISO 22901-1) is part of the FXD label definition. Finally a rendering process will use the corresponding information in order to publish the information "Time after engine start > 15 s".

Figure 7 shows the processing steps in order to create the OBD summary sheet information.

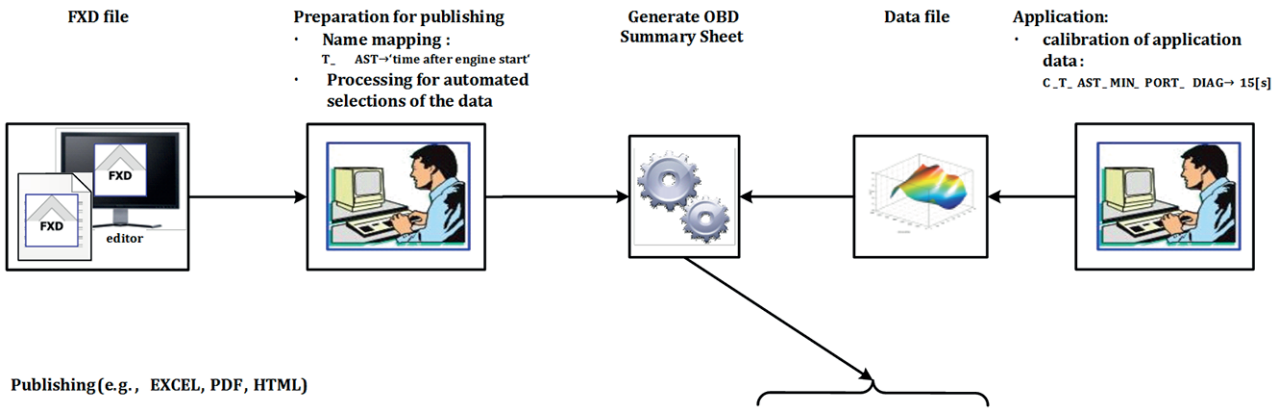

Component / System	Fault Code	Fault Code SAE Text	Monitor Strategy Description	Malfunction Criteria	Threshold Value	Secondary Parameters	Enable Condition	Monitor Time	Frequency of Checks	MIL Illum.
Intake Manifold Runner Flap Position Sensor	P2004	Intake Manifold Runner Control Stuck Open Bank 1	stuck closed check	signal voltage	<2, 9[V]	time after engine start	> 15[s]	4[s]	continuous	2 DC

Figure 7 — Processing steps in order to create the OBD summary table information

6.8 Constraints for schema updates

The update of the FXD XML-Schema to fulfil new requirements can cause having to update the tooling on both sides, supplier and OEM. Further, for new required fields the suppliers may need a phase-in time to generate the new descriptions.

In order to allow a continuous work with the latest schema version, the standard text “empty due to migration to new schema” is introduced.

© ISO 2018 – All rights reserved

Documents
Document Sharing Hub
Full document details: BS ISO 22901-3:2018

The suppliers shall use the standard text “empty due to migration to new schema” to identify new mandatory text fields that could not be filled with a proper description. This new standard text shall be used only on mandatory text fields. New optional fields will not be created.

7 FXD use cases

7.1 General

This document has been specified in order to exchange information related to electronic control unit (ECU) fault symptoms between ECU software supplier and vehicle manufacturer.

This document specifies:

— the contents of the fault symptom exchange description (FXD) on a per-fault symptom basis;

— the XML-based structure of the fault symptom exchange description (FXD XML-Schema); and

— the supported use case for the exchange of the above mentioned description.

Figure 8 shows the principal information flow and use cases overview.

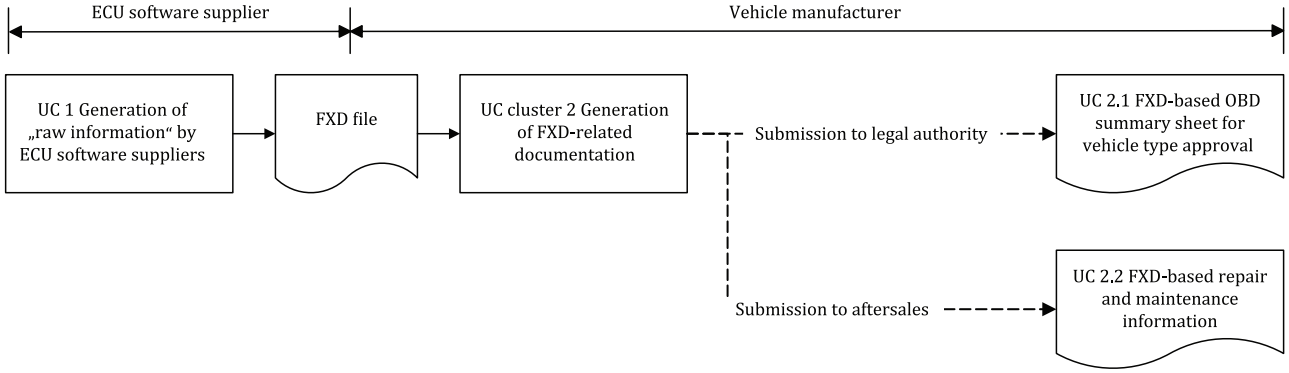

Figure 8 — Principal information flow and use cases overview

7.2 UC 1 Delivery of "raw information" by ECU software suppliers

Table 1 specifies the UC 1 Delivery of "raw information" by ECU software suppliers.

Table 1 — UC 1 Delivery of "raw information" by ECU software suppliers

Use case name	UC 1 Delivery of "raw information" by ECU software suppliers
Goal	Delivery of "raw information" from the ECU software program version by ECU software suppliers supports the generation of the FXD-based OBD summary sheet and fault symptom information for aftersales repair & maintenance information.
Actor	ECU software supplier
Use case input	ECU software program version
Use case output	FXD-XML raw information specific to the ECU-software-program version
Brief description	The 'raw' fault symptom information is provided as a so-called "fault symptom base". This representation of a fault symptom may not be suitable for different vehicle manufacturer-specific use cases, therefore additional representations of the same fault symptom can be added. For a more detailed description of the mechanism used, see 6.5.3.

In addition to a program version delivered to a vehicle manufacturer, the supplier may deliver a corresponding file, containing a negotiated description of fault symptoms supported by the respective program version. This file will be referred as FXD file.

© ISO 2018 – All rights reserved
Documents
Document Sharing Hub
Full document details: BS ISO 22901-3:2018

Any information provided has to be considered as "raw information".

7.3 UC 2 – Generation of documentation based on FXD raw information

7.3.1 UC 2.1 Generation of OBD summary sheet for vehicle type approval

Table 2 specifies the UC 2.1 Generation of OBD summary sheet for vehicle type approval.

Table 2 — UC 2.1 Generation of OBD summary sheet for vehicle type approval

Use case name	UC 2.1 Generation of OBD summary sheet for vehicle type approval
Goal	Generate OBD summary sheet from FXD file as documentation for vehicle type approval
Actor	Vehicle manufacturer
Use case input	program version data version FXD-XML "raw information" specific to the ECU-software-program version information on disabling relations between the individual symptoms legal requirements other information as deemed necessary
Use case output	OBD summary sheet shall contain: component / system name; legislation-referenced DTC; customer code (DTC); customer code (customer fault text); monitor strategy description; malfunction criteria; threshold value; secondary parameters; enable conditions; fault debouncing; monitoring frequency; MIL illumination; ...
Brief description	The information supplied in the raw information is prepared according to the vehicle manufacturer's specifications, taking further input information (e.g. legal requirements) into account, and it is converted into wording that is understandable for the authority. The vehicle manufacturer then replaces the application labels used in the raw information with the application values according to the specific program and data version of the project to be described. See Figure 11.

7.3.2 UC 2.2 FXD-based repair and maintenance information

Table 3 specifies the UC 2.2 FXD-based repair and maintenance information.

© ISO 2018 – All rights reserved

Documents
Document Sharing Hub
Full document details: BS ISO 22901-3:2018

Table 3 — UC 2.2 FXD-based repair and maintenance information

Use case name	UC 2.2 FXD-based repair and maintenance information
Goal	Generate FXD-based repair and maintenance information as part of the vehicle manufacturer's service information publication package to repair garages
Actor	Vehicle manufacturer
Use case input	program version; data version; FXD-XML "raw information" specific to the ECU-software-program version; information on disabling relations between the individual symptoms; and other information as deemed necessary.
Use case output	Instructions for guided troubleshooting. Service information sheet shall contain: component / system name; legislation-referenced DTC; customer code (DTC); customer code (customer fault text); monitor strategy description; OK-DETECTION-CRITERIA; threshold value; secondary parameters; enable conditions; OK-DEBOUNCE; malfunction criteria; MIL illumination; substitution function; protection function; ...
Brief description	After finalising the integration and refinement steps (see 6.6), the information is ready to be processed for end-user documentation. In addition to the information about the fault detection, information for service concerning fault healing is processed as well.. Finally, a rendering process will use the corresponding information in order to publish the information, e.g. "Time after engine start > 15 s".

8 General properties of FXD elements

8.1 Attributes

Generally, there are two kinds of attributes:

Content: Attributes that support an assessment of the content of the related FXD element. This information is used to control further processing of the FXD information itself.

Infrastructure: Attributes that are used to identify the internal XML-structure of an FXD description

In the following, the existing attributes are introduced.

© ISO 2018 – All rights reserved
Documents
Document Sharing Hub
Full document details: BS ISO 22901-3:2018

8.1.1 DESC-EXTENT (Content)

DESC-EXTENT identifies the completeness of the related description of the fault symptom.

It is defined for the elements:

— FAULT-SYMPTOM

— VARIABLE-DESCRIPTION

Table 4 definies the supported values of the attribute DESC-EXTENT.

Table 4 — Supported values of DESC-EXTENT

Value	Explanation
COMPLETE	To identify a complete description
PARTIAL	To identify an incomplete description. PARTIAL shall only be used in case the supplier is not responsible for the missing parts of the description, e.g. in case of diagnostics performed by a smart device.

The attribute DESC-EXTENT needs to be distinguished from DESC-STATE. The attribute DESC-STATE shall be used to identify descriptions that are – from the author's perspective and responsibility – not yet finalised and therefore not yet mature.

8.1.2 HREF (Content)

HREF identifies an external document by an URI. If the URI is not absolute (i.e. it does not start with a scheme) then it is resolved first against the base URI specified by xml:base, second against the URI of current document location.

e.g. HREF="http://www.iso.org/iso/iso_catalogue/catalogue_tc/catalogue_detail.htm?csnumber=60264"

It is defined for the elements:

EXTERNAL-DOC

8.1.3 ID (Infrastructure)

ID provides an XML-internal identifier for the related element, which can be used to refer to this element, see ID-REF.

e.g.: ID="ID47110815"

It is defined for the elements:

— AUXILIARY-OBJECT;

— COMPANY-DATA;

— COMPUTATION;

— DATA-DECLARATION;

— FAULT-DETECTION;

— FAULT-SYMPTOM;

— FAULT-SYMPTOM-3RD-PARTY;

© ISO 2018 – All rights reserved

Documents
Document Sharing Hub
Full document details: BS ISO 22901-3:2018

— FID;

— MASK;

— PHYSICAL-DIMENSION;

— SERVICE-06-ID;

— UNIT; and

— VARIABLE-DESCRIPTION.

The value of ID shall conform to standard XML type xs:ID.

8.1.4 ID-REF (Infrastructure)

ID-REF is used to refer to another XML element by specifiying the value its ID attribute, see ID.

e.g.: ID-REF="ID47110815"

It is defined for the elements:

— AUXILIARY-OBJECT-REF;

— COMPANY-DATA-REF;

— COMPUTATION-REF;

— DATA-DECLARATION-REF;

— FAULT-SYMPTOM-REF;

— FID-REF;

— MASK-REF;

— PARENT-REF;

— PHYSICAL-DIMENSION-REF;

— SERVICE-06-ID-REF; and

— UNIT-REF.

8.1.5 OID (Content)

OID is used for invariant identification of an FXD element but not for linking. Any FXD compliant tool shall not change the content of the OID (if present) over the whole life cycle of the concerned element. Any system that provides import/export facilities of FXD into another format shall ensure to maintain an OID during an import / modify / export cycle. The provider is responsible to ensure the uniqueness of the OID. Therefore, the use of Universally Unique Identifiers (UUIDs) as described in ISO/IEC 11578:1996 is recommended.

e.g. OID="499848a3-d5a2-48d9-bd45-525c99e903b3".

It is defined for the elements:

— FAULT-SYMPTOM; and

— VARIABLE-DESCRIPTION.

© ISO 2018 – All rights reserved
Documents
Document Sharing Hub
Full document details: BS ISO 22901-3:2018

8.1.6 OPERATOR (Content)

Operator specifies the specific FXD operator to be applied to the child elements of the current element.

e.g. OPERATOR="duration_of"

It is defined for the elements:

OP

The set of supported values consists of all specified FXD operators, in accordance with Annex A.

8.1.7 SI (Content)

SI (Semantic Information) specifies the semantic characteristic of the related element.

Table 5 defines the supported values of SI.

Table 5 — Supported values of SI

Value	Explanation
RAWINFO	For "neutral" descriptions delivered by the system supplier according to UC 2.
SUMMARY	For "final" descriptions created according to UC 2.1.
SERVICE	For "final" descriptions created according to UC 2.2.
OTHER	For other use cases

e.g. SI="RAWINFO"

It is defined for the elements:

— FAULT-SYMPTOM;

— TEXT-MAPPING; and

— VARIABLE-DESCRIPTION.

8.1.8 DESC-STATE (Content)

State specifies the maturity of the related element.

e.g. DESC-STATE="RELEASED"

It is defined for the elements:

— FAULT-SYMPTOM; and

— VARIABLE-DESCRIPTION.

Table 6 defines the supported values of the attribute DESC-STATE.

Table 6 — Supported values of DESC-STATE

Value	Explanation
INITIAL	For initial descriptions
DRAFT	For intermediate maturity
RELEASED	For finalised descriptions

© ISO 2018 – All rights reserved

Documents
Document Sharing Hub
Full document details: BS ISO 22901-3:2018

8.1.9 TI (Infrastructure)

TI (Text Identifier) provides an XML-internal identifier for the related textual element, which is intended to be used to specify alternative texts/formulations (e.g. in a different language).

e.g.: TI="TI47110816"

It is defined for the elements:

— DESC;

— DISPLAY-NAME; and

— VT.

TI consists of a string of arbitrary characters.

8.1.10 VERSION (Content)

Version provides the current version number of the FXD-Schema as the only supported value. It thus specifies the structure and content of the related FXD file.

It consists of three numbers 'x.y.z': 'x' will be increased in case of incompatible changes, 'y' will be increased in case of compatible changes (e.g. only optional elements are removed or added), 'z' is increased for bug fixes.

Note, that in any case former documents become invalid with respect to the new schema version because at least the FXD version number has changed. Applications shall consider this issue and decide whether or not to accept a FXD document

e.g.: VERSION="1.5.0"

It is defined for the elements:

FAULT-SYMPTOM-EXCH-DESC

The specified schema version shall be used for validation purposes of an FXD file.

8.1.11 xml:base (Infrastructure)

xml:base is a World Wide Web Consortium recommended facility for defining base URIs for parts of XML documents.

It is defined for the elements:

FAULT-SYMPTOM-EXCH-DESC

8.1.12 xml:lang (Infrastructure)

xml:lang is used to specify the natural language in which the content of the related element is given.

It is defined for the elements:

— COMPUTATION;

— FAULT-SYMPTOM;

— FAULT-SYMPTOM-EXCH-DESC;

— TEXT-MAPPING; and

— VARIABLE-DESCRIPTION.

© ISO 2018 – All rights reserved
Documents
Document Sharing Hub
Full document details: BS ISO 22901-3:2018

For supported values, refer to http://www.iso.org/iso/home/standards/language_codes.htm.

8.1.13 xsi:nil (Content)

xsi:nil is used to allow empty content at dedicated mandatory elements.

It is allowed for the following elements and has the following semantic:

— CUSTOM-CODES / no custom code existing;

— ENABLE-CONDITIONS / no enable condition existing;

— FAULT-DEBOUNCE / no fault debounce existing;

— LEGAL-CODE / no legal code existing;

— LEGISLATIONS / no legislations existing;

— OK-DEBOUNCE / has same content as FAULT-DEBOUNCE;

— OK-DETECTION-CRITERIA / is logical inversion of content of FAULT-DETECTION-CRITERIA; and

— OK-ENABLE-CONDITIONS / has same content as ENABLE-CONDITIONS.

In order to enable this attribute, the respective element shall have the nillable attribute set to true in the corresponding schema definition.

8.1.14 xsi:type (Infrastructure)

xsi:type shall be used to specify the proper XML type in the schema in case of ambiguities. Here, it is needed to select the base type for inheritance for fault symptoms and variable descriptions with attribute SI attribute set to RAWINFO.

It is defined for the following elements with the following values:

— FAULT-DETECTION / @xsi:type="FAULT-DETECTION-BASE";

— FAULT-DETECTIONS / @xsi:type="FAULT-DETECTIONS-BASE";

— FAULT-SYMPTOM / @xsi:type=”FAULT-SYMPTOM-BASE”; and

— VARIABLE-DESCRIPTION / @xsi:type=”VARIABLE-DESCRIPTION-BASE”.

8.2 Variant coding

The following different types of variant coding have been identified:

— Depending on the value of a calibration label different algorithms are activated in the software: These conditions will be provided as part of the COMPUTATIONS (e.g. referenced by ENABLE-CONDITIONS) in the FXD file.

— Depending on the value of a function-internal calibration label, algorithms may be activated or deactivated. These labels are described in a dedicated element, for details see DISABLE-REPORT-ONLY (see 9.6.11.13) and DISABLE-FULLY (see 9.6.11.14).

— Multiple calibration data sets exist for one program version, which means that one calibration label may represent different values for different data sets: The FXD file as provided by the supplier will contain generic calibration label names only, so this use case is not considered.

© ISO 2018 – All rights reserved

Documents
Document Sharing Hub
Full document details: BS ISO 22901-3:2018

8.3 Generic selection lists

For several information elements, the values shall be derived from general selection lists (in accordance with Annex B):

— MON_COMPONENT;

— MON_FREQUENCY;

— READINESS_GROUP;

— RATIO_GROUP;

— MCL_STRATEGY (legislation-reference);

— SIMULATION_METHOD; and

— GENERIC_TYPE.

These generic selection lists shall be versioned, released and provided by ISO.

Constraints for selection list content:

— existing values from all older versions shall remain valid; and

— new versions will not be applied to existing data.

According to the various examples provided so far, spaces and special characters have to be supported. So, arbitrary strings will be supported without additional mark-up for all selection lists in the schema.

8.4 External document references

If required, an arbitrary number of external documents (e.g. images, complex descriptions) may be referenced from the DESC and the RESOURCES element, using the optional structure EXTERNAL-DOCS.

8.5 Referencing ECU variables and calibration labels

To refer to ECU variables or calibration labels, the element DATA-DECLARATION is introduced. A DATA-DECLARATION contains the name of the variable or calibration label, including "[...]" for array element access and "." for substructure access, if required, e.g. "DSM.DFC_test".

NOTE In case of variant coded calibration labels, only the generic name will be provided, see 8.2.

Additional information about labels shall be obtained from the 'a2l' file, if necessary, e.g. physical units, axes labels of curves and maps.

Each DATA-DECLARATION may be referenced where appropriate using a DATA-DECLARATION-REF. This allows multiple references to the same DATA-DECLARATION for reuse.

8.6 General FXD elements, used for identification and description

The following group of FXD elements is used to uniquely identify the fundamental elements of a diagnostic SW algorithm. These are mainly variables, calibration parameters and configuration parameters (system constants), fault symptoms, variable descriptions and FIDs.

It consists of:

— SHORT-NAME: mandatory identifier according to the specification of an ASAM HDO SHORT-NAME;

— LONG-NAME: optional element to provide a human readable name according to the specification of an ASAM HDO LONG-NAME; and

© ISO 2018 – All rights reserved
Documents
Document Sharing Hub
Full document details: BS ISO 22901-3:2018

— DESC: optional element for further details.

This group of elements is referred to as “Element-Id”.

9 Description of FXD elements

9.1 General

Subclauses 8.2 to 9.4 describe the FXD-Schema elements specifying general information needed e.g. for the exchange of the FXD file.

9.2 ADMIN-DATA

9.2.1 General

The ADMIN-DATA element is modelled similar to the ODX element with the same name, but some extensions are needed to specify the project-specific information (see 9.2.2 to 9.2.6).

9.2.2 COMPANY-DATA-REF

Within the COMPANY-DATA-REF, the company providing the FXD file (see 8.3) is referred by the attribute ID-REF.

9.2.3 ECU-FAMILY

The control unit family is to be entered to identify the type of control unit the descriptions are created for.

9.2.4 PROJECT

This element is used to identify the project. The project will be specified by its name (NAME) and its version (SW-BASELINE).

9.2.5 RESOURCES

The element RESOURCES shall be used to identify project-specific files, which are used as data base for the FXD file:

— DATA-DESCRIPTION shall contain a reference to the data description resource, e.g. 'a2l' file (mandatory);

— CALIBRATION shall contain a reference to the calibration data set (optional);

— EXTERNAL-DOCS may contain references to additional files used. Each EXTERNAL-DOC provides a textual explanation of the document and the reference to it by the attribute HREF.

9.2.6 DOC-REVISIONS

DOC-REVISIONS are a subset of the same element of ISO 22901-1.

This information is used to distinguish between different releases of a FXD file for one program version.

Each DOC-REVISION consists of

— REVISION-LABEL: optional text field to specifiy the version,

— STATE: mandatory element to specify the maturity by the predefined schema values:

  — DEVELOPMENT (for development deliveries to the vehicle manufacturer);

© ISO 2018 – All rights reserved

Documents
Document Sharing Hub
Full document details: BS ISO 22901-3:2018

  - SERIES (for series delivery to the vehicle manufacturer);
  - RELEASED (for released by the vehicle manufacturer).
- DATE: mandatory element to specify the delivery date.

9.3 COMPANY-DATAS

9.3.1 General

Information about all companies responsible for the FXD file contents (e.g. name, involved personnel) will be specified here. It is a subset of the same ISO 22901-1 ODX element. For each company one element COMPANY-DATA shall be provided.

9.3.2 COMPANY-DATA

COMPANY-DATA consists of the following elements, identifying a company and its members:

- Element-Id (see 8.6),
- TEAM-MEMBERS: optional element to provide information on company members. For details refer to ISO 22901-1.

NOTE ECU software suppliers will provide information about companies only.

9.4 DATA-DICTIONARY

9.4.1 DATA-DECLARATIONS

DATA-DECLARATIONS are used to describe control unit internal variables, calibration data types and system constants.

Each DATA-DECLARATION consists of:

- Element-Id (see 8.6);
- DATA/DATA-NAME: mandatory element that contains the ‘a2l’ name of the DATA-DECLARATION;
- DATA/DATA-TYPE: mandatory element to specify the type by one of the following predefined schema values:
  - CALIBRATED (for calibration data to be replaced when generating the summary sheets);
  - CALIBRATION-INFO (calibration data which is used for information and should not be replaced by its value);
  - NON-CALIBRATABLE (non calibratable constants, e.g. system constants);
  - ONLINE (variables);
  - STATE-VALUE (values of state machine variables);
- DATA/DISPLAY-NAME: optional element to provide the DISPLAY_IDENTIFIER from the 'a2l' file; and
- DATA/DATA-VALUE: optional structure to provide a Boolean (VB), a numerical (V) or a textual (VT) value together with an optional (reference to a) physical unit (via UNIT-REF).

A DATA-DECLARATION is referred by one or more computations. This list is introduced to enable reuse of DATA-DECLARATIONS. A precondition for the DATA-DECLARATIONS is that internal variables and calibration data are unique within their context ('a2l' file).

© ISO 2018 – All rights reserved
Documents
Document Sharing Hub
Full document details: BS ISO 22901-3:2018

9.4.2 COMPUTATIONS

A COMPUTATION is used to describe a computation algorithm in a formal or in a textual/verbal manner. A COMPUTATION consists of:

— Element-Id (see 8.6) and

— Either: ABSTRACT-SYNTAX: Formal syntax tree consisting of operators and operands. The operands can either be constants (COMPU-CONST) or variables (COMPU-VAR, referencing DATA-DECLARATIONs).

— Or: EXPLANATION: A textual, human-readable description.This variant can be used when an ABSTRACT-SYNTAX would be too complex, or a more human-friendly informal description is desired. It may also be useful if the details shall not be described but only the general purpose of the algorithm.

In either case the variables and calibration parameters etc. which the algorithm uses should be listed under DATA-DECLARATION-REFs. This helps to understand functional relationship between various variables.

Figure 9 visualises an ABSTRACT-SYNTAX expression (N > C_N_Thr + 1 000 rpm).

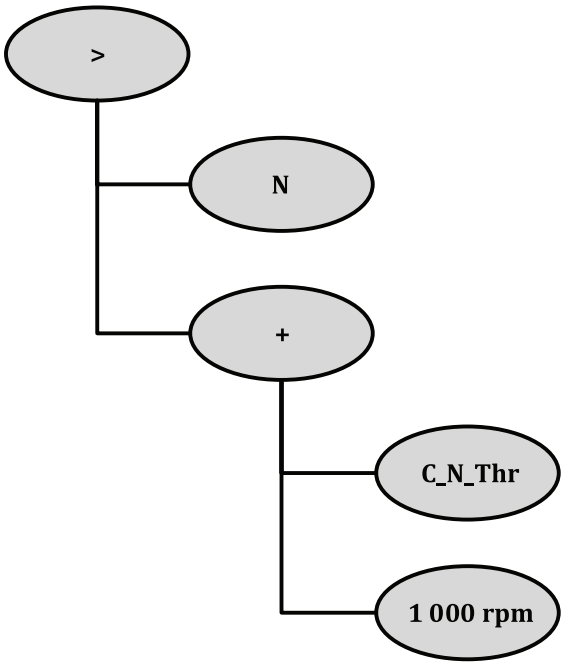

Figure 9 — Visualisation of an ABSTRACT-SYNTAX expression

A corresponding FXD representation is:

<ABSTRACT-SYNTAX>

<OP OPERATOR=”gt”>

<COMPU-VAR>

<DATA-DECLARATION-REF ID-REF="N"/>

</COMPU-VAR>

<OP OPERATOR=”add”>

<COMPU-VAR>

© ISO 2018 – All rights reserved

Documents
Document Sharing Hub
Full document details: BS ISO 22901-3:2018

<DATA-DECLARATION-REF ID-REF="C_N_Thr"/>

</COMPU-VAR>

<COMPU-CONST>

<V>1000</V>

<UNIT-REF ID-REF="rpm"/>

</COMPU-CONST>

</OP>

</OP>

</ABSTRACT-SYNTAX>

— It is important to note, that FXD computations are not required to be evaluable. It is completely legal to define a computation that would have the form (in pseudo-code): sqrt("some mysterious function"). This is because the main purpose of FXD is the description of functions, functional relationships, conditions and algorithms for documentation issues. However, FXD computations should be as formal as possible to allow automatic processing. This approach has some great advantages:

— FXD computations can be partly evaluated. For example calibration labels can be replaced by values and parts of the computation (sub-trees of the abstract syntax) can be reduced.

— The whole computation can be transformed so that variables or physical units are replaced. For example the condition V32 > 100 km/h can be automatically transformed into "current velocity" > 62 mph.

— Inconsistencies and circular dependencies can be detected.

— FXD computations can be further processed, especially for visualisation.

9.4.3 UNIT-SPEC

This list is introduced to enable reuse of physical units. They are referenced by a computation formula if needed for constant values.

The UNIT-SPEC including UNIT-GROUPS, UNITS, and PHYSICAL-DIMENSIONS is defined as a subset of the corresponding element in ISO 22901-1.

NOTE Physical units of variables and calibration labels are implicit and have to be derived from the 'a2l' file.

9.5 VARIABLE-DESCRIPTIONS

9.5.1 General

A VARIABLE-DESCRIPTION is used to describe the computation of an ECU variable (in FXD represented by a DATA-DECLARATION with DATA-TYPE set to "ONLINE") in detail. Within the schema, the element VARIABLE-DESCRIPTIONS is designed on the same level as the element FAULT-SYMPTOMS. It also includes the same meta information (COMPANY-DATA-REF, ECU-FUNCS, CONFIGURATION, attributes: DESC-EXTENT, DESC-STATE, ID, OID, SI, xml:lang)

A VARIABLE-DESCRIPTION supports three different **variable types**:

SIMPLE-VARIABLE: single COMPUTATION;

BIT-FIELD-VARIABLE: COMPUTATION for each contained BIT-FIELD; and

© ISO 2018 – All rights reserved
Documents
Document Sharing Hub
Full document details: BS ISO 22901-3:2018

STATE-GRAPH: definition of the STATES and COMPUTATION for each supported STATE-TRANSITION.

VARIABLE-DESCRIPTIONs are subject to the same value inheritance mechanism as FAULT-SYMPTOMs. For this purpose, there is a PARENT-REF element. See section on value inheritance.

If a VARIABLE-DESCRIPTION is inherited from another VARIABLE-DESCRIPTION the variable type shall not be changed. In addition, the complete information of the variable type can only be overwritten as a whole.

9.5.2 Element-Id

Key of variable description: supplier specific unique name, described in accordance with 8.6.

9.5.3 COMPANY-DATA-REF

This element contains the reference to the company providing the VARIABLE-DESCRIPTION.

9.5.4 ECU-FUNCS

The section specifies the names and the versions of the ECU-FUNCs, contributing to the calculation of the variable described.

Each ECU-FUNC consists of the two elements described below.

9.5.4.1 LONG-NAME

This is the supplier-specific name of the ECU-FUNC according to the specification of a HDO LONG-NAME as provided in the 'a2l' file.

9.5.4.2 VERSION

This element contains the version of the ECU-FUNC as given in the ‘a2l’ element FUNCTION_VERSION for the function calculating the described variable.

9.5.5 CONFIGURATION

This element contains the references to DATA-DECLARATIONS representing non-calibratable constants ("system constants") which have an influence on the calculation of the described variable.

9.5.6 DATA-DECLARATION described by a VARIABLE-DESCRIPTION

This element contains a reference to the DATA-DECLARATION element, which is described by this VARIABLE-DESCRIPTION.

9.5.7 SIMPLE-VARIABLE

A SIMPLE-VARIABLE is used if the variable (e.g. a byte or even a single bit) represents a single physical value, which is not a state (of a state machine). For this use case, the calculation is described by a single COMPUTATION.

9.5.8 BIT-FIELD-VARIABLE

If the value of a variable does not represent a single value but distinct bits or bit fields represent independent values (i.e. flags) the BIT-FIELD-VARIABLE element is used. A BIT-FIELD-VARIABLE consists of BIT-FIELDs, each of them representing a single physical value. A BIT-FIELD is defined by:

A LONG-NAME;

© ISO 2018 – All rights reserved

Documents
Document Sharing Hub
Full document details: BS ISO 22901-3:2018

A BIT-MASK (unsigned integer); and

A BIT-FIELD-COMPUTATION, referencing a COMPUTATION.

NOTE The BIT-FIELD-COMPUTATION returns a value for the bit field to be described, but it will not be aligned with the bit field position.

EXAMPLE If a single bit is described, the BIT-FIELD-COMPUTATION will return 0/1 regardless at which bit position the corresponding bit is defined.

9.5.9 STATE-GRAPH

If the variable represents the states of a state machine the STATE-GRAPH element is used.

A STATE-GRAPH consists of:

— STATES: lists the supported state values of the variable using DATA-DECLARATION-REFs to DATA-DECLARATIONs of DATA-TYPE 'STATE-VALUE'.

— INITIAL-STATE: lists the initial state, using a DATA-DECLARATION-REF to a DATA-DECLARATION of DATA-TYPE 'STATE-VALUE'.

— STATE-TRANSITIONS: Consists of an arbitrary number of STATE-TRANSITIONs, specifying the:

— FROM-STATE (Reference to a DATA-DECLARATION);

— TO-STATE (Reference to a DATA-DECLARATION); and the

— REQUIRED-CONDITION (Reference to a COMPUTATION specifying conditions that shall be fulfilled for the state transition to take place).

— STATE-COMPUTATION: Possibility to specify the computation of the documented state values from the internal values of the state graph variable, if there is no 1:1 mapping between the two (e.g. masking and shifting of dedicated bits, in this case the state graph variable is implemented as a bit field).

NOTE The DATA-DECLARATION-REFs in INITIAL-STATE, FROM-STATE, TO-STATE is listed in the element STATES.

9.6 FAULT-SYMPTOMS

9.6.1 General

This subclause describes FXD-Schema elements specifying fault-symptom-specific information.

NOTE Fault symptoms in a program version supplied by 3rd parties will be described separately (see 9.7).

9.6.2 Element-Id

Key of (fault-symptom-based) description: supplier-specific unique name of the fault symptom described in accordance to section 8.6.

NOTE The SHORT-NAME of the FAULT-SYMPTOM shall correspond to the FAULT-SYMPTOM-NAME of the 'a2l' file

EXAMPLES for SHORT-NAMEs:

— DFC_Agre; and

— PVS_DRIFT.

© ISO 2018 – All rights reserved
Documents
Document Sharing Hub
Full document details: BS ISO 22901-3:2018

9.6.3 COMPANY-DATA-REF

This element contains the reference to the company providing the FAULT-SYMPTOM.

9.6.4 ECU-FUNCS

The section specifies the names and the versions of the ECU-FUNCs, contributing to the calculation of the fault symptom. Annex C contains the correct listing of functions/versions.

9.6.4.1 LONG-NAME

This element contains the supplier-specific name of the ECU-FUNC according to the specification of an HDO LONG-NAME as provided in the 'a2l' file.

EXAMPLE DSALSU

9.6.4.2 VERSION

This element contains the version of the ECU-FUNC as given in the 'a2l' element FUNCTION_VERSION for the diagnostic function.

9.6.5 CONFIGURATION

This element contains the references to DATA-DECLARATIONS representing non-calibratable constants ("system constants") which have an influence on the calculation of the described fault symptom.

Additionally, the value of each system constant, shall be given in the corresponding DATA-VALUE element. Further details are contained in Annex C.

9.6.6 FAULT-IDENTIFICATION

9.6.6.1 Legal code

The fault code requested by legislation is provided as a reference to a computation which is either a value, or a label, or a label with indexation that can be given. Table 7 defines the external test equipment FAULT-CODE.

Table 7 — External test equipment FAULT-CODE

Reference to OBD summary table	OBD Fault Code
Format	Implemented as a reference to a computation (COMPUTATION-REF). Thus, the element can contain either a calibration label name or an actual value entered as a decimal value.

9.6.6.2 CUSTOM-CODES

Here, the customer-specific code is provided as a reference to a computation where either a value, or a label, or a label with indexation can be given. In addition to that, the type of the CUSTOM-CODE can be specified in order to enable a distinction between different CUSTOM-CODES. Table 8 defines the service fault code.

Table 8 — Service fault code

Reference to OBD summary table	None
Format	Implemented as a reference to a computation (COMPUTATION-REF). Thus, the element can contain either a calibration label name or an actual value entered as a decimal value.

© ISO 2018 – All rights reserved

Documents
Document Sharing Hub
Full document details: BS ISO 22901-3:2018

9.6.6.3 FAULT-TYPE

Each fault symptom can be allocated to a DTC and, additionally, further distinctive features can be provided for the corresponding fault symptom for the service. The classification of the fault types is regulated in SAE J2012 [3]. Table 9 defines the element FAULT-TYPE.

Table 9 — FAULT-TYPE

Reference to OBD summary table	None
Format	Implemented as a reference to a computation (COMPUTATION-REF). Thus, the element can contain either a calibration label name or an actual value entered as a hexadecimal value.

9.6.7 MON-COMPONENT or system

This element provides a short description of the MON-COMPONENT or system.

EXAMPLE Accelerator Pedal Position Sensor 1.

Table 10 defines the element MON-COMPONENT / system.

Table 10 — MON-COMPONENT/system

Reference to OBD summary table	Component/System
Format	Text field with ASCII characters
SELECTION-LIST-NAME	MON_COMPONENT

9.6.8 FAULT-CLASSIFICATION

This element consists of either an ERR-CLASS or a MIL-RELEVANCE and an additional, optional element MIL-DEBOUNCE-GROUP.

9.6.8.1 ERR-CLASS

This element contains information about the connection between the driver warning (MIL, EPCL/SYS etc.) and the priority.

Table 11 defines the element ERR-CLASS.

Table 11 — ERR-CLASS

Reference to OBD summary table	MIL Illumination
Format	Implemented as a reference to a computation (COMPUTATION-REF). Thus, the element can contain either a calibration label name or an actual value entered as a decimal value.
Additional information	Examples for possible fault classes are: Service fault (NOT OBD-relevant) OBD-relevant faults (with priority "Fault" for the service tester) OBD-relevant faults "Fuel system monitoring" and "Misfire" OBD-relevant faults "Misfire monitoring" [MIL + flashing MIL] Service fault (NOT OBD-relevant) with clearance of service fault as per OBD [service only] OBD-relevant faults with clearance of service fault as per OBD [MIL]

© ISO 2018 – All rights reserved
Documents
Document Sharing Hub
Full document details: BS ISO 22901-3:2018

9.6.8.2 MIL-RELEVANCE

This field contains the information of whether the described FAULT-SYMPTOM should switch the OBD lamp on.

Table 12 defines the element MIL-RELEVANCE fault.

Table 12 — MIL-RELEVANCE fault

Reference to OBD summary table	MIL Illumination
Format	Implemented as a reference to a computation (COMPUTATION-REF). Thus, the element can contain either a calibration label name or an actual value entered as "true" or "false".

9.6.8.3 MIL-DEBOUNCE-GROUP

If shared MIL debouncing becomes necessary for several FAULT-SYMPTOMS with fault memories based purely on FAULT-SYMPTOMS, and if this has been agreed with homologation, these FAULT-SYMPTOMS may be assigned to one MIL group.

Table 13 defines the element MIL DEBOUNCE-GROUP.

Table 13 — MIL-DEBOUNCE-GROUP

Reference to OBD summary table	None
Format	Implemented as a reference to a computation (COMPUTATION-REF). Thus, the element can contain either a calibration label name or an actual value entered as a decimal value.
Additional information	Only if the MIL group is directly hardcoded in the software (program), this dependency has to be described as text. One example of a description: Fuel System Monitoring in the additive and mulitplicative range: FRAmax represents the fault symptoms FRAmax, FRAmin, ORAmax, ORAmin.

9.6.9 RATIO-GROUPS for in-use monitor performance ratio (IUMPR)

For FAULT-SYMPTOMS from component groups that are required to be output as IUMPR via service 0916 in accordance with OBD legislation and which shall be assigned to a specified RATIO-GROUP. The RATIO-GROUP is to be entered from a selection list (see B.3.4). Multiple assignments are supported.

Table 14 defines the element RATIO-GROUP.

© ISO 2018 – All rights reserved

Documents
Document Sharing Hub
Full document details: BS ISO 22901-3:2018

Table 14 — RATIO-GROUP

Reference to OBD summary table	Yes
Format	Implemented as a reference to a computation (COMPUTATION-REF). Thus, the element can contain either a calibration label name or an actual value entered as a decimal value.
SELECTION-LIST-NAME	RATIO_GROUP
Additional information	For all fault symptoms from a ratio group, the lowest IUMPR individual ratio is to be calculated in the control unit and the associated numerator and denominator for this lowest ratio output via service 09. IUMPR individual ratios for fault symptoms that do not have to be output for compliance with OBD legislation, but which are still linked to IUMPR (e.g. purely service-relevant sub-diagnostics on the oxygen sensor) can also be assigned to predefined extended ratio groups (without SAE short identifiers). However, the lowest individual ratio is not calculated. These extended ratio groups serve exclusively for theme-related IUMPR data evaluation.

9.6.10 READINESS-GROUP

Documentation of allocation for FAULT-SYMPTOMS with respect to readiness status (Service 0116, PID 0116) and monitor status (Service 0116, PID 4116). Table 15 defines the element READINESS-GROUP.

Table 15 — READINESS-GROUP

Reference to OBD summary table	None
Format	Implemented as a reference to a computation (COMPUTATION-REF). Thus, the element can contain either a calibration label name or an actual value.
---	For every fault symptom concerned, the associated readiness group is to be entered.
SELECTION-LIST-NAME	READINESS_GROUP

9.6.11 FAULT-DETECTIONS

9.6.11.1 FAULT-DETECTION general information

Since for a given fault symptom multiple strategies to detect a fault may exist, for each of them a separate FAULT-DETECTION shall be provided. In the following, the subelements of a single FAULT-DETECTION are described.

9.6.11.2 Element-Id

Key of fault detection description: supplier specific unique name of the fault detection, described in accordance to section 8.6.

9.6.11.3 MON-STRATEGY

This element provides a rough classification of the underlying fault detection algorithm.

Table 16 defines the element MON-STRATEGY.

Table 16 — MON-STRATEGY

Reference to OBD summary table	Monitor strategy description
Format	Text field with ASCII characters
Additional information	Terms based on the MCL are principally to be used.

© ISO 2018 – All rights reserved
Documents
Document Sharing Hub
Full document details: BS ISO 22901-3:2018

For rationality and functional checks, it should be clear and comprehensible on the basis of the description used how the employed strategy works for the concerned component. It is not enough to simply enter terms such as "rationality check".

Terms are to be used, such as:

— Functional check stuck closed;

— Rationality check unable to open;

— Measurement of OSC compared to OSC of borderline catalyst; and

— CAN communication with gateway, etc.

9.6.11.4 FAULT-DETECTION-CRITERIA

This element contains the description of the fault detection criteria, which is defined as follows:

— The FAULT-DETECTION-CRITERIA is the criterion which "decides" whether a fault is present or not.

— This decision may be preliminary in the sense that a subsequent confirming phase can still be necessary to distinguish between an actual fault and a misdetection. This confirming phase is typically referred to as "debouncing".

— Every condition that has to be fulfilled as a precondition so that the decision can be computed does not belong to the FAULT-DETECTION-CRITERIA. These are enable (or test) conditions.

Annex C contains further details.

Table 17 defines the element FAULT-DETECTION-CRITERIA.

Table 17 — FAULT-DETECTION-CRITERIA

Reference to OBD summary table	Malfunction Criteria / Threshold Value
Format	Implemented as a reference to a computation (COMPUTATION-REF), see 9.4.2.
Additional information	Here, the description of the basic fault symptom detection criterion is provided. The description is to be provided preferably in a formal way by using the sub-element ABSTRACT-SYNTAX. If the complexity of the fault detection criterion exceeds a certain limit, the description may also be provided in the form of a verbal description using the subelement EXPLANATION. The decision between formal and verbal description should be taken on a case by case basis.

9.6.11.5 ENABLE-CONDITIONS

Here, the description of physical enable conditions (or test conditions) for each FAULT-DETECTION-CRITERIA shall be given.

When structuring the description, the definitions (see 3.1) and the ABSTRACT-SYNTAX (see 9.4.2) is to be taken into account. The internal control unit label names are used for the descriptions. If this is not the case, the terms specified in SAE J1930-DA are principally to be used. Table 18 defines the element ENABLE-CONDITIONS.

Definition of ENABLE-CONDITIONS:

— Every condition, that has to be fulfilled as a precondition, (once or during the complete calculation of the fault detection criterion) that the fault detection criterion can be computed is an enable (or test) condition;

© ISO 2018 – All rights reserved

Documents
Document Sharing Hub
Full document details: BS ISO 22901-3:2018

— An atomic enable condition can typically be presented in the form: "Label simple comparison operator threshold"; and

— Single atomic enable conditions can be combined by further operators, such as "AND","OR" etc.

Table 18 — ENABLE-CONDITIONS

Reference to OBD summary table	secondary parameters / enable conditions		
Format	Implemented as a reference to a computation (COMPUTATION-REF), see 9.4.2.		
Additional Information	Here, the conditions are described that have to be fulfilled in order to enable the computation of the fault detection criterion. The following conditions have similar effects as enable conditions; however, they are to be listed in separate elements since they are used for controlling and filtering in the subsequent document processing.		
	Element	**Calibration**	**Effects**
	CENTRAL-CALIBRATION-INFORMATION (9.6.1.2)	Central	Monitoring function is active. Fault code management is inhibited.
	DISABLE-FULLY (9.6.11.14)	Decentral	Monitoring function is not active.
	DISABLE-REPORT-ONLY (9.6.11.13)	Decentral	Monitoring function is active. Fault code management is inhibited.
	Enable conditions that are managed using sequential control (between engine and monitoring functions shall be documented exclusively in the element EXCLUSION (9.6.13.2).		

9.6.11.6 Debounce information for fault detection

Brief description of the debounce process, taking the applied “program parameters” into account. The applied “program parameters” are displayed by means of a referencing process, for which a value, a label, or a label with textual description is used (see Figure 10).

9.6.11.7 FAULT-DEBOUNCE

The Debounce Time refers to the time period between the time when the fault is detected and the time when the fault is stored in the fault memory. This applies to a defective component.

Marginal conditions:

This applies to a neutral system, i.e. no adaptations had taken place within the preceding driving cycles (neither positive nor negative) before the defective component to be monitored was installed. Furthermore, the defective component to be monitored produces a fault value that has exactly the value necessary, and is thus just large enough for the monitor to detect a fault (neither lower nor higher).

Table 19 defines the element FAULT-DEBOUNCE.

© ISO 2018 – All rights reserved
Documents
Document Sharing Hub
Full document details: BS ISO 22901-3:2018

Table 19 — FAULT-DEBOUNCE

Reference to OBD summary table	Fault Debouncing Length
Format	Implemented as a reference to a computation (COMPUTATION-REF).
Additional information	Here, the control unit supplier is expected to submit a proposal in an XML structure describing the complete debouncing method and which can also be integrated into an ODX container. This refers to the debouncing process starting with the fulfillment of the FAULT-DETECTION-CRITERIA. EXAMPLE: time-based debouncing, incident-based debouncing, etc. The vehicle manufacturer will be responsible for simplifying the homologation documents. In English, only the terms agreed with the homologation officials are to be used for this description of fault debouncing (specification in Master Summary Table from homologation).

Figure 10 shows the calculation of the monitoring time length.

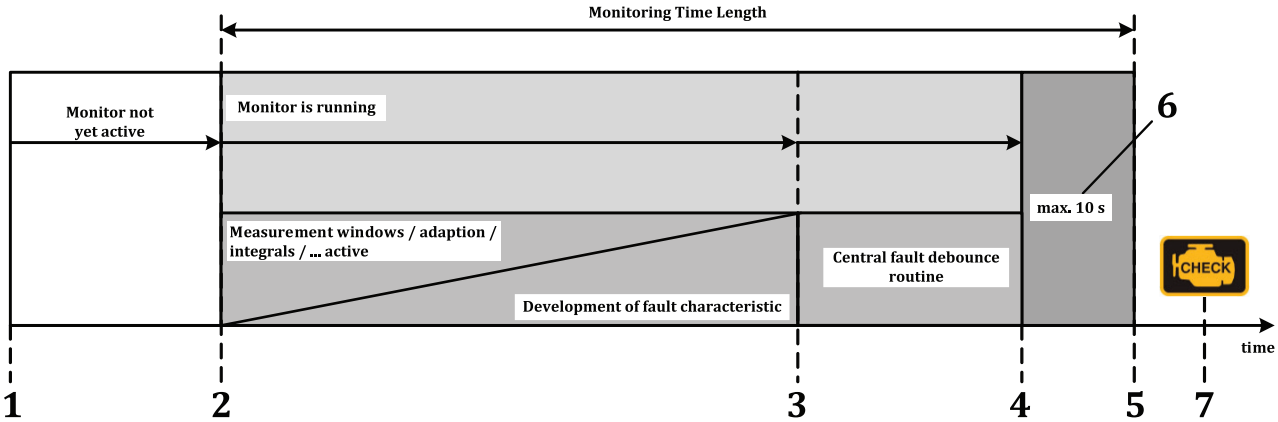

Key

1 defective component installed
2 monitor start
3 fault detected
4 fault detected and debounced
5 updates: OBD modes, IUMPR, fault memory, ...
6 Maximum time period to store the fault in the fault memory (FCM) in accordance with applicable OBD legislation
7 Pending / MIL

Figure 10 — Determination of the monitoring time length

9.6.11.8 MON-FREQUENCY

The supplier delivers the raw information as a proposal and the vehicle manufacturer applies the information e.g. for the summary sheets according to the calibration data.

A list of possible values will be provided as defined in Annex B.

Table 20 defines the element MON-FREQUENCY.

© ISO 2018 – All rights reserved

Documents
Document Sharing Hub
Full document details: BS ISO 22901-3:2018

Table 20 — MON-FREQUENCY

Reference to OBD summary table	Frequency of Checks
Format	Text field with ASCII characters
SELECTION-LIST-NAME	MON_FREQUENCY
—	A defined term entered by the supplier for the OBD summary table in accordance with the specification in the Master OBD summary table from homologation (see Additional information).
—	For vehicle manufacturers, an additional description element is required in order to enter valuable information for service.

Definition of the monitoring frequency

On a functional level, the monitoring frequency describes the most frequent execution of a diagnostic functionality, e.g. a diagnostic monitor that the ECU software is capable of.

On the level of a concrete application, the monitoring frequency describes the actual behaviour of the functionality on this application. In the following the term monitor refers to one specific FAULT-DETECTION.

For the assessment of the monitoring frequency, all prerequisites are taken into account, especially values calculated in other functions, which are used as part of the diagnostic monitor.

Example

A diagnostic monitor has a set of parameters influencing the monitoring frequency:

"number of times for which the monitor is executed in one dcy"

"delay time of the monitor after monitoring result"

With these two parameters, the diagnostic monitor could be tuned to anything between continuous and once.

Continuous

"number of times for which the monitor is executed in one dcy" = FF (infinitive),

"delay time of the monitor after monitoring result" = 0.

Once

"number of times for which the monitor is executed in one dcy" = 1,

"delay time of the monitor after monitoring result" = FF (infinitive).

Definition

Once per ECU lifetime

The monitor is usually executed only once per ECU lifetime. This may be a check during production of the ECU or during production of the vehicle.

Once per driving cycle

Regardless how many times the enable conditions of a monitor are met during a driving cycle, the monitor only runs once and reports the pass/fail decision to the fault code memory only once.

Figure 11 illustrates how the monitoring cycle is processed if run once.

NOTE 1 This is just an example.

© ISO 2018 – All rights reserved
Documents
Document Sharing Hub
Full document details: BS ISO 22901-3:2018

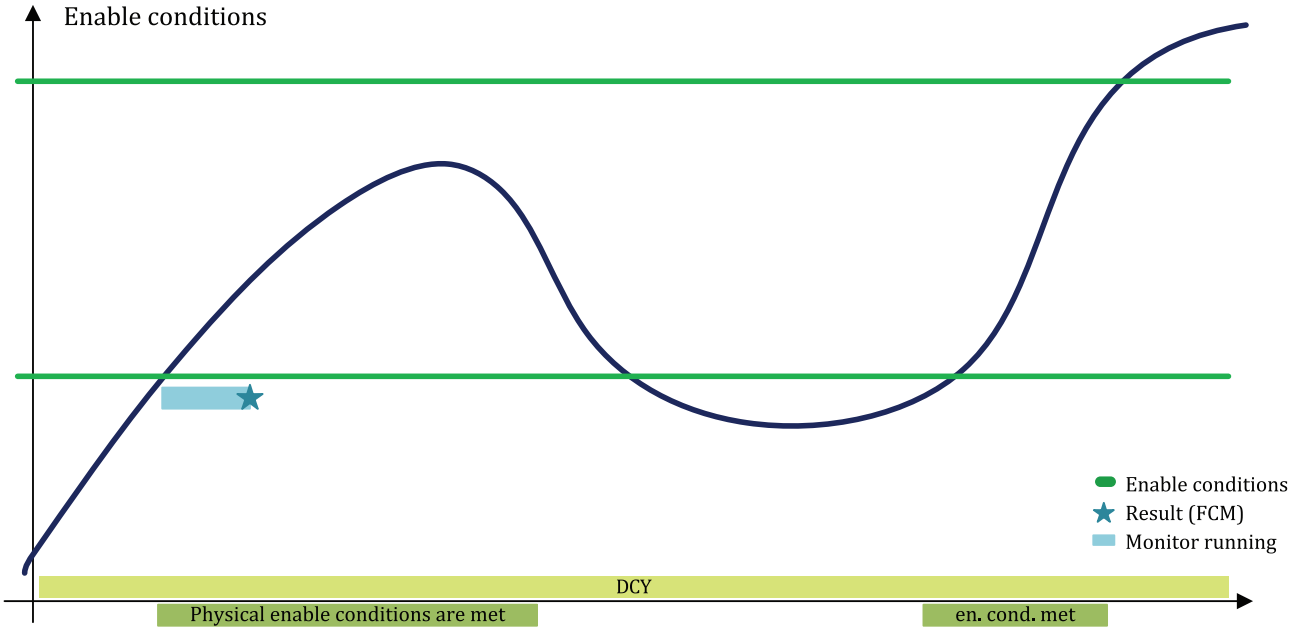

Figure 11 — Definition Once per driving cycle

Continuous

Every time the enable conditions of a monitor are met, the diagnostic monitor is executed immediately. After the time necessary to execute the diagnostic monitor and report to fault code memory, the monitor is executed again.

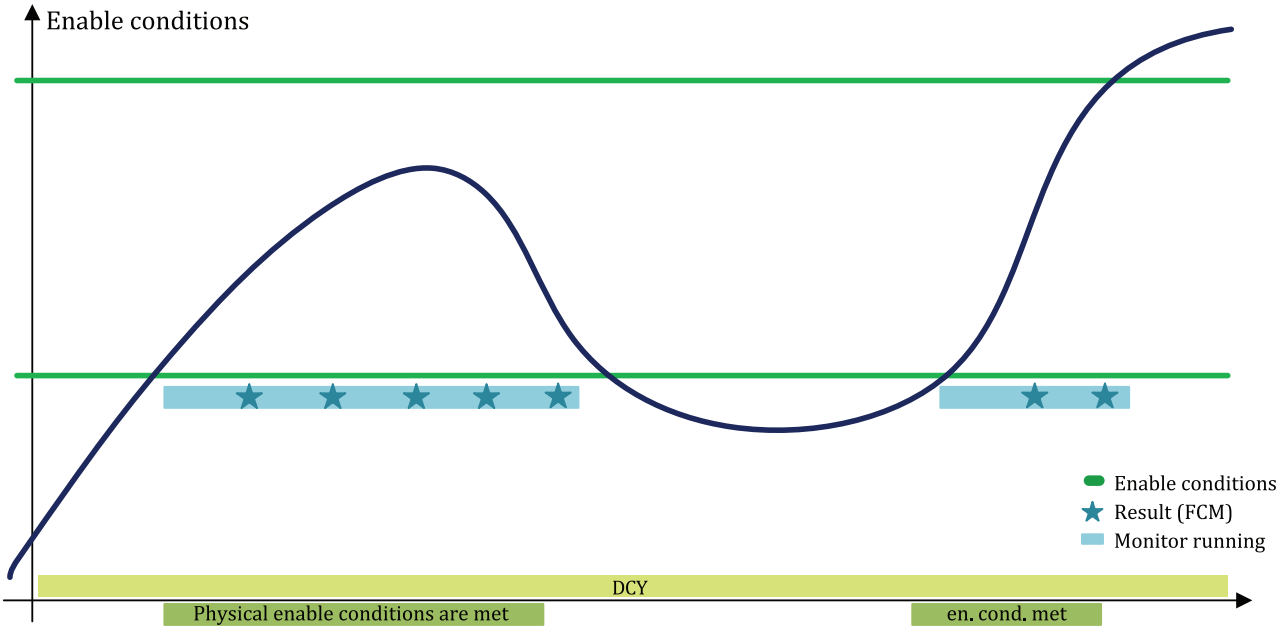

Figure 12 — Definition Continuous

Figure 12 illustrates how the monitoring cycle is processed if continusously monitored.

NOTE 2 This is just an example.

Multiple

The diagnostic monitor is executed more than once in a driving cycle.

© ISO 2018 – All rights reserved

Documents
Document Sharing Hub
Full document details: BS ISO 22901-3:2018

Each time the enable conditions are met, the monitor produces at least one pass fail decision but does not run continuously.

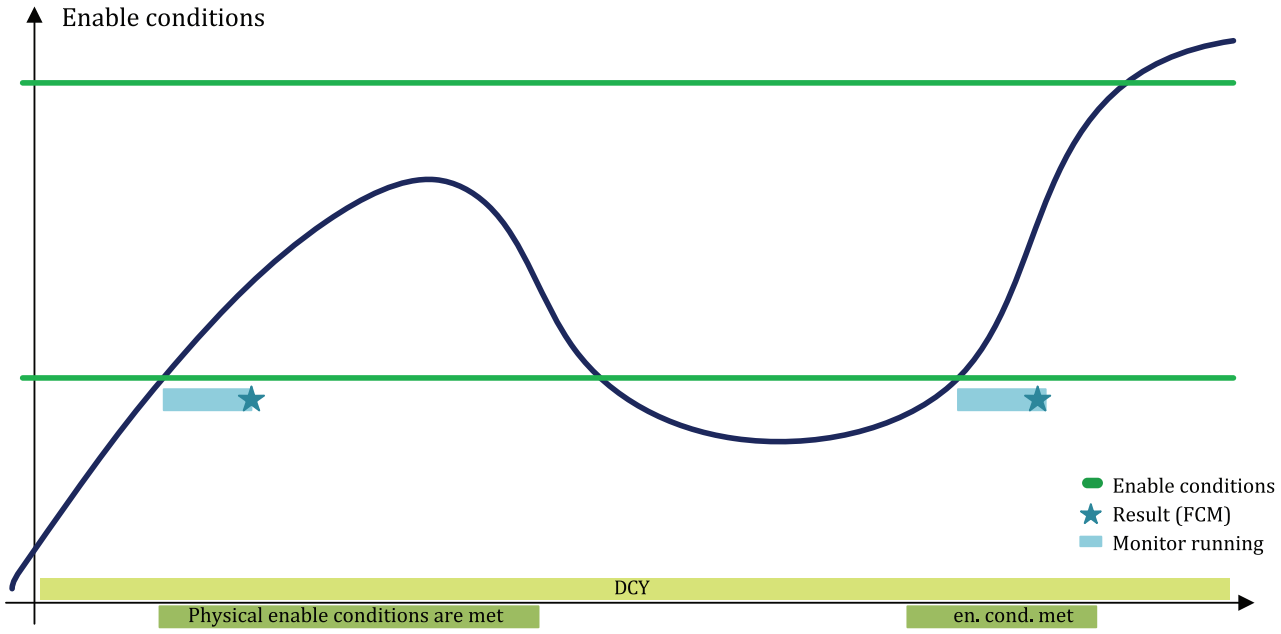

Figure 13 — Definition Multiple

Figure 13 illustrates how the monitoring cycle is processed if multiple definitions of monitoring apply.

NOTE 3 This is just an example.

9.6.11.9 OK-DETECTION-CRITERIA

This element provides the description of the OK detection algorithm by referencing a COMPUTATION. For details on COMPUTATIONS, see 9.4.2.

Definition of OK-DETECTION-CRITERIA:

— The OK-DETECTION-CRITERIA is the criterion which "decides", whether healing is present or not.

— This decision may be preliminary in the sense that a subsequent confirming phase can still be necessary to distinguish between actual healing and misdetection. This confirming phase is typically referred to as "debouncing".

— Every condition that has to be fulfilled as a precondition so that the decision can be computed does not belong to the OK-DETECTION-CRITERIA. These are enable (or test) conditions for fault healing.

Table 21 defines the element OK-DETECTION-CRITERIA.

© ISO 2018 – All rights reserved
Documents
Document Sharing Hub
Full document details: BS ISO 22901-3:2018

Table 21 — OK-DETECTION-CRITERIA

Reference to OBD summary table	none
Format	Implemented as a reference to a computation (COMPUTATION-REF), see 9.4.2.
Additional information	Here, the description of the basic fault symptom healing detection criterion is indicated. The description is to be provided preferably in a formal way by using the sub-element ABSTRACT-SYNTAX. If the complexity of the fault detection criterion exceeds a certain limit, the description may also be provided in the form of a verbal description using the subelement EXPLANATION. The decision between formal and verbal description should be taken on a case by case basis.

9.6.11.10 OK-ENABLE-CONDITIONS

Description of physical enable conditions/test conditions for healing.

This is an element which shall be used only in case a diagnostic monitor is asymmetric with respect to enable conditions (i.e. if the enable conditions for healing detection are differing from the enable conditions for fault detection).

When structuring the description, the definitions (see 3.1) and the ABSTRACT-SYNTAX (see 9.4.2) is to be taken into account. The internal control unit label names are used for the descriptions. If this is not the case, the terms specified in SAE J1930-DA are principally to be used defines the enable conditions.

Definition of enable conditions for healing:

Every condition that has to be fulfilled as a precondition (once or during the complete calculation of the healing detection criterion) that the healing detection criterion can be computed is an enable (or test) condition.

— An atomic enable condition can typically be presented in the form: "Label simple comparison operator threshold".

— Single atomic enable conditions can be combined by further operators, such as "AND","OR" etc.

— Table 22 defines the element OK-ENABLE-DETECTION.

Table 22 — OK-ENABLE-DETECTION

Reference to OBD summary table	none
Format	Implemented as a reference to a computation (COMPUTATION-REF), see 9.4.2.
Additional Information	Here, the conditions that have to be fulfilled in order to enable the computation of the healing detection criterion are described.

9.6.11.11 OK-DEBOUNCE

Brief description of the debounce for the OK detection, taking the applied "program parameters" (see) into account. The applied “program parameters” are displayed by means of a referencing process, for which a value, a label, or a label with textual description is used (see Figure 10).

Table 23 — OK-DEBOUNCE

Reference to OBD summary table	None
Format	Implemented as a reference to a computation (COMPUTATION-REF).

© ISO 2018 – All rights reserved

Documents
Document Sharing Hub
Full document details: BS ISO 22901-3:2018

9.6.11.12 Reference to OBD legislation

9.6.11.12.1 General

This element is needed for OBD relevant fault symptoms and will be omitted for others. This element contains a reference to the part of legislation that initiated the introduction or change of the fault symptom and will be provided by the supplier.

9.6.11.12.2 LEGISLATIONS

The LEGISLATION reference shall be provided as a text field with ASCII characters. The content of the text field shall be the section numbering of the regulation and its detail.

EXAMPLE

LAW CCR 1968.2

SECTION (e)(11.2.1)(A)

Here, no update will be expected for the life time of the software, only in the event that new features were introduced which will - as a rule - lead to another symptom name, should the new section of LEGISLATION be stated. Table 24 defines the reference to OBD LEGISLATION.

Table 24 — LEGISLATION

Reference to OBD summary table	MCL
Format	Text field with ASCII characters
—	The additional, optional XML element receives the name MCL-STRATEGY
Additional information	This information is the first step towards generating a list of MONITORING REQUIREMENTS, which illustrates the connection between component, section of legislation and SAE J2012-DA code. The assignment "Name of fault symptom" to fault code is performed by the vehicle manufacturer using data.

9.6.11.12.3 MCL-STRATEGY

This information is necessary for all OBD-relevant comprehensive components and contains a generic description of the FAULT-DETECTION-STRATEGY of the FAULT-SYMPTOM. The terminology to be used is listed in a Selection List (in accordance with Annex B). Table 25 defines the element MCL-STRATEGY.

Table 25 — MCL-STRATEGY

Reference to OBD summary table	MCL
Format	Text field with ASCII characters
SELECTION-LIST-NAME	MCL_STRATEGY

9.6.11.13 DISABLE-REPORT-ONLY

Inactive conditions shall be distinguished from physical enable conditions, since inactive conditions:

— cannot change during ECU-runtime (rather they are typically fixed by the engineering calibration process); and

— will be used for control of further documentation processing.

This element provides the description of function-internally defined conditions that have to be fulfilled so that the fault detection is deactivated.

In DISABLE-REPORT-ONLY, inactive conditions shall be described that deactivate error reports to fault storage memory only, whereas the calculation of the diagnostic algorithm is not deactivated.

© ISO 2018 – All rights reserved
AVA Documents Document Sharing Hub
Full document details: BS ISO 22901-3:2018

The description is implemented by a reference to a COMPUTATION. For details on COMPUTATIONS, see 9.4.2. Table 26 defines the element DISABLE-REPORT-ONLY.

Table 26 — DISABLE-REPORT-ONLY

Reference to OBD summary table	Inactive conditions shall not appear in the OBD summary table
Format	Implemented as a reference to a computation (COMPUTATION-REF). Thus, the element can contain either a calibration label name (Abstract-Syntax) or an actual value entered as a decimal value.
Additional information	Enter here which conditions have to be fulfilled to deactivate fault reporting. This point is not to be confused with 9.6.12 CENTRAL-CALIBRATION-INFO. In both cases, fault output is suppressed, however, in this case, the function itself, not a central label, suppresses the fault report.

9.6.11.14 DISABLE-FULLY

Inactive conditions shall be distinguished from physical enable conditions, since inactive conditions:

— cannot change during ECU-runtime (rather they are typically fixed by the engineering calibration process); and

— will be used for control of further documentation processing.

This element provides the description of function internally defined conditions that have to be fulfilled so that the fault detection is deactivated.

In DISABLE-FULLY, inactive conditions shall be described that deactivate the calculation of the diagnostic algorithm, so that no error will be reported to fault storage memory.

The description is implemented by a reference to a COMPUTATION. For details on COMPUTATIONS, see 9.4.2. Table 27 defines the element DISABLE-FULLY.

Table 27 — DISABLE-FULLY

Reference to OBD summary table	Inactive conditions shall not appear in the OBD summary table
Format	Implemented as a reference to a computation (COMPUTATION-REF). Thus, the element can contain either a calibration label name (Abstract Syntax) or an actual value entered as a decimal value.
Additional information	Enter here which conditions have to be fulfilled to deactivate the calculation of the diagnostic algorithm, so that no error will be reported to fault storage memory.

9.6.11.15 OBD service 0616 information

To enable reuse for this information, one or more specific elements in the OBD service 0616-list — Request on-board monitoring test results for specific monitored systems, as defined in ISO 15031-5, are referenced. For a detailed description of OBD service 0616 information, see 8.8. This information will be indicated for OBD service 0616 relevant fault symptoms only.

9.6.11.16 GENERIC-TYPE

This element contains the information, which type of diagnostic the fault symptom belongs to.

The following values are supported:

— COMMUNICATION;

— ELECTRICAL; and

© ISO 2018 – All rights reserved

Documents
Document Sharing Hub
Full document details: BS ISO 22901-3:2018

— OTHER DIAGNOSIS.

Table 28 defines the element GENERIC-TYPE.

Table 28 — GENERIC-TYPE

Reference to OBD summary table	None
Format	Text field with ASCII characters
Attribute	Use case
SELECTION-LIST-NAME	GENERIC_TYPE

Description of the supported standard values:

COMMUNICATION: the fault symptom detects communication error between 2 ECUs or between 1 ECU and an intelligent component.

ELECTRICAL: the fault symptom detects electrical errors that are continuously monitored or not continuously monitored; further detailed classification regarding the monitoring frequency can be generated using the already existing element – MON-FREQUENCY-

OTHER DIAGNOSIS: the fault symptom detects errors that are not electrical or of communication kind.

9.6.12 CENTRAL-CALIBRATION-INFOS

This element provides central calibration labels that affect the behaviour of fault-symptom-related software (and thus the behaviour of the fault symptom itself).

Here, central means provided by a central service functionality (e.g. fault symptom manager) for all fault symptoms in a program version, in contrast to calibration labels locally defined in specific software functions.

These central calibration labels, although they state an enable condition from the logical point of view, shall not be listed as part of the general enable conditions (see 9.6.11.5 ENABLE-CONDITIONS) since they do not represent a physical enable condition (i.e. their value will not change during ECU runtime) and will be used for control of further documentation processing.

The element COMPUTATION-REF contains the label information, i.e. the name of the calibration label, whereas the element INFO-TYPE contains information about the type of the information.

Since the calibration labels described here will mostly be supplier-specific, the INFO-TYPE values will also be supplier-specific. The following symptom characteristics are typically determined by the central calibration:

— Activation/Deactivation of the fault symptoms;

— Configuration/Setting of the initialisation behaviour;

— Suppression of the monitor during defined operating conditions;

— Control of the fault memory output (master/slave control unit);

— Settings regarding central fault-debounce mechanisms; etc.

If more than one calibration labels are used by the supplier, they are all to be listed.

Table 29 defines the element CENTRAL-CALIBRATION-INFO.

© ISO 2018 – All rights reserved
Documents
Document Sharing Hub
Full document details: BS ISO 22901-3:2018