BS ISO 23223:2025

BSI Standards Publication

Alpine ski boots with improved walking soles — Interface with alpine ski-bindings — Requirements, test methods and marking

Documents
Document Sharing Hub

Full document details: BS ISO 23223:2025

National foreword

This British Standard is the UK implementation of ISO 23223:2025. It supersedes BS ISO 23223:2021, which is withdrawn.

The UK participation in its preparation was entrusted to Technical Committee SW/136, Sports, playground and other recreational equipment.

A list of organizations represented on this committee can be obtained on request to its committee manager.

Contractual and legal considerations

This publication has been prepared in good faith, however no representation, warranty, assurance or undertaking (express or implied) is or will be made, and no responsibility or liability is or will be accepted by BSI in relation to the adequacy, accuracy, completeness or reasonableness of this publication. All and any such responsibility and liability is expressly disclaimed to the full extent permitted by the law.

This publication is provided as is, and is to be used at the recipient's own risk.

The recipient is advised to consider seeking professional guidance with respect to its use of this publication.

This publication is not intended to constitute a contract. Users are responsible for its correct application.

© The British Standards Institution 2025
Published by BSI Standards Limited 2025

ISBN 978 0 539 29181 0

ICS 97.220.20

Compliance with a British Standard cannot confer immunity from legal obligations.

This British Standard was published under the authority of the Standards Policy and Strategy Committee on 28 February 2025.

Amendments/corrigenda issued since publication

Date	Text affected

Documents
Document Sharing Hub

Full document details: BS ISO 23223:2025

International Standard

ISO 23223

Second edition
2025-02

Alpine ski boots with improved walking soles — Interface with alpine ski-bindings — Requirements, test methods and marking

Chaussures de ski pour skis alpins dotées de semelles de marche améliorées — Zone de contact avec les fixations de ski alpin — Exigences, méthodes d'essai et marquage

Reference number
ISO 23223:2025(en)

© ISO 2025

Documents
Document Sharing Hub

Full document details: BS ISO 23223:2025

COPYRIGHT PROTECTED DOCUMENT

© ISO 2025

All rights reserved. Unless otherwise specified, or required in the context of its implementation, no part of this publication may be reproduced or utilized otherwise in any form or by any means, electronic or mechanical, including photocopying, or posting on the internet or an intranet, without prior written permission. Permission can be requested from either ISO at the address below or ISO's member body in the country of the requester.

ISO copyright office
CP 401 • Ch. de Blandonnet 8
CH-1214 Vernier, Geneva
Phone: +41 22 749 01 11
Email: copyright@iso.org
Website: www.iso.org

Published in Switzerland

Documents
Document Sharing Hub
Full document details: BS ISO 23223:2025

Contents

Page

Foreword ..... **iv**

1 Scope **1**

2 Normative references **1**

3 Terms and definitions **1**

4 Requirements and test methods **2**

4.1 General 2

4.2 Dimensions and evenness 2

4.2.1 Dimensions 2

4.2.2 Evenness 8

4.3 Design 10

4.3.1 Sole length 10

4.3.2 Symmetry 10

4.3.3 Side walls 10

4.3.4 Free spaces 14

4.3.5 Bearing surfaces 21

4.3.6 Interfaces 29

4.3.7 Style of boot shell 33

4.3.8 Mounting point 33

4.3.9 Sole length 34

5 Marking **34**

6 Information supplied by the manufacturer **34**

6.1 General 34

6.2 User manual 34

Annex A (informative) **Mondopoint system ski-boot sizing and marking** **36**

Annex B (informative) **Dimensions and requirements of "2nd degree"** **37**

Annex C (normative) **Test gauge for dimensional check** **39**

Bibliography **41**

© ISO 2025 – All rights reserved

Documents
Document Sharing Hub

Full document details: BS ISO 23223:2025

Foreword

ISO (the International Organization for Standardization) is a worldwide federation of national standards bodies (ISO member bodies). The work of preparing International Standards is normally carried out through ISO technical committees. Each member body interested in a subject for which a technical committee has been established has the right to be represented on that committee. International organizations, governmental and non-governmental, in liaison with ISO, also take part in the work. ISO collaborates closely with the International Electrotechnical Commission (IEC) on all matters of electrotechnical standardization.

The procedures used to develop this document and those intended for its further maintenance are described in the ISO/IEC Directives, Part 1. In particular, the different approval criteria needed for the different types of ISO documents should be noted. This document was drafted in accordance with the editorial rules of the ISO/IEC Directives, Part 2 (see www.iso.org/directives).

ISO draws attention to the possibility that the implementation of this document may involve the use of (a) patent(s). ISO takes no position concerning the evidence, validity or applicability of any claimed patent rights in respect thereof. As of the date of publication of this document, ISO had received notice of (a) patent(s) which may be required to implement this document. However, implementers are cautioned that this may not represent the latest information, which may be obtained from the patent database available at www.iso.org/patents. ISO shall not be held responsible for identifying any or all such patent rights.

Any trade name used in this document is information given for the convenience of users and does not constitute an endorsement.

For an explanation of the voluntary nature of standards, the meaning of ISO specific terms and expressions related to conformity assessment, as well as information about ISO's adherence to the World Trade Organization (WTO) principles in the Technical Barriers to Trade (TBT), see www.iso.org/iso/foreword.html.

This document was prepared by Technical Committee ISO/TC 83, *Sports and other recreational facilities and equipment*, Subcommittee SC 4, *Snowsports equipment*.

This second edition cancels and replaces the first edition (ISO 23223:2021) and the corrected version 2022-10, which have been technically revised.

The main changes are as follows:

— new Figures 22 and 23 were added for better explanation of the tests described in 4.3.5.4.3;

— a reference plane (in Figure 1 and Figure 3 and Figure C.1 and Figure C.2) was defined;

— changes in some dimensions of heel area of boot type C in Figure 3 and in Figure 19 were made;

— changes in some dimensions/tolerances in Figure 11 were made;

— 6.1 was modified, mentioning information by the manufacturer in digital version;

— former Annex C was deleted (former Annex D is now Annex C).

Any feedback or questions on this document should be directed to the user's national standards body. A complete listing of these bodies can be found at www.iso.org/members.html.

© ISO 2025 – All rights reserved

Documents
Document Sharing Hub
Full document details: BS ISO 23223:2025

Alpine ski boots with improved walking soles — Interface with alpine ski-bindings — Requirements, test methods and marking

1 Scope

This document specifies requirements, test methods and marking for alpine ski-boots with improved walking soles that are used with systems of alpine ski-bindings for improved walking soles with attachment at the boot front and boot rear, the proper release function of which depends on the dimensions and design of the interfaces.

Alpine ski boots with improved walking soles are intended to a better walkability without affecting the function of the alpine ski binding designed for improved walking soles.

This document is applicable to ski-boots of sizes 15,0 and larger [Types A (Adults) and C (Children)] in the Mondopoint system (see Annex A).

2 Normative references

The following documents are referred to in the text in such a way that some or all of their content constitutes requirements of this document. For dated references, only the edition cited applies. For undated references, the latest edition of the referenced document (including any amendments) applies.

ISO 527-1, *Plastics — Determination of tensile properties — Part 1: General principles*

ISO 527-2, *Plastics — Determination of tensile properties — Part 2: Test conditions for moulding and extrusion plastics*

ISO 554, *Standard atmospheres for conditioning and/or testing — Specifications*

ISO 868, *Plastics and ebonite — Determination of indentation hardness by means of a durometer (Shore hardness)*

ISO 1183-1, *Plastics — Methods for determining the density of non-cellular plastics — Part 1: Immersion method, liquid pycnometer method and titration method*

ISO 1183-2, *Plastics — Methods for determining the density of non-cellular plastics — Part 2: Density-gradient column method*

ISO 1183-3, *Plastics — Methods for determining the density of non-cellular plastics — Part 3: Gas pycnometer method*

ISO 2039-1, *Plastics — Determination of hardness — Part 1: Ball indentation method*

3 Terms and definitions

For the purposes of this document, the following terms and definitions apply.

ISO and IEC maintain terminology databases for use in standardization at the following addresses:

— ISO Online browsing platform: available at https://www.iso.org/obp

— IEC Electropedia: available at https://www.electropedia.org/

© ISO 2025 – All rights reserved

Documents
Document Sharing Hub
Full document details: BS ISO 23223:2025

3.1
interface
part of the ski-boot intended to be in contact with the ski-binding

3.2
front interface
part of the ski-boot intended to be in contact with the front binding

3.3
rear interface
part of the ski-boot intended to be in contact with the rear binding

3.4
free space
space intended to avoid contact between ski-boot and binding, especially during step in/step out or release

3.5
bearing surfaces
front and rear surfaces of the boot sole that are in contact with the ski binding

3.6
median plane
middle plane of the sole, longitudinal and perpendicular to the bearing surface

3.7
ski-brake
device to stop the ski after release of the binding

3.8
walking sole
sole with hard and soft materials and an optimized profile, intended to a better walkability without affecting the function of the alpine ski binding

3.9
low-friction zone
area of the bearing surfaces that has a low-friction coefficient

4 Requirements and test methods

4.1 General

If no specific test method is indicated, check the characteristics as appropriate, e.g. by measurement.

If not otherwise indicated, execute the testing under standard atmosphere 23/50 in accordance with ISO 554 with ordinary tolerances.

4.2 Dimensions and evenness

4.2.1 Dimensions

The boot toe and heel shall conform with Figure 1, Figure 2, Figure 3, Figure 4 and Figure 5.

All dimensions shall be within the indicated tolerances. However, relevance to safety varies in importance depending on the indicated dimensions.

Measurements in gauge shall be done with a preload of 100 N for Type A and 50 N for Type C, by inserting a steel cylinder into the ski-boot itself.

© ISO 2025 – All rights reserved

Documents
Document Sharing Hub
Full document details: BS ISO 23223:2025

Looking at several dimensions (for dimensions of the 2nd degree, see Annex B) a deviation from the tolerances may be accepted, provided that the following requirements are respected:

a) No limitations of function shall arise with all marketable and critical bindings.

b) The tolerances shall be respected at the next possible chance (e.g. reconstruction of a tool).

Dimensions for boots with inserts working with pin bindings are given in this document.

© ISO 2025 – All rights reserved

Documents
Document Sharing Hub
Full document details: BS ISO 23223:2025

Dimensions in millimetres

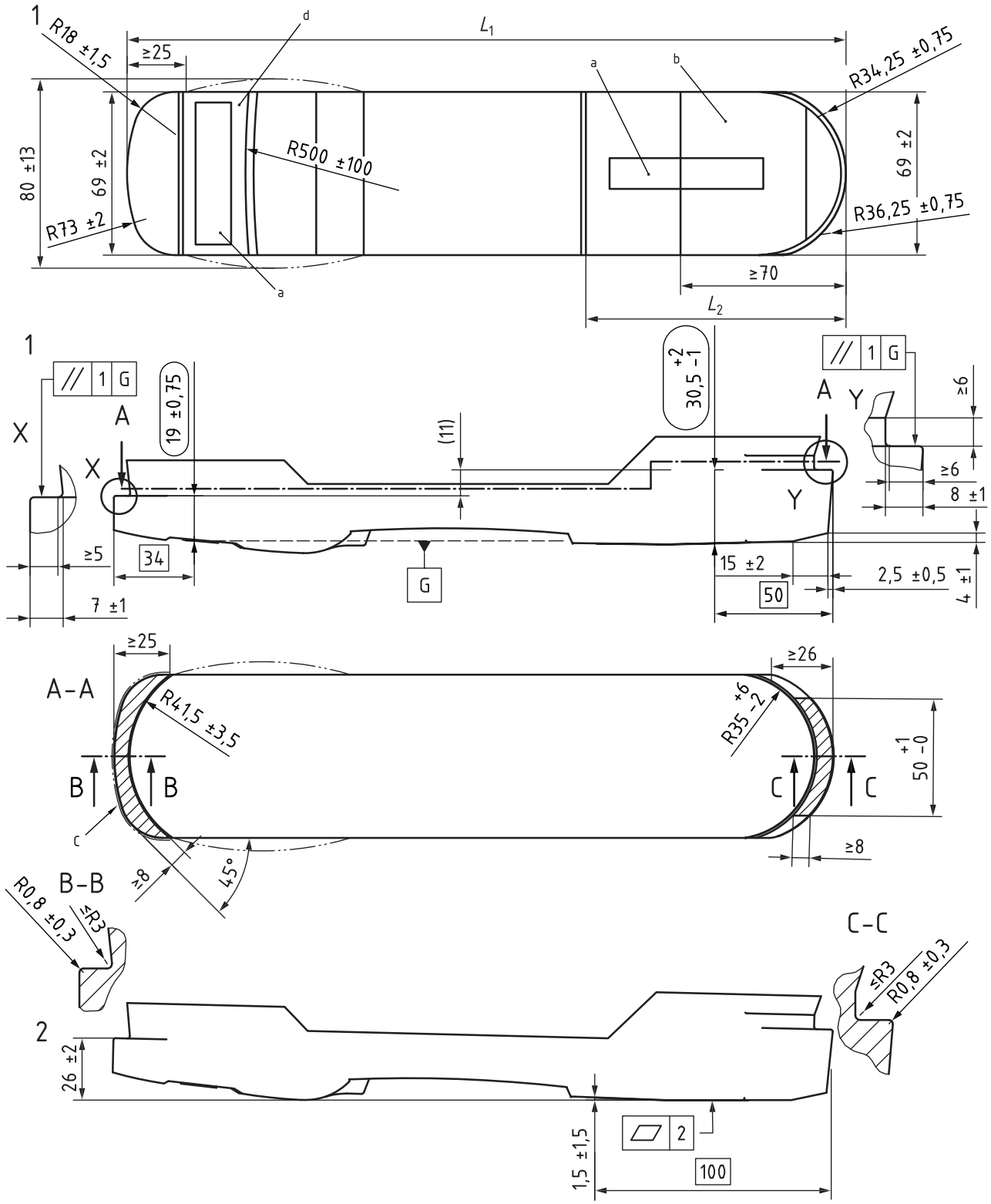

Key

1 position: in gauge

2 position: flat on table

G reference plane (see Figure C.1)

L_1 sole length

L_2 heel length

a Low-friction zone in accordance with 4.3.5.1.

© ISO 2025 – All rights reserved

Documents
Document Sharing Hub
Full document details: BS ISO 23223:2025

b Bearing surface.

c Area in which the tolerance of perpendicularity is valid (see 4.3.3.1).

d Section of recessed soft component not in contact with the binding.

NOTE 1 Shaded areas, including areas with index c, are those in which the tolerances of evenness and the dimensions 19 ± 0,75 and $30{,}5^{+2}_{-1}$ are valid.

NOTE 2 (11) is the vertical distance between shaded areas for construction purposes according to ISO 5355.

L_1	< 300	≥ 300
L_2	≥ 100	≥ 110

Figure 1 — Dimensions of boot toe and heel, Type A

Figure 2 provides all the key dimensions (nominal) to build new boots. The gauge (see Annex C) can be used to check whether a boot is in conformity with this document.

Dimensions in millimetres

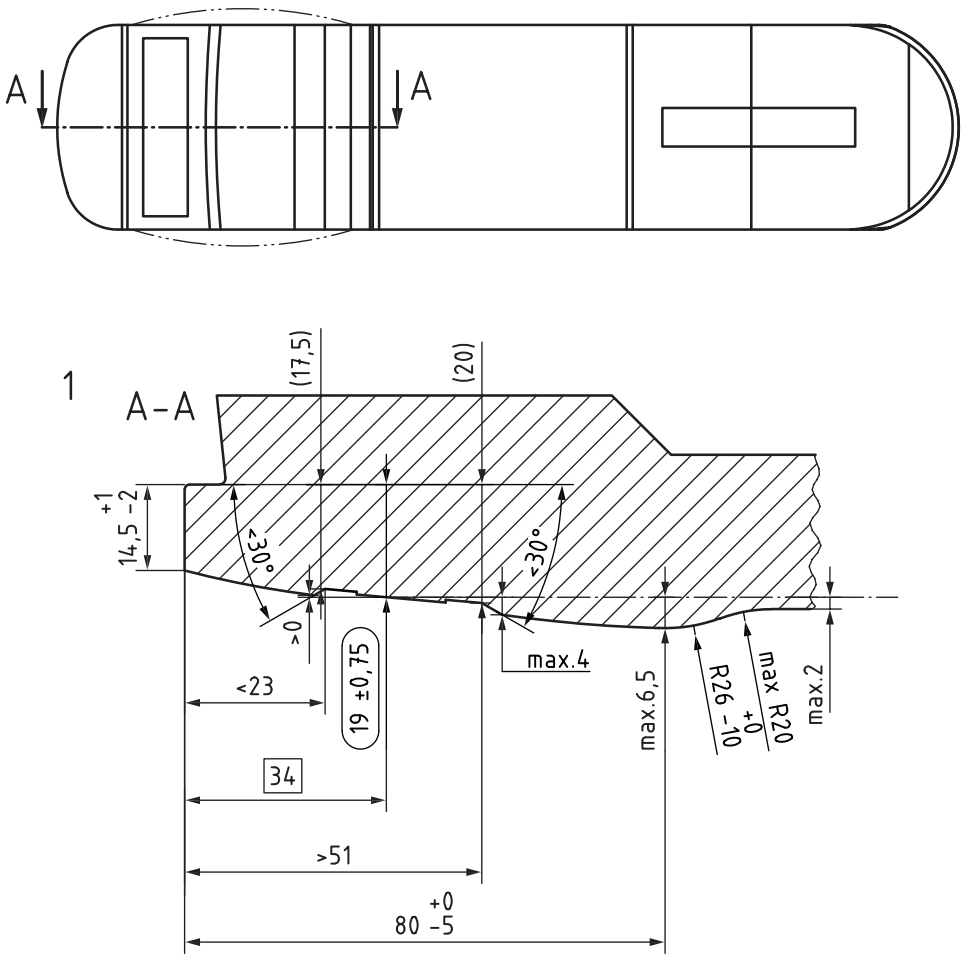

Key

1 position: in gauge

NOTE Some of these measurements are of 2nd degree, see Annex B.

Figure 2 — Detailed dimensions of boot, Type A

© ISO 2025 – All rights reserved

Documents
Document Sharing Hub
Full document details: BS ISO 23223:2025

Dimensions in millimetres

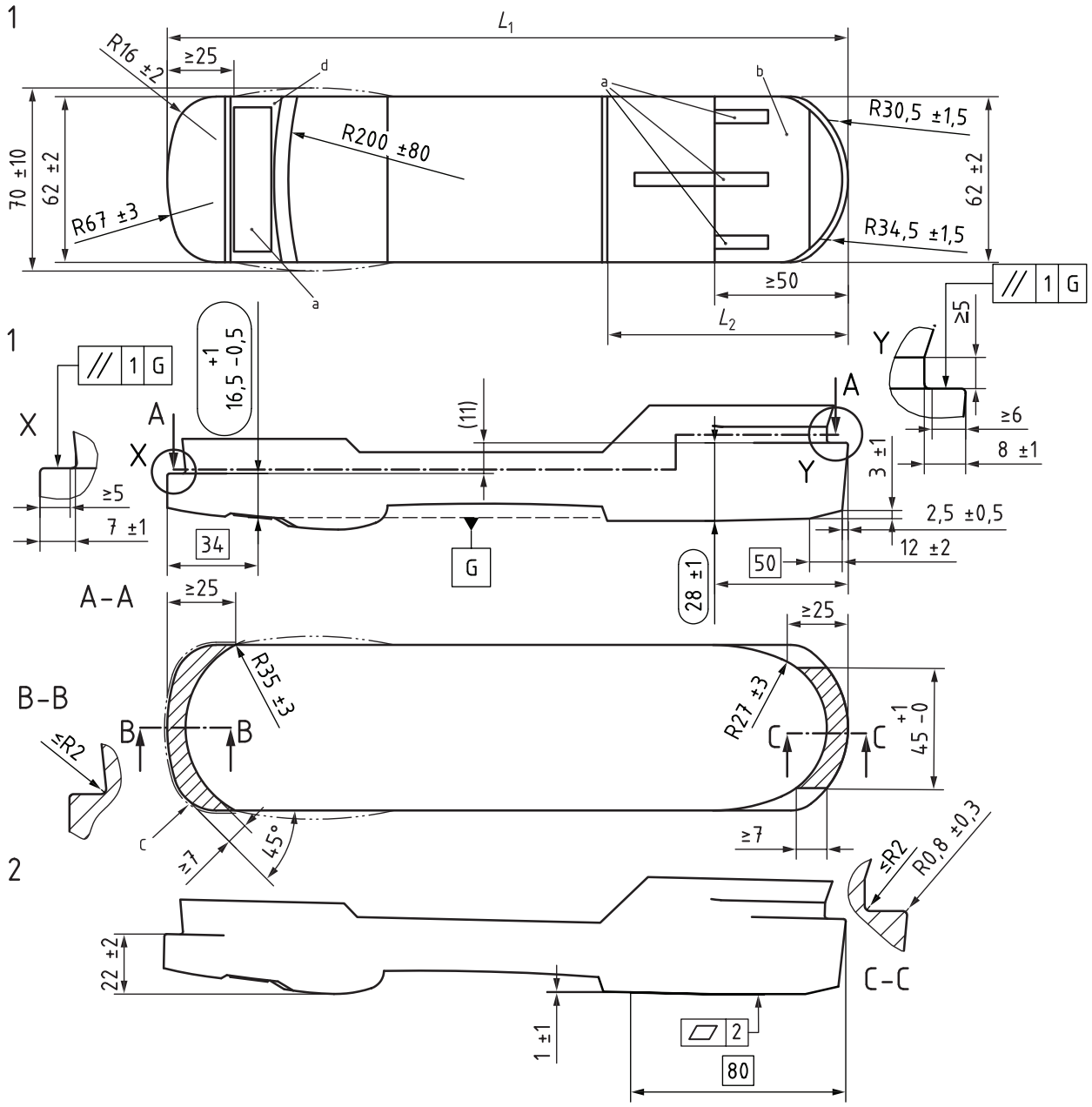

Key

1 position: in gauge

2 position: flat on table

G reference plane (see Figure C.2)

L_1 sole length

L_2 heel length

a Low-friction zone in accordance with 4.3.5.1.

b Bearing surface.

© ISO 2025 – All rights reserved

Documents
Document Sharing Hub
Full document details: BS ISO 23223:2025

c Area in which the tolerance of perpendicularity is valid (see 4.3.3.1).

d Section of recessed soft component not in contact to binding.

NOTE Shaded areas, including areas designated by footnote c, are those in which the tolerances of evenness and the dimensions $16{,}5^{+1}_{-0{,}5}$ and 28 ± 1 are valid.

L_1	< 240	≥ 240
L_2	≥ 80	≥ 90

Figure 3 — Dimensions of boot toe and heel, Type C

Figure 4 provides all the key dimensions (nominal) to build new boots. The gauge (see Annex C) can be used to check whether a boot is in conformity with this document.

Dimensions in millimetres

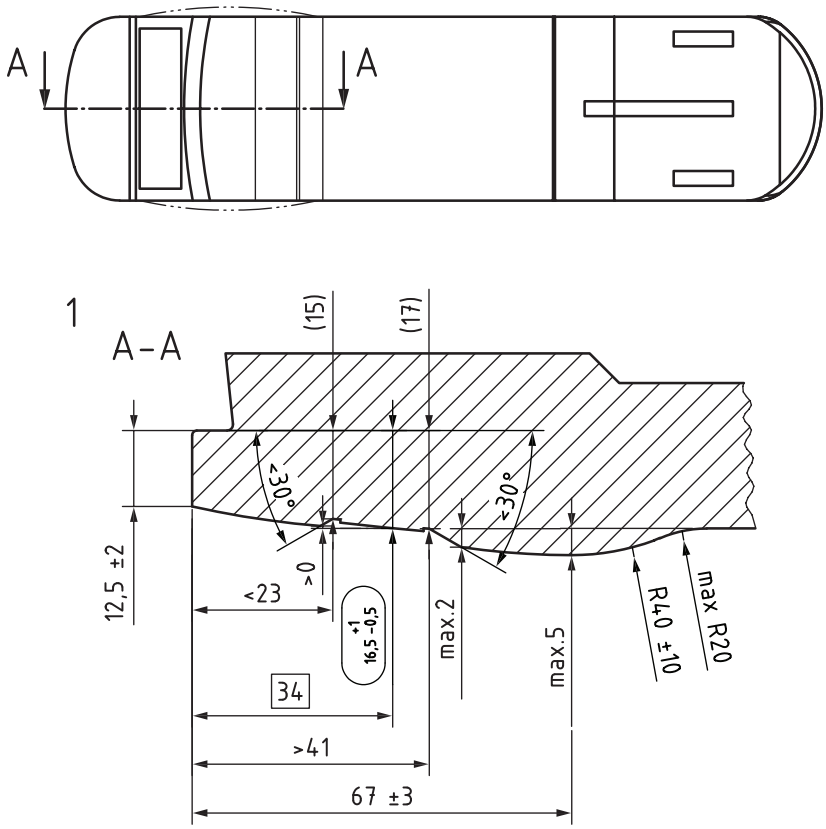

Key

1 position: in gauge

NOTE Some of these measurements are of 2nd degree, see Annex B.

Figure 4 — Detailed dimensions of boot, Type C

© ISO 2025 – All rights reserved

Documents
Document Sharing Hub
Full document details: BS ISO 23223:2025

Dimensions in millimetres

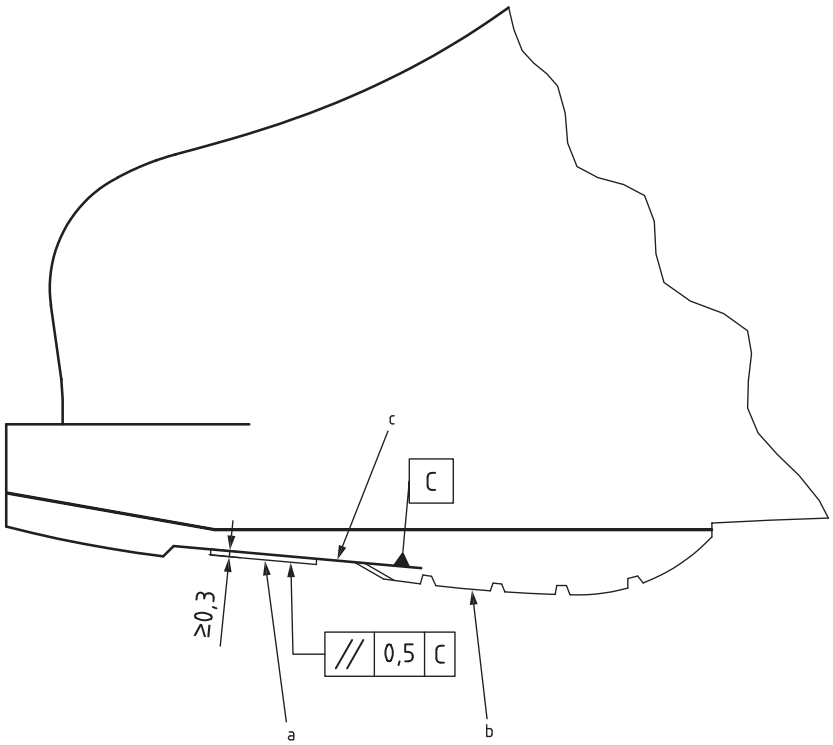

a Low-friction zone with requirement for bearing surfaces in accordance with 4.3.5.

b Soft component.

c The soft component in the low-friction zone shall be at least 0,3 mm deeper than the low-friction zone.

Figure 5 — Toe interface and ski–walk area Type A and Type C

4.2.2 Evenness

4.2.2.1 Requirement

Measurements on each side of median plane shall not differ by more than 0,7 mm for Type A and 0,6 mm for Type C for the toe area and 1,2 mm for the heel area (Type A and Type C). The preload (F) shall be of 100 N for Type A and 50 N for Type C, at a distance (L) of 75 mm for Type A and 64 mm for Type C. Apply the preload for minimum 1 minute before the measurement is started.

4.2.2.2 Test method

The sample boot shall be placed as described in Figure 6. The X direction is along the boot length and is measured from boot tip or rear, for toe or heel area respectively. Y direction is measured from median plane along boot width. Height shall be measured with an indicator on each side of the median plane (positive and negative Y direction).

In the toe area the four measurements points are located at

— Type A: x = 32 mm and x = 42 mm with y = ±25 mm, see Figure 7, and

— Type C: x = 27 mm and x = 37 mm with y = ±22 mm.

In the heel area four measurement points shall be selected within 25 mm and 60 mm from the heel, and within

— Type A: 20 mm to 30 mm from the median plane, and

© ISO 2025 – All rights reserved

Documents
Document Sharing Hub
Full document details: BS ISO 23223:2025

— Type C: 18 mm to 28 mm from the median plane,

as shown in the hatched area in Figure 7 (for Type A). The points shall be symmetrical 2 by 2 with respect to the median plane. The points shall be in a zone which is at the interface of the sole (i.e. not in a notch).

Dimensions in millimetres

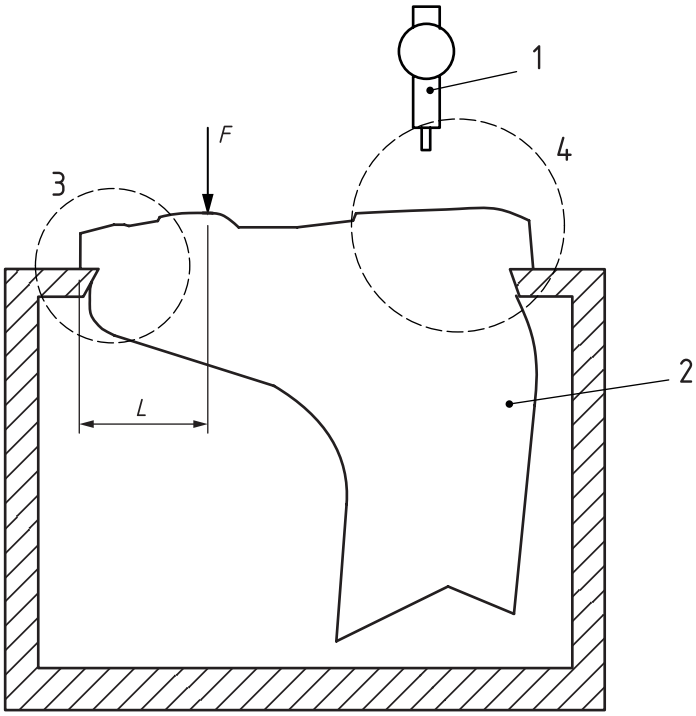

Key

1 indicator – evenness measurement apparatus
2 sample boot
3 toe area
4 heel area
F preload
L distance of preload point

Figure 6 — Evenness test set up

© ISO 2025 – All rights reserved

Documents
Document Sharing Hub
Full document details: BS ISO 23223:2025