BS ISO 23316-2:2023

BSI Standards Publication

Tractors and machinery for agriculture and forestry — Electrical high-power interface 700 V DC / 480 V AC

Part 2: Physical interface

Documents
Document Sharing Hub

Full document details: BS ISO 23316-2:2023

National foreword

This British Standard is the UK implementation of ISO 23316-2:2023.

The UK participation in its preparation was entrusted to Technical Committee AGE/6, Agricultural tractors and forestry machinery.

A list of organizations represented on this committee can be obtained on request to its committee manager.

Contractual and legal considerations

This publication has been prepared in good faith, however no representation, warranty, assurance or undertaking (express or implied) is or will be made, and no responsibility or liability is or will be accepted by BSI in relation to the adequacy, accuracy, completeness or reasonableness of this publication. All and any such responsibility and liability is expressly disclaimed to the full extent permitted by the law.

This publication is provided as is, and is to be used at the recipient's own risk.

The recipient is advised to consider seeking professional guidance with respect to its use of this publication.

This publication is not intended to constitute a contract. Users are responsible for its correct application.

© The British Standards Institution 2023
Published by BSI Standards Limited 2023

ISBN 978 0 539 12164 3

ICS 65.060.10

Compliance with a British Standard cannot confer immunity from legal obligations.

This British Standard was published under the authority of the Standards Policy and Strategy Committee on 31 October 2023.

Amendments/corrigenda issued since publication

Date	Text affected

Documents
Document Sharing Hub

Full document details: BS ISO 23316-2:2023

INTERNATIONAL STANDARD

ISO 23316-2

First edition
2023-09

Tractors and machinery for agriculture and forestry — Electrical high-power interface 700 V DC / 480 V AC —

Part 2: Physical interface

Reference number
ISO 23316-2:2023(E)

Documents
Document Sharing Hub

© ISO 2023

Full document details: BS ISO 23316-2:2023

COPYRIGHT PROTECTED DOCUMENT

© ISO 2023

All rights reserved. Unless otherwise specified, or required in the context of its implementation, no part of this publication may be reproduced or utilized otherwise in any form or by any means, electronic or mechanical, including photocopying, or posting on the internet or an intranet, without prior written permission. Permission can be requested from either ISO at the address below or ISO's member body in the country of the requester.

ISO copyright office
CP 401 • Ch. de Blandonnet 8
CH-1214 Vernier, Geneva
Phone: +41 22 749 01 11
Email: copyright@iso.org
Website: www.iso.org

Published in Switzerland

© ISO 2023 – All rights reserved

Documents
Document Sharing Hub

Full document details: BS ISO 23316-2:2023

Contents

Page

Foreword ... **v**
Introduction ... **vi**
1 Scope ... **1**
2 Normative references ... **1**
3 Terms and definitions ... **3**
4 Connector requirements ... **3**
4.1 General function description ... 3
4.2 Detailed function description ... 3
4.3 Geometric requirements ... 3
4.3.1 General ... 3
4.3.2 Interface geometric definition ... 3
4.4 Connector external requirements ... 30
4.5 Phase contacts ... 30
4.5.1 General ... 30
4.5.2 AC/DC current ... 31
4.5.3 AC/DC voltage ratings ... 31
4.5.4 Withstand voltage ... 31
4.5.5 Clearance and creepage distances ... 31
4.5.6 Rated continuous current ... 32
4.5.7 Contact resistance ... 32
4.5.8 Protection against access ... 32
4.5.9 Reference altitude ... 32
4.6 Protective bonding conductor (PBC) contact ... 32
4.7 DC interlock ... 32
4.8 Communication contacts and link segment ... 33
4.8.1 General aspects ... 33
4.8.2 Communication contacts requirements ... 33
4.8.3 Communication link segment requirements ... 34
4.8.4 Cross talk from environment ... 34
4.9 EMC shielding ... 35
4.9.1 Connector shielding ... 35
4.9.2 Communication pins shielding ... 35
4.9.3 Shields performance ... 36
4.10 Connecting sequences ... 39
4.10.1 Connecting sequence ... 39
4.10.2 Disconnecting sequence ... 40
4.11 Connector pinning ... 40
4.11.1 Tractor side ... 41
4.11.2 Implement side ... 41
4.12 Insulation resistance ... 42
4.13 Connecting procedure ... 42
4.14 Mechanical loads ... 42
4.15 Ingress protection level of components ... 42
4.15.1 Requirements ... 42
4.15.2 Implement connector park housing ... 42
4.15.3 Cover ... 43
4.16 Environmental conditions ... 43
4.17 Durability ... 43
4.18 Marking ... 43
4.18.1 Accessories marking ... 43
4.18.2 Pin marking ... 43
4.18.3 Markings shall be indelible and easily legible. ... 43

© ISO 2023 – All rights reserved

Documents
Document Sharing Hub
Full document details: BS ISO 23316-2:2023

5 Environmental qualification tests ... **44**
5.1 General ... 44
5.1.1 Requirement ... 44
5.1.2 Test sequence ... 44
5.1.3 Test methods ... 44
5.2 Examination of product ... 44
5.3 Insulation resistance ... 44
5.4 Connection resistance ... 45
5.5 Pressure washing, cleaning ... 45
5.6 Ultraviolet effects ... 45
5.7 Connecting and disconnecting forces ... 45
5.8 Durability ... 45
5.8.1 General ... 45
5.8.2 Test A ... 46
5.8.3 Test B ... 46
5.9 Salt environment ... 46
5.10 Thermal shock ... 46
5.11 Chemical and liquid immersion ... 46
5.12 Vibration ... 46
5.13 Shock ... 47
5.14 Drop tests ... 47
5.14.1 General ... 47
5.14.2 Test 1 ... 47
5.14.3 Test 2 ... 47
5.14.4 Test 3 ... 48
5.15 Terminal retention/Plug pull test ... 48
5.16 Ice water shock test ... 48
5.17 Current test ... 48
5.18 Break-away test ... 48
5.19 Communication ... 48
5.20 Gravel bombardment ... 48
5.21 Corrosive atmosphere ... 49
5.22 Storage ... 49
5.23 Over rolling test ... 49
5.24 Composite temperature/humidity/current cyclic test ... 49
5.24.1 General ... 49
5.24.2 Severities ... 49
5.25 Dust test ... 51
5.26 Marking test ... 51

Annex A (informative) **Qualification test sequence example** ... **52**

Annex B (informative) **System and interface** ... **57**

Bibliography ... **58**

© ISO 2023 – All rights reserved

Documents
Document Sharing Hub
Full document details: BS ISO 23316-2:2023

Foreword

ISO (the International Organization for Standardization) is a worldwide federation of national standards bodies (ISO member bodies). The work of preparing International Standards is normally carried out through ISO technical committees. Each member body interested in a subject for which a technical committee has been established has the right to be represented on that committee. International organizations, governmental and non-governmental, in liaison with ISO, also take part in the work. ISO collaborates closely with the International Electrotechnical Commission (IEC) on all matters of electrotechnical standardization.

The procedures used to develop this document and those intended for its further maintenance are described in the ISO/IEC Directives, Part 1. In particular, the different approval criteria needed for the different types of ISO document should be noted. This document was drafted in accordance with the editorial rules of the ISO/IEC Directives, Part 2 (see www.iso.org/directives).

ISO draws attention to the possibility that the implementation of this document may involve the use of (a) patent(s). ISO takes no position concerning the evidence, validity or applicability of any claimed patent rights in respect thereof. As of the date of publication of this document, ISO had received notice of (a) patent(s) which may be required to implement this document. However, implementers are cautioned that this may not represent the latest information, which may be obtained from the patent database available at www.iso.org/patents. ISO shall not be held responsible for identifying any or all such patent rights.

Any trade name used in this document is information given for the convenience of users and does not constitute an endorsement.

For an explanation of the voluntary nature of standards, the meaning of ISO specific terms and expressions related to conformity assessment, as well as information about ISO's adherence to the World Trade Organization (WTO) principles in the Technical Barriers to Trade (TBT), see www.iso.org/iso/foreword.html.

This document was prepared by Technical Committee ISO/TC 23, *Tractors and machinery for agriculture and forestry*, Subcommittee SC 19, *Agricultural electronics*.

This document is intended to be used in conjunction with ISO 23316-1, ISO 23316-3, ISO 23316-4, ISO 23316-5 and ISO/FDIS 23316-6:—.

A list of all parts in the ISO 23316 series can be found on the ISO website.

Any feedback or questions on this document should be directed to the user's national standards body. A complete listing of these bodies can be found at www.iso.org/members.html.

© ISO 2023 – All rights reserved

Documents
Document Sharing Hub
Full document details: BS ISO 23316-2:2023

Introduction

The purpose ISO 23316 series is to provide design and application standards covering implementation of an electrical high-power interface with a nominal voltage of 700 V DC/480 V AC for agricultural and forestry machinery.

The ISO 23316 series specifies physical and logical interface requirements that provide interoperability and cross compatibility for systems and equipment operating at nominal voltages of 700 V DC/480 V AC.

The following are not within the scope of ISO 23316:

— service, maintenance, and related diagnostics;

— functional safety;

— control strategies for high-power supplies and loads;

— application-specific strategies and operational modes;

— component design;

— energy storage systems, e.g. supercapacitors or batteries;

— multiple electrical power supplies to a common DC-link.

© ISO 2023 – All rights reserved
Documents
Document Sharing Hub
Full document details: BS ISO 23316-2:2023

Tractors and machinery for agriculture and forestry — Electrical high-power interface 700 V DC / 480 V AC —

Part 2: Physical interface

1 Scope

This document specifies direction for the design of the physical interface between a supply system and a consumer system. Electrical, geometrical and test requirements are defined within this document.

2 Normative references

The following documents are referred to in the text in such a way that some or all of their content constitutes requirements of this document. For dated references, only the edition cited applies. For undated references, the latest edition of the referenced document (including any amendments) applies.

ISO/IEC/IEEE 8802-3:2021, *Telecommunications and exchange between information technology systems — Requirements for local and metropolitan area networks — Part 3: Standard for Ethernet*

ISO 4892-3, *Plastics — Methods of exposure to laboratory light sources — Part 3: Fluorescent UV lamps*

ISO 6270-2, *Paints and varnishes — Determination of resistance to humidity — Part 2: Condensation (in-cabinet exposure with heated water reservoir)*

ISO 8092-2:2005, *Road vehicles — Connections for on-board electrical wiring harnesses — Part 2: Definitions, test methods and general performance requirements*

ISO 9227, *Corrosion tests in artificial atmospheres — Salt spray tests*

ISO 16230-1, *Agricultural machinery and tractors — Safety of higher voltage electrical and electronic components and systems — Part 1: General requirements*

ISO 16750-3:2012, *Road vehicles — Environmental conditions and testing for electrical and electronic equipment — Part 3: Mechanical loads*

ISO 16750-4, *Road vehicles — Environmental conditions and testing for electrical and electronic equipment – Part 4: Climatic loads*

ISO 16750-5:2010, *Road vehicles — Environmental conditions and testing for electrical and electronic equipment — Part 5: Chemical loads*

ISO 20567-1, *Paints and varnishes — Determination of stone-chip resistance of coatings — Part 1: Multi-impact testing*

ISO 20653, *Road vehicles — Degrees of protection (IP code) — Protection of electrical equipment against foreign objects, water and access*

ISO 23316-1:2022, *Tractors and machinery for agriculture and forestry — Electrical high-power interface 700 V DC / 480 V AC — Part 1: General*

ISO 23316-4, *Tractors and machinery for agriculture and forestry — Electrical high-power interface 700 V DC / 480 V AC — Part 4: AC operation mode*

© ISO 2023 – All rights reserved

Documents
Document Sharing Hub
Full document details: BS ISO 23316-2:2023

ISO/FDIS 23316-6:—[1], *Tractors and machinery for agriculture and forestry — Electrical high-power interface 700 V DC / 480 V AC — Part 6: Communication signals*

IEC 60068-2-6, *Environmental testing — Part 2-6: Tests — Test Fc: Vibration (sinusoidal)*

IEC 60068-2-14, *Environmental testing — Part 2-14: Tests — Test N: Change of temperature*

IEC 60068-2-27, *Environmental testing — Part 2-27: Tests — Test Ea and guidance: Shock*

IEC 60068-2-31, *Environmental testing — Part 2-31: Tests — Test Ec: Rough handling shocks, primarily for equipment-type specimens*

IEC 60068-2-60:2015, *Environmental testing — Part 2-60: Tests — Test Ke: Flowing mixed gas corrosion test*

IEC 60068-2-78, *Environmental testing — Part 2-78: Tests — Test Cab: Damp heat, steady state*

IEC 60309-1, *Plugs, socket-outlets and couplers for industrial purposes — Part 1: General requirements*

IEC 60512-2-1, *Connector for electronic equipment — Tests and measurements — Parts 2-1: Electrical continuity and contact resistance — Test 2a: Contact resistance – Millivolt level method*

IEC 60512-5-1, *Connectors for electronic equipment — Tests and measurements — Part 5-1: Current – carrying capacity tests — Test 5a: Temperature rise*

IEC 60512-5-2, *Connectors for electronic equipment — Tests and measurements — Part 5-2: Current – carrying capacity tests — Test 5b: Current - temperature derating*

IEC 60512-23-7, *Connectors for electronic equipment — Tests and measurements — Part 23-7: Screening and filtering tests — Test 23g: Effective transfer impedance of connectors*

IEC 60512-25-2, *Connectors for electronic equipment — Tests and measurements — Part 25-2: Test 25g — Attenuation (insertion loss)*

IEC 60512-25-5, *Connectors for electronic equipment — Tests and measurements — Part 25-5: Test 25e — Return loss*

IEC 60512-25-7, *Connectors for electronic equipment — Tests and measurements — Part 25-7: Test 25g — Impedance, reflection coefficient, and voltage standing wave ratio (VSWR)*

IEC 60603-7-7:2010, *Connectors for electronic equipment — Part 7-7: Detail specification for 8-way, shielded, free and fixed connectors for data transmission with frequencies up to 600 MHz*

IEC 60664-1:2007, *Insulation coordination for equipment within low voltage systems*

IEC 61984, *Connectors — Safety requirements and tests*

IEC 62153-4-6, *Metallic cables and other passive components test methods — Part 4-6: Electromagnetic compatibility (EMC) — Surface transfer impedance — Line injection method*

IEC 62153-4-7, *Electromagnetic compatibility (EMC) — Test method for measuring of transfer impedance ZT and screening attenuation ac or coupling attenuation ac of connectors and assemblies up to and above 3 GHz – Triaxle tube in tube method*

IEC 62196-1:2014, *Plugs, socket outlets, vehicle connectors and vehicle inlets — Conductive charging of electric vehicles — Part 1: General requirements*

1) Under development. Stage at the date of publication: ISO/FDIS 23316-6:2023.

© ISO 2023 – All rights reserved
Documents
Document Sharing Hub
Full document details: BS ISO 23316-2:2023

3 Terms and definitions

For the purposes of this document, the terms and definitions given in ISO 23316-1, ISO/FDIS 23316-6:— and the following apply.

ISO and IEC maintain terminological databases for use in standardization at the following addresses:

— ISO Online browsing platform: available at https://www.iso.org/obp

— IEC Electropedia: available at https://www.electropedia.org/

3.1
space inside the connector
area inside of the connector which is permanently closed and cannot be reached without tools

3.2
exposed connector parts and surfaces
all connector parts and space inside connector face which are accessible without using tools

3.3
comparative tracking index
CTI
numerical value of the maximum voltage at which five test specimens withstand the test period for 50 drops without tracking failure and without a persistent flame occurring and including also a statement relating to the behaviour of the material when tested using 100 drops

[SOURCE: IEC 60112:2009, 3.5]

4 Connector requirements

4.1 General function description

a) The connector is part of the electric drive system of agricultural vehicles and implements.

b) Its function is to provide external consumers with electric power.

c) The connector is intended to be a part mounted to the vehicle chassis exterior.

4.2 Detailed function description

a) The connector shall be designed such that more than one connector can be installed on vehicle.

b) The connector shall incorporate a housing providing environmental protection, including EMC shielding.

4.3 Geometric requirements

4.3.1 General

The connector shall provide a cable strain relief.

4.3.2 Interface geometric definition

4.3.2.1 General tolerances

General tolerance applies to all unspecified dimensions on the partial drawings within this subclause. See Table 1.

© ISO 2023 – All rights reserved

Documents
Document Sharing Hub
Full document details: BS ISO 23316-2:2023

Table 1 — Tolerances

	Range 1	Range 2	Range 3	Angles
Length of dimension [mm]	0 – 50	50 – 100	100 >	n/a
Tolerance [mm]	±0,15	±0,2	±0,3	±0,5°

4.3.2.2 Maximum material model for the tractor side

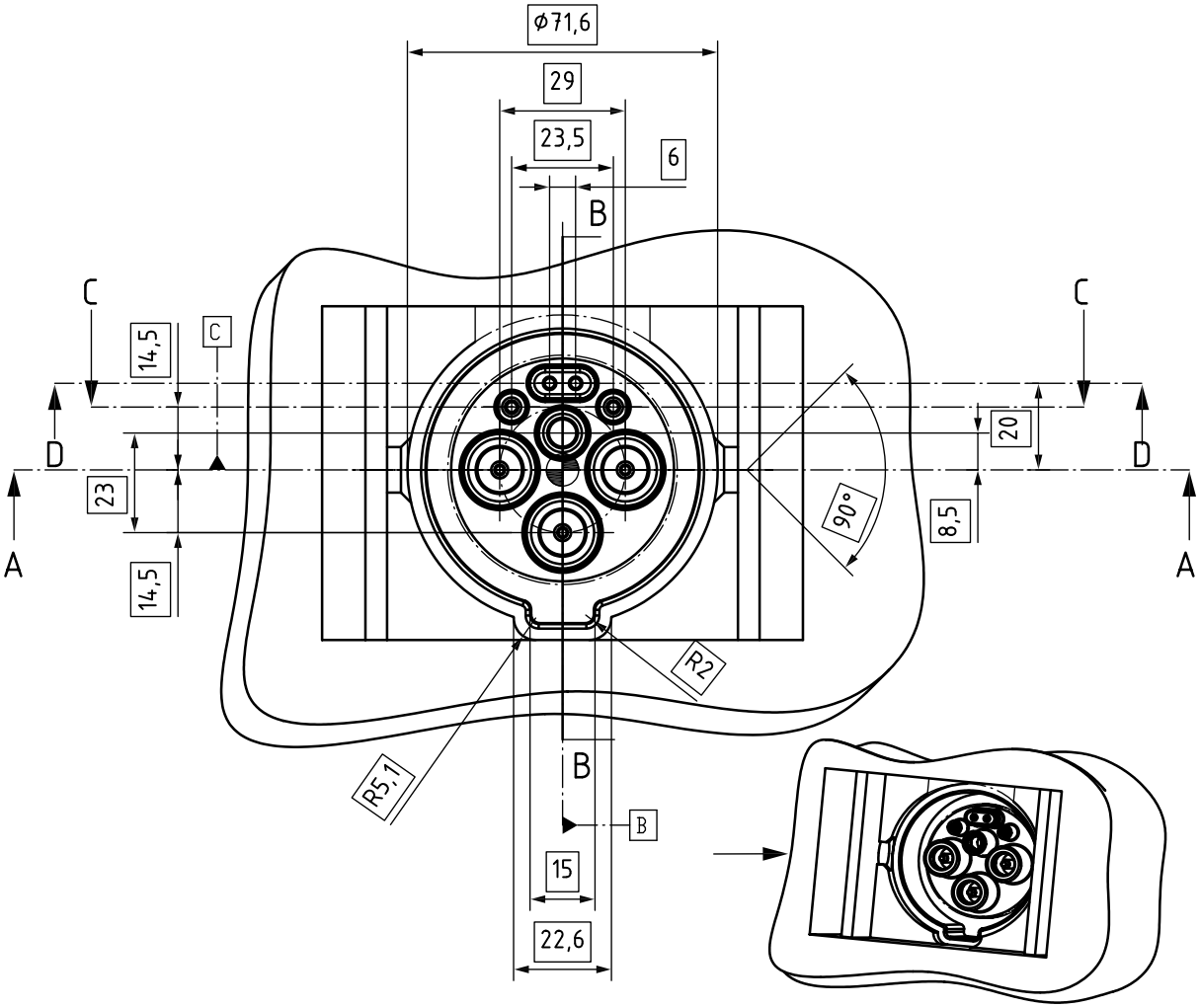

Figure 1 — Main front view of the tractor side in maximum material model

© ISO 2023 – All rights reserved
Documents
Document Sharing Hub
Full document details: BS ISO 23316-2:2023

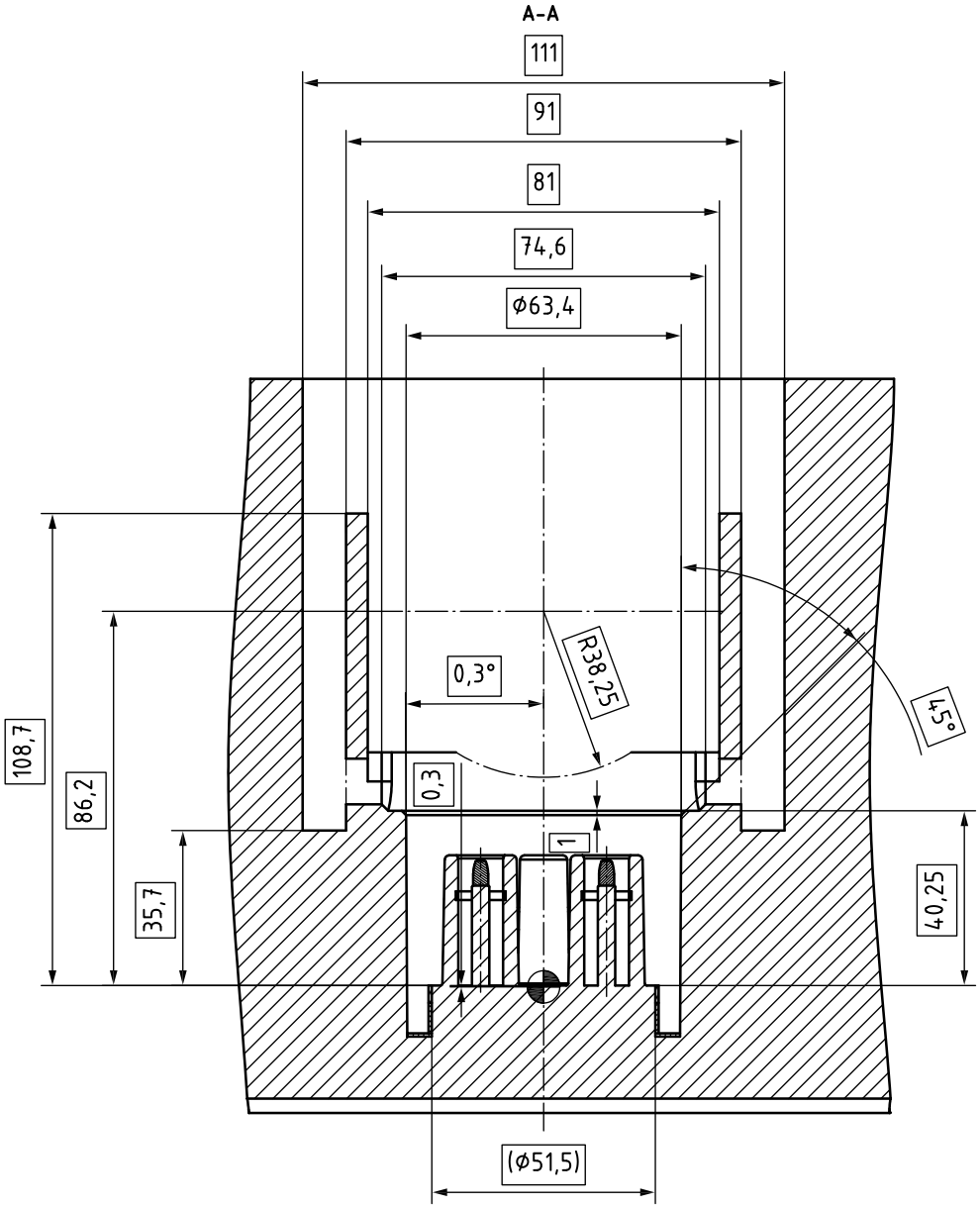

Figure 2 — Main front view, section A-A

© ISO 2023 – All rights reserved

Documents
Document Sharing Hub
Full document details: BS ISO 23316-2:2023

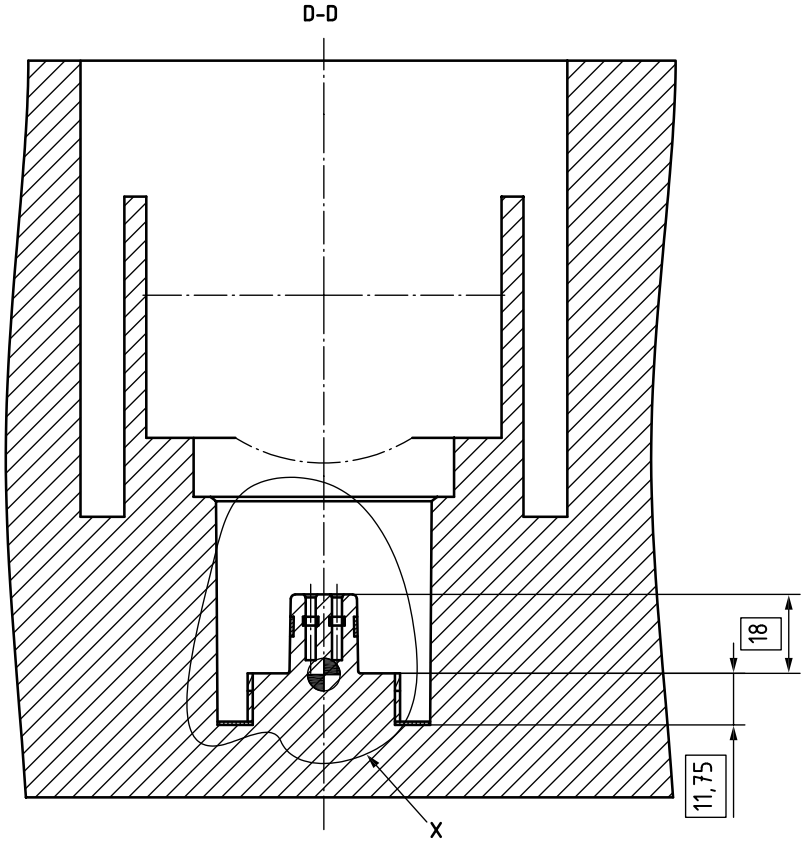

Figure 3 — Main front view, section D-D

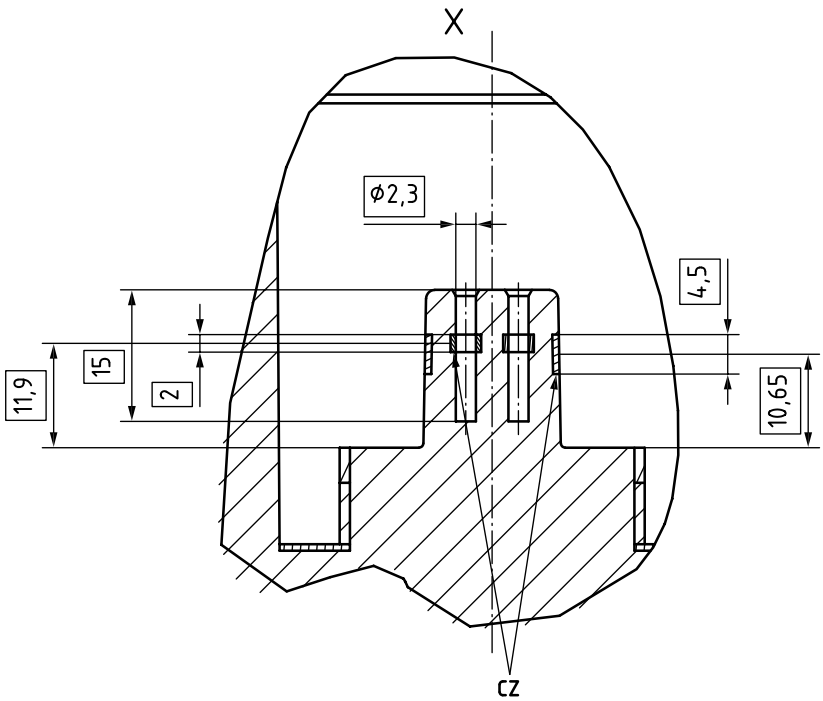

Key

CZ contact zone

Figure 4 — Main front view, section D-D and detail X

© ISO 2023 – All rights reserved

Documents
Document Sharing Hub
Full document details: BS ISO 23316-2:2023

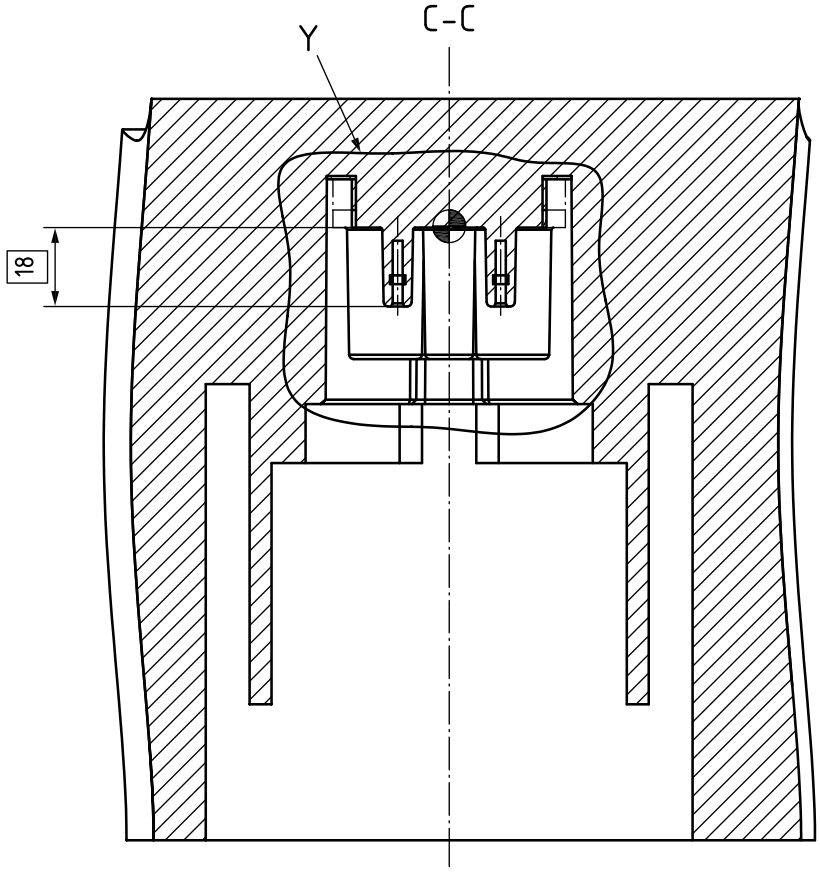

Figure 5 — Main front view, section C-C

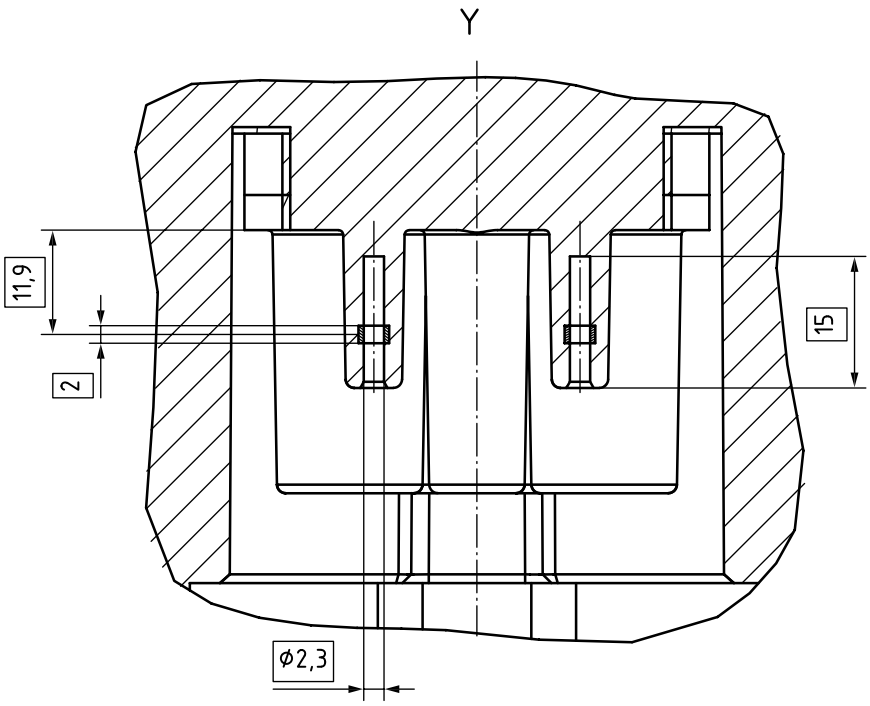

Figure 6 — Main front view, section C-C and detail Y

© ISO 2023 – All rights reserved

Documents
Document Sharing Hub
Full document details: BS ISO 23316-2:2023

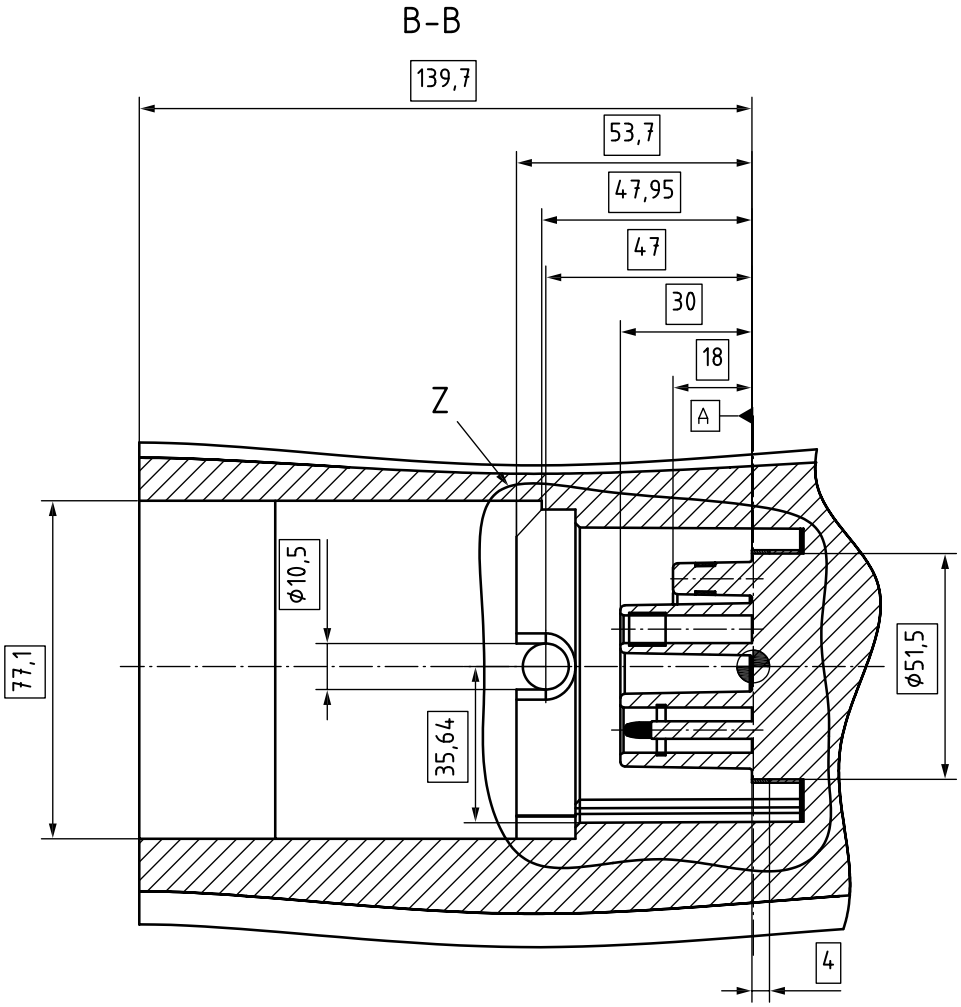

Figure 7 — Main front view, section B-B

© ISO 2023 – All rights reserved
Documents
Document Sharing Hub
Full document details: BS ISO 23316-2:2023

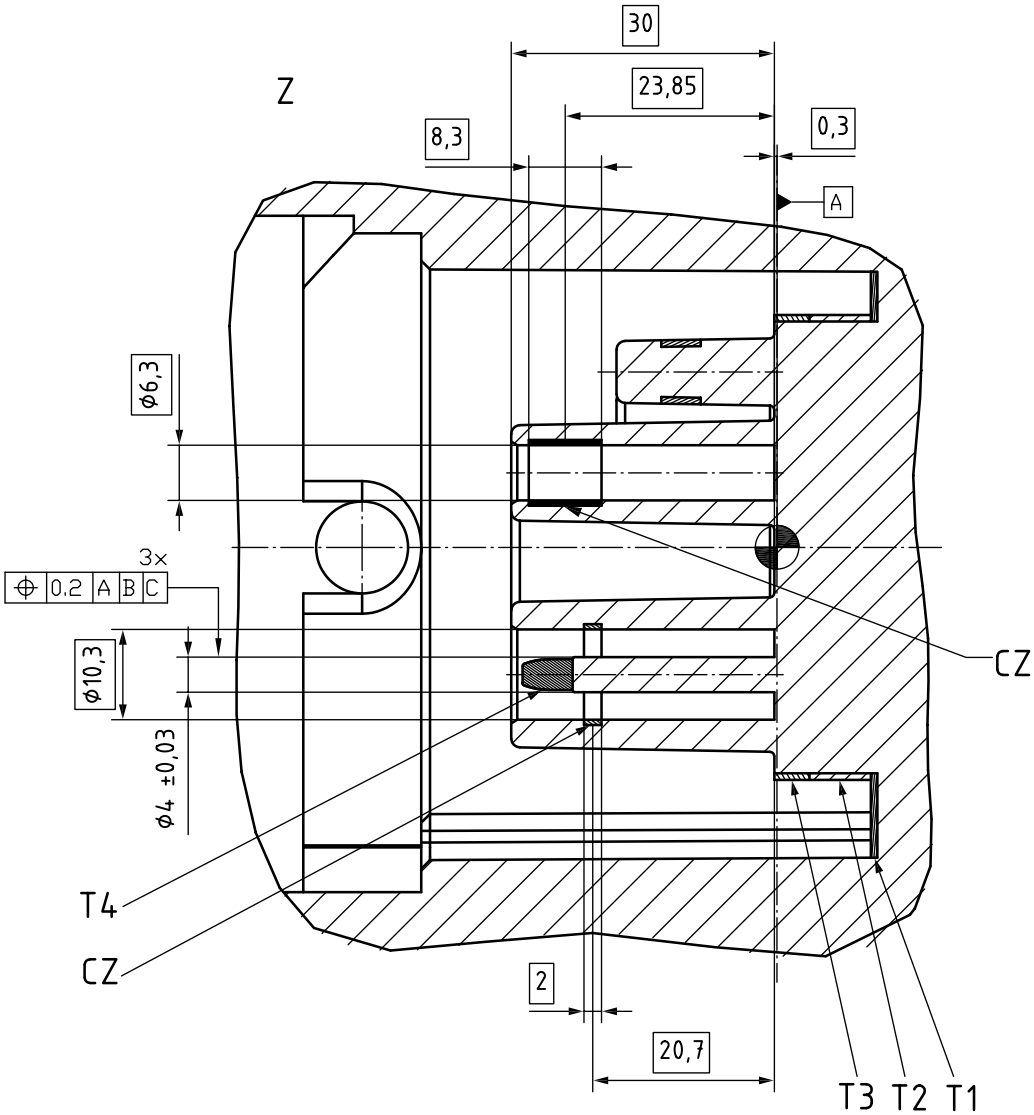

Key

CZ contact zone

T1 area for axial tolerance compensation

T2 area for sealing

T3 area for shield transfer

T4 finger protection cap

Figure 8 — Main front view, section B-B, detail Z

© ISO 2023 – All rights reserved

Documents
Document Sharing Hub
Full document details: BS ISO 23316-2:2023

4.3.2.3 Minimum material model for the tractor side

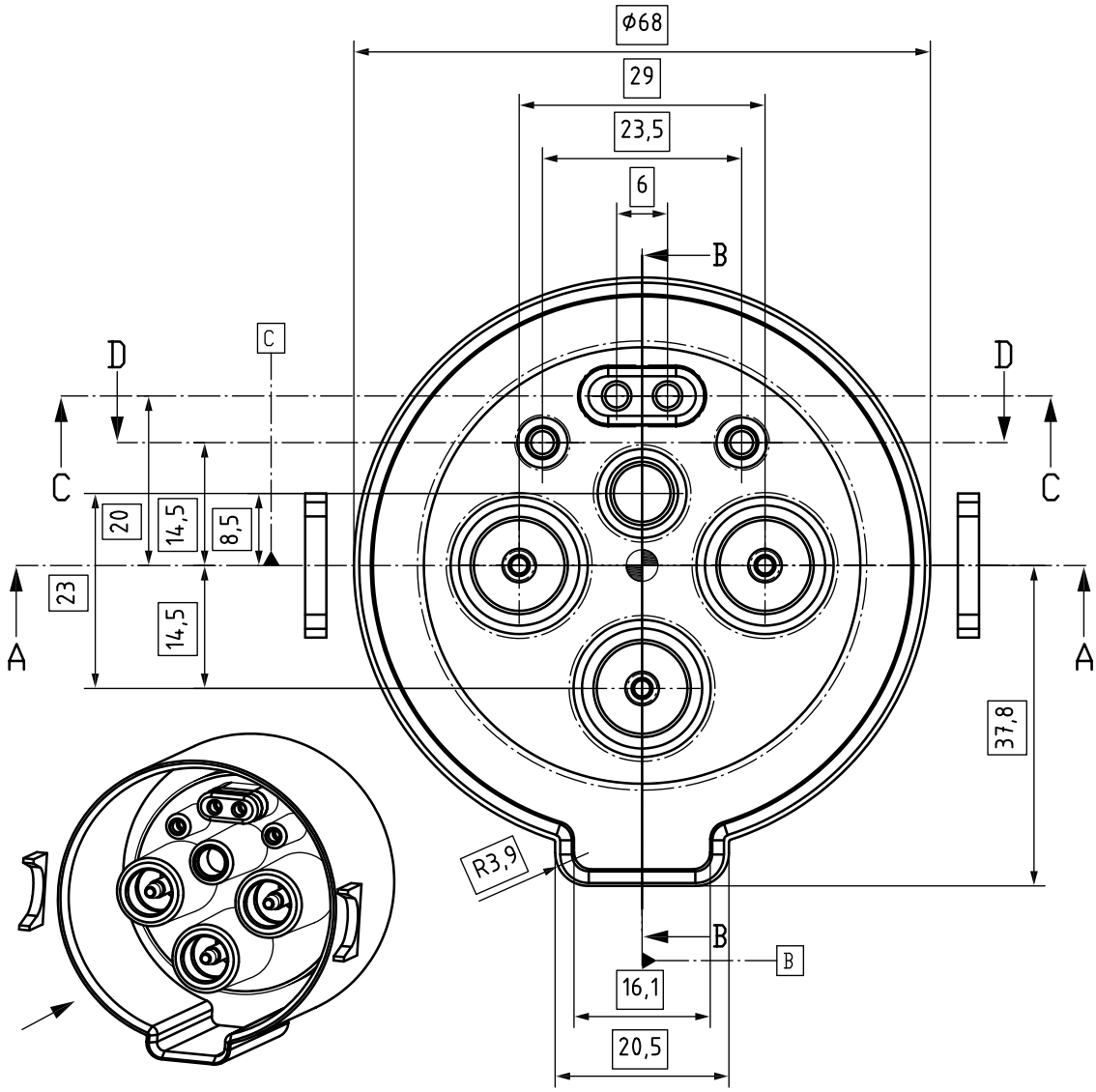

Figure 9 — Main front view of the tractor side in minimum material model

© ISO 2023 – All rights reserved
Documents
Document Sharing Hub
Full document details: BS ISO 23316-2:2023

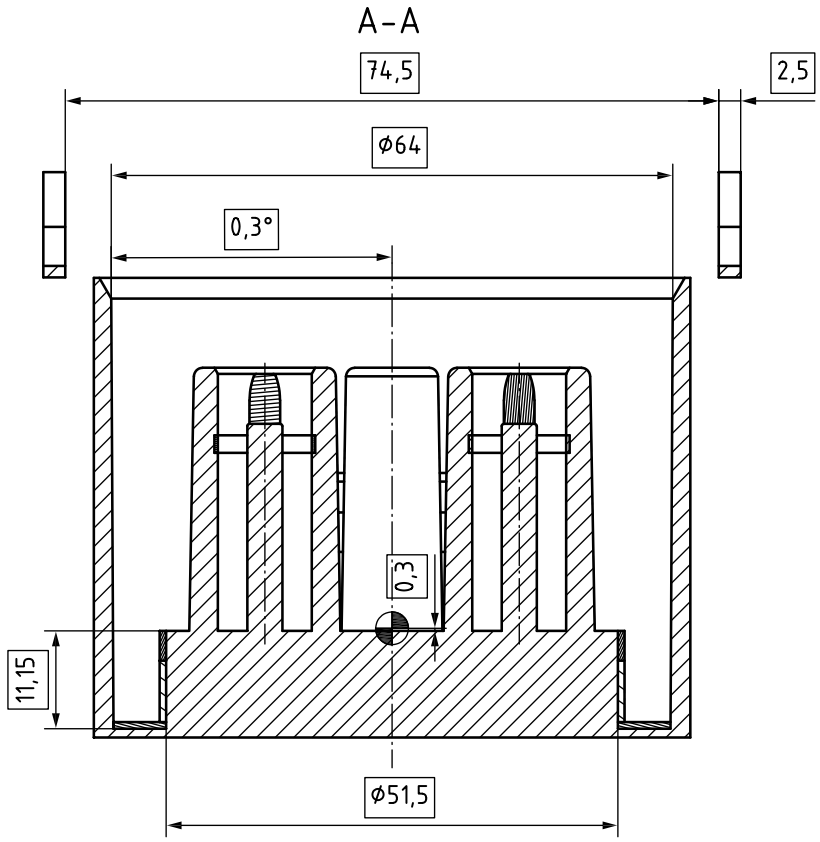

Figure 10 — Main front view, section A-A

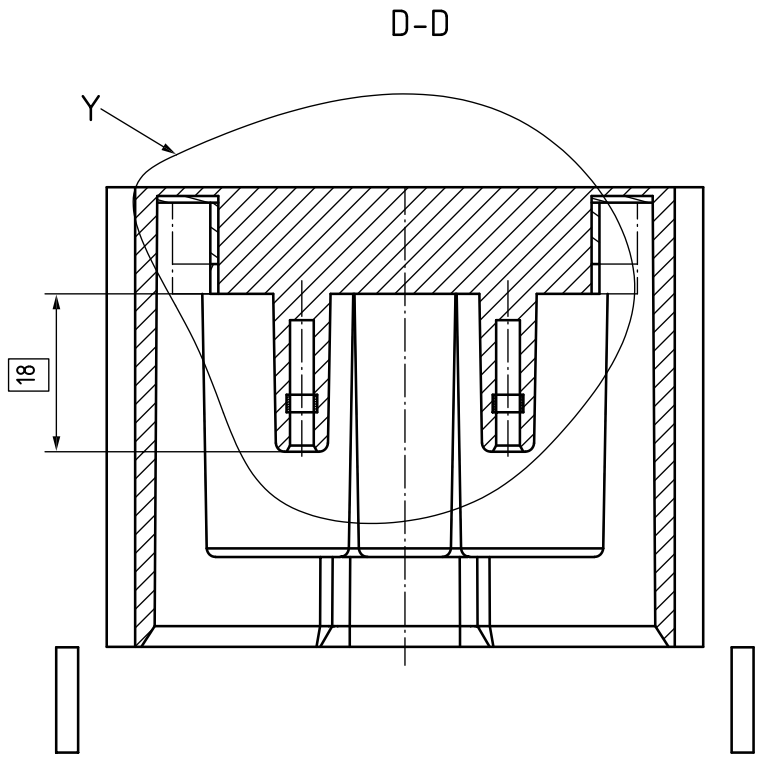

Figure 11 — Main front view, section D-D

© ISO 2023 – All rights reserved

Documents
Document Sharing Hub
Full document details: BS ISO 23316-2:2023

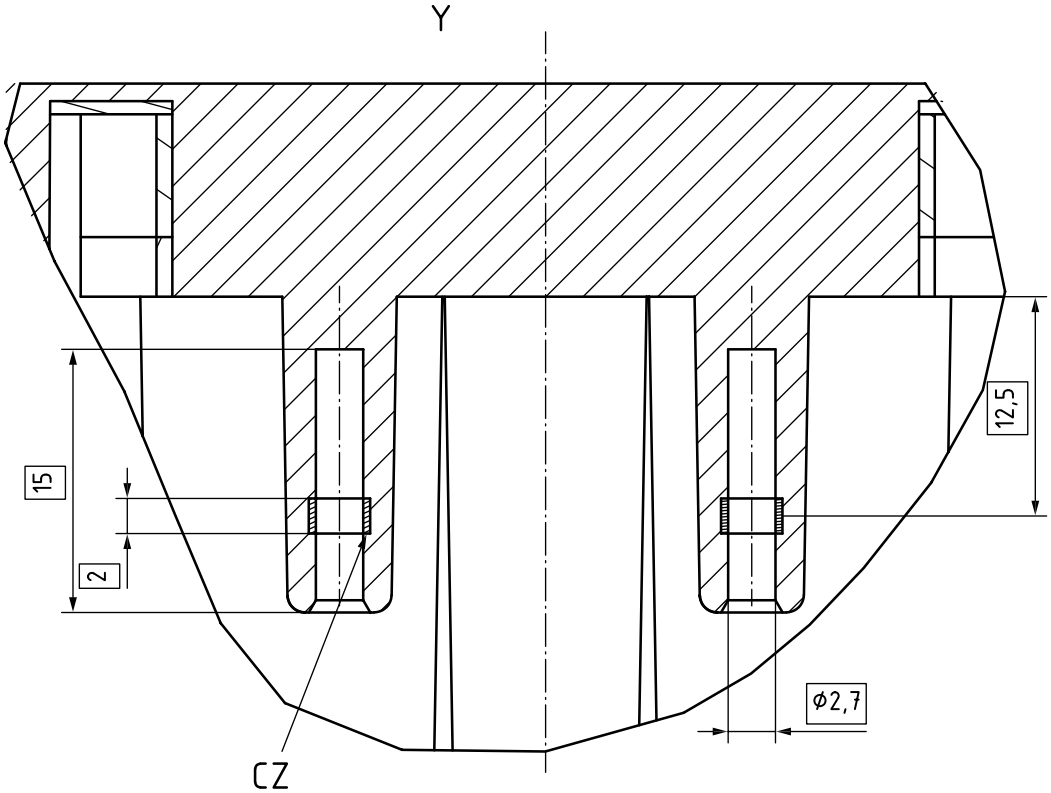

Key

CZ contact zone

Figure 12 — Main front view, section D-D, detail Y

© ISO 2023 – All rights reserved
Documents
Document Sharing Hub
Full document details: BS ISO 23316-2:2023

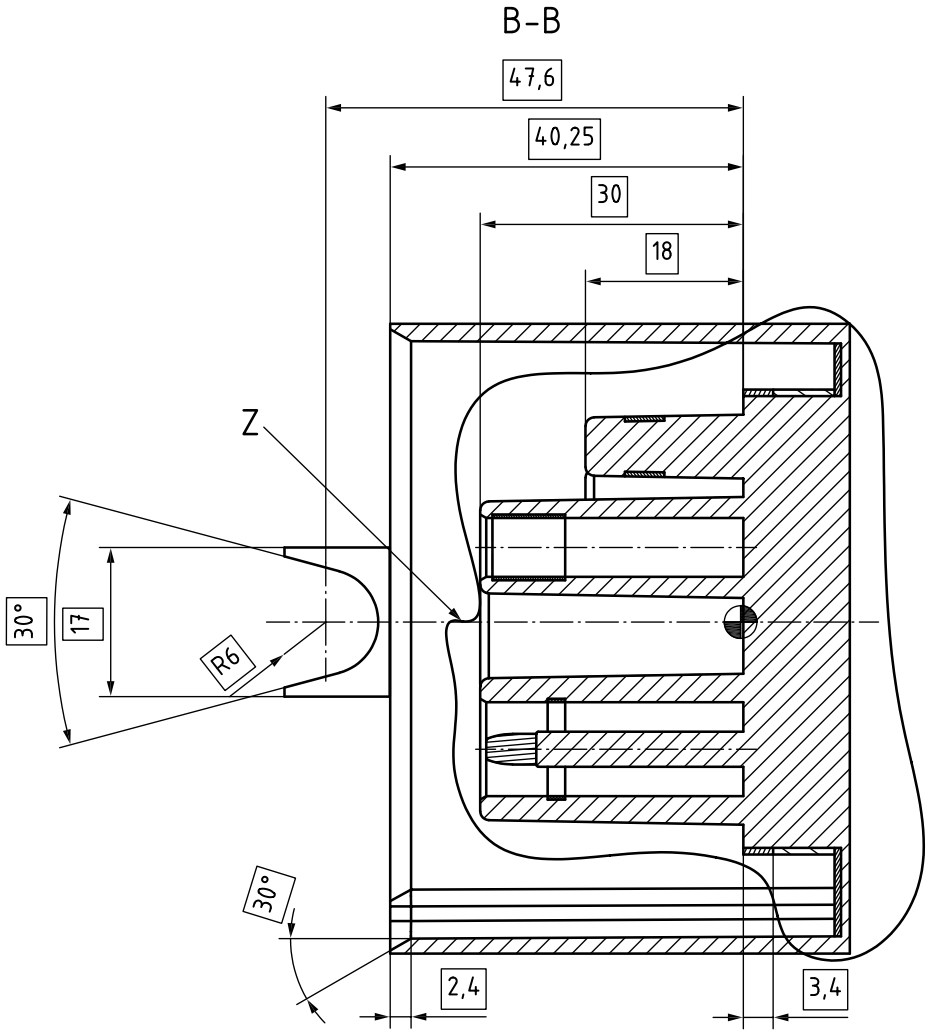

Figure 13 — Main front view, section B-B

© ISO 2023 – All rights reserved

Documents
Document Sharing Hub
Full document details: BS ISO 23316-2:2023