BS ISO 23316-5:2023

BSI Standards Publication

Tractors and machinery for agriculture and forestry — Electrical high-power interface 700 V DC / 480 V AC

Part 5: DC operation mode

Documents
Document Sharing Hub

Full document details: BS ISO 23316-5:2023

National foreword

This British Standard is the UK implementation of ISO 23316-5:2023.

The UK participation in its preparation was entrusted to Technical Committee AGE/6, Agricultural tractors and forestry machinery.

A list of organizations represented on this committee can be obtained on request to its committee manager.

Contractual and legal considerations

This publication has been prepared in good faith, however no representation, warranty, assurance or undertaking (express or implied) is or will be made, and no responsibility or liability is or will be accepted by BSI in relation to the adequacy, accuracy, completeness or reasonableness of this publication. All and any such responsibility and liability is expressly disclaimed to the full extent permitted by the law.

This publication is provided as is, and is to be used at the recipient's own risk.

The recipient is advised to consider seeking professional guidance with respect to its use of this publication.

This publication is not intended to constitute a contract. Users are responsible for its correct application.

© The British Standards Institution 2023
Published by BSI Standards Limited 2023

ISBN 978 0 539 12167 4

ICS 65.060.10

Compliance with a British Standard cannot confer immunity from legal obligations.

This British Standard was published under the authority of the Standards Policy and Strategy Committee on 31 October 2023.

Amendments/corrigenda issued since publication

Date	Text affected

Documents
Document Sharing Hub

Full document details: BS ISO 23316-5:2023

INTERNATIONAL STANDARD

ISO 23316-5

First edition
2023-10

Tractors and machinery for agriculture and forestry — Electrical high-power interface 700 V DC / 480 V AC —

Part 5: DC operation mode

Reference number
ISO 23316-5:2023(E)

Documents
Document Sharing Hub

© ISO 2023

Full document details: BS ISO 23316-5:2023

COPYRIGHT PROTECTED DOCUMENT

© ISO 2023

All rights reserved. Unless otherwise specified, or required in the context of its implementation, no part of this publication may be reproduced or utilized otherwise in any form or by any means, electronic or mechanical, including photocopying, or posting on the internet or an intranet, without prior written permission. Permission can be requested from either ISO at the address below or ISO's member body in the country of the requester.

ISO copyright office
CP 401 • Ch. de Blandonnet 8
CH-1214 Vernier, Geneva
Phone: +41 22 749 01 11
Email: copyright@iso.org
Website: www.iso.org

Published in Switzerland

© ISO 2023 – All rights reserved

Documents
Document Sharing Hub

Full document details: BS ISO 23316-5:2023

Contents

Page

Foreword ... **iv**

Introduction ... **v**

1 Scope ... **1**

2 Normative references ... **1**

3 Terms, definitions and symbols ... **1**
3.1 Terms and definitions ... 1
3.2 Symbols ... 2

4 System overview ... **3**
4.1 General ... 3
4.2 Operation with single CS ... 4
4.3 Operation with MCS ... 5

5 DC specification ... **8**
5.1 Voltage form and quality ... 8
5.1.1 System voltage: values and ranges ... 8
5.1.2 Voltage ripple ... 8
5.1.3 Continuous DC current ... 9
5.1.4 Peak current ... 9
5.1.5 Current specific communication parameters ... 10
5.1.6 Voltage dips and recovery time ... 10
5.1.7 Overvoltage protection ... 10
5.1.8 Overcurrent protection ... 10
5.1.9 System inductance ... 12
5.1.10 DC link capacitance ... 12
5.1.11 Y-capacitors, parasitic capacitances ... 13
5.1.12 DC Link pre-charging ... 13
5.2 DC link discharging procedure ... 15
5.2.1 General ... 15
5.2.2 Connection of MCS ... 15
5.3 Compatibility criteria for PS, HPI and load ... 16
5.3.1 Block diagram ... 16
5.3.2 Value ranges for system components: ... 17
5.3.3 Limitations on ripple current ... 17
5.3.4 Test methods ... 18
5.3.5 Ripple current in case of MCS ... 19
5.3.6 Limited operation of source-load(s) combinations with respect to ripple currents ... 20
5.3.7 Energy feedback ... 20
5.3.8 Functional requirements — Energy feedback over time ... 21
5.4 Overload protection ... 21

Annex A (informative) **Estimation methods for DC link film capacitors** ... **22**

Annex B (informative) **Technical details** ... **24**

Bibliography ... **36**

© ISO 2023 – All rights reserved

Documents
Document Sharing Hub

Full document details: BS ISO 23316-5:2023

Foreword

ISO (the International Organization for Standardization) is a worldwide federation of national standards bodies (ISO member bodies). The work of preparing International Standards is normally carried out through ISO technical committees. Each member body interested in a subject for which a technical committee has been established has the right to be represented on that committee. International organizations, governmental and non-governmental, in liaison with ISO, also take part in the work. ISO collaborates closely with the International Electrotechnical Commission (IEC) on all matters of electrotechnical standardization.

The procedures used to develop this document and those intended for its further maintenance are described in the ISO/IEC Directives, Part 1. In particular, the different approval criteria needed for the different types of ISO document should be noted. This document was drafted in accordance with the editorial rules of the ISO/IEC Directives, Part 2 (see www.iso.org/directives).

ISO draws attention to the possibility that the implementation of this document may involve the use of (a) patent(s). ISO takes no position concerning the evidence, validity or applicability of any claimed patent rights in respect thereof. As of the date of publication of this document, ISO had received notice of (a) patent(s) which may be required to implement this document. However, implementers are cautioned that this may not represent the latest information, which may be obtained from the patent database available at www.iso.org/patents. ISO shall not be held responsible for identifying any or all such patent rights.

Any trade name used in this document is information given for the convenience of users and does not constitute an endorsement.

For an explanation of the voluntary nature of standards, the meaning of ISO specific terms and expressions related to conformity assessment, as well as information about ISO's adherence to the World Trade Organization (WTO) principles in the Technical Barriers to Trade (TBT), see www.iso.org/iso/foreword.html.

This document was prepared by Technical Committee ISO/TC 23, *Tractors and machinery for agriculture and forestry*, Subcommittee SC 19, *Agricultural electronics*

A list of all parts in the ISO 23316 series can be found on the ISO website.

Any feedback or questions on this document should be directed to the user's national standards body. A complete listing of these bodies can be found at www.iso.org/members.html.

© ISO 2023 – All rights reserved
Documents
Document Sharing Hub
Full document details: BS ISO 23316-5:2023

Introduction

ISO 23316-1 describes the general purpose and structure of standards in the ISO 23316 series, including common elements and definitions shared within all parts of the ISO 23316 series.

The purpose of the ISO 23316 series is to provide design and application standards covering implementation of electrical high power interface with a nominal voltage of 700 VDC/480 VAC for agricultural and forestry machinery.

The ISO 23316 series specifies physical and logical interface requirements that provide interoperability and cross compatibility for systems and equipment operating at nominal voltages of 700 VDC/480 VAC.

The following are not within the scope of ISO 23316:

— service, maintenance, and related diagnostics;

— functional safety;

— control strategies for high power sources and loads;

— application-specific strategies and operational modes;

— component design;

— energy storage systems, e. g. super-capacitors or batteries;

— multiple electrical power sources supplying a common DC link.

It is permitted for partial systems or components to be compliant to the ISO 23316 series by applying all applicable requirements, e.g. for the plug, receptacle or inverters, on a tractor or implement.

NOTE If a DC-mode only HPI is provided, it is not necessary to comply with part 4 describing AC-mode, as it is not applicable. If an AC-mode only HPI is provided, it is not necessary to comply with this document, as it is not applicable.

© ISO 2023 – All rights reserved

Documents
Document Sharing Hub
Full document details: BS ISO 23316-5:2023

Documents
Document Sharing Hub

Tractors and machinery for agriculture and forestry — Electrical high-power interface 700 V DC / 480 V AC —

Part 5: DC operation mode

1 Scope

This document specifies measures applicable to the class B2 voltage DC bus of a supply system which is intended to power detachable electrical CS(s).

— electrical specification of the high power interface

— operating modes (e. g. initialization, normal operation, energy feedback, connect/disconnect procedures and disconnect in case of malfunction)

— Communication parameters (basic framework: signals, ranges, units, states of supply system and CS)

The document contains simplified electrical diagrams showing specific aspects of the required functionality.

2 Normative references

The following documents are referred to in the text in such a way that some or all of their content constitutes requirements of this document. For dated references, only the edition cited applies. For undated references, the latest edition of the referenced document (including any amendments) applies.

ISO 16230-1:2015, *Agricultural machinery and tractors — Safety of higher voltage electrical and electronic components and systems — Part 1: General requirements*

ISO 23316-1, *Tractors and machinery for agriculture and forestry — Electrical high-power interface 700 V DC / 480 V AC — Part 1: General*

ISO 23316-2, *Tractors and machinery for agriculture and forestry — Electrical high-power interface 700 V DC / 480 V AC — Part 2: Physical interface*

ISO 23316-3, *Tractors and machinery for agriculture and forestry — Electrical high-power interface 700 V DC / 480 V AC — Part 3: Safety requirements*

ISO/FDIS 23316-6:—[1)], *Tractors and machinery for agriculture and forestry — Electrical high power interface 700 V DC / 480 V AC — Part 6: Controls communication*

3 Terms, definitions and symbols

3.1 Terms and definitions

For the purposes of this document, the terms and definitions given in ISO 23316-1, ISO/FDIS 23316-6:— and the following apply.

1) Under preparation. Stage at the date of publication: ISO/FDIS 23316-6:2023.

© ISO 2023 – All rights reserved

Documents Document Sharing Hub
Full document details: BS ISO 23316-5:2023

ISO and IEC maintain terminology databases for use in standardization at the following addresses:

— ISO Online browsing platform: available at https://www.iso.org/obp

— IEC Electropedia: available at https://www.electropedia.org/

3.1.1
device under test
DUT
single component or combination of components as defined to be tested

[SOURCE: ISO 10605:2008, 3.3]

3.2 Symbols

$C_{DC\ src}$	DC link capacitance PS
$C_{DC\ ld}$	DC link capacitance CS
$C_{y\ ld}$	Y-Capacitor CS
$C_{y\ src}$	Y-Capacitor PS
L_{cab}	cable inductance
$L_{i\ src}$	inner source inductance
$R_{i\ src}$	inner source resistance
R_{cab}	cable resistance
R_{cont}	contact resistance
m	inverter modulation index representing the amplitude of the fundamental output voltage U_0 normalized by the DC supply voltage U_{DC}, so m= U_0/U_{DC}
ΔU	voltage ripple
C_{DC}	DC link capacitor
I_{pk}	peak current
I_{rms}	root mean square current
f_{sw}	switching frequency
min	minimum

© ISO 2023 – All rights reserved
Documents
Document Sharing Hub
Full document details: BS ISO 23316-5:2023

4 System overview

4.1 General

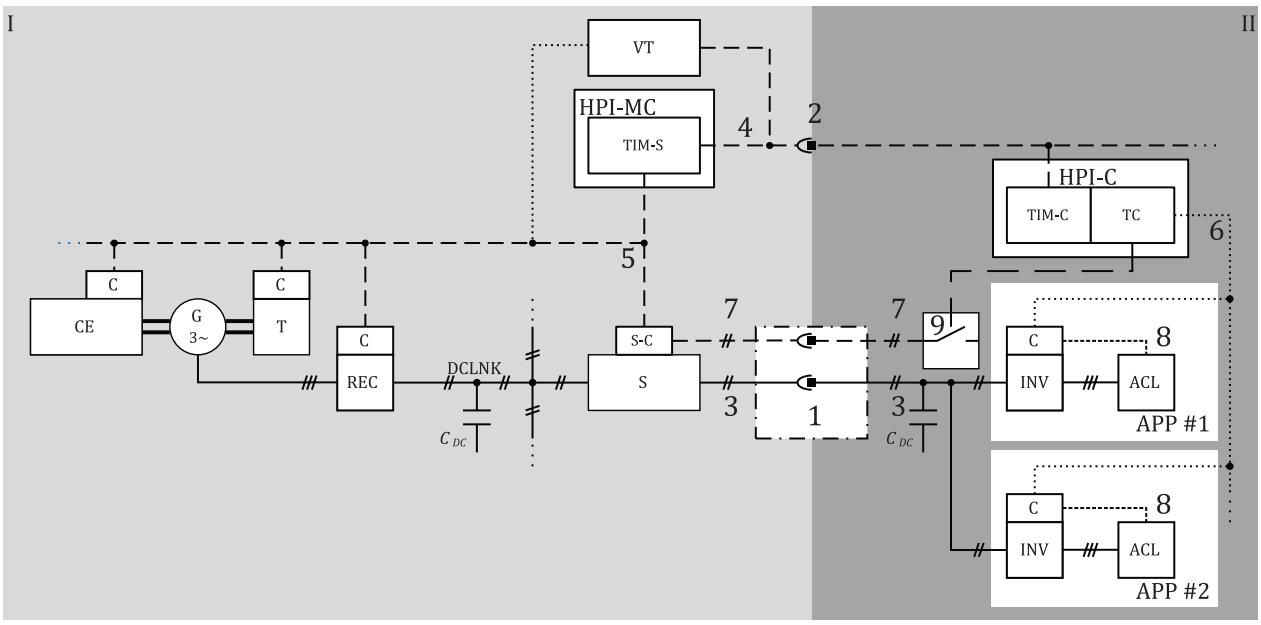

Key

ACL	AC load (e.g. electric motor)
APP	application
C	controller of a device
C_{DC}	DC link capacitor
CE	combustion engine
DCLNK	DC link
G	generator (as example of an electric power source)
HPI-C	High Power Interface - Control
HPI-MC	High Power Interface - Master Control
INV	inverter (DC/AC converter)
REC	rectifier (AC/DC power converter)
S	switch (contactor or solid state switch, including pre- and discharge unit)
S-C	switch controller
T	transmission
TC	task controller
TIM-C	Tractor Implement Management Client
TIM-S	Tractor Implement Management Server
VT	virtual terminal (user interface, e.g. display)
I	supply system
II	consumer system
1	high power interface
2	ISOBUS connector
3	power lines
4	ISOBUS
5	supply system communication bus (e.g. tractor bus)
6	consumer system communication bus (e.g. implement bus)

© ISO 2023 – All rights reserved

Documents
Document Sharing Hub
Full document details: BS ISO 23316-5:2023

7 interlock signal
8 feedback signal (by e.g. a sensor)
9 interlock signal line breaker
——— power connection
- — — - signal/bus connection
..... optional connection
═══ defines focus of document

Figure 1 — Exemplary system schematics

The system consists at least of an electrical PS with generator and control providing DC power on a DC link and a CS, which is connected by an HPI and communication line in accordance with ISO/FDIS 23316-6:—. System schematics are shown in Figure 1.

NOTE Depending on design, a discharge unit can be needed for implements.

The architecture of the load depends upon the specific application and can have any combination of resistive, inductive and capacitive elements. The common base is the voltage provided by the source (and specified in the subsequent chapters) and the communication interface according to ISO/FDIS 23316-6:—. A voltage source can have multiple HPIs.

The minimum VC-B2 system consists of at least one PS and one APP. The VC-B2 system is based on an IT system. Each implement may contain many different VC-B2 devices.

4.2 Operation with single CS

At the simplest level, only one CS (e.g. implement) is attached on the supply system (e.g. tractor), where the PS is located. The single CS can contain one or more independent VC-B2 devices. Such a configuration is shown in Figure 2 and is the basis for the following figures with MCS.

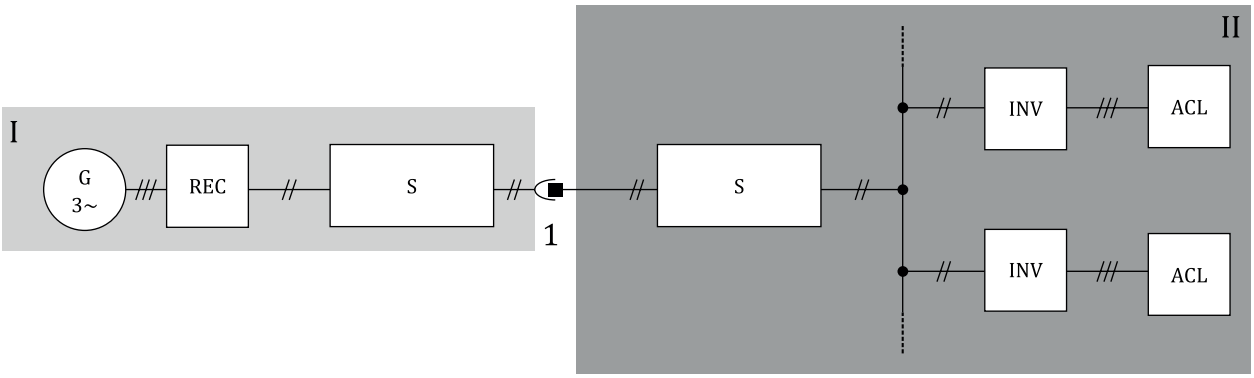

Key

ACL AC Load (e.g. electric motor)
G Generator
INV Inverter
REC Rectifier
S Pre- / discharge / disconnecting device
I supply system (e.g. tractor)
II consumer system (e.g. implement)
1 high power interface

Figure 2 — Single implement block diagram

© ISO 2023 – All rights reserved
Documents
Document Sharing Hub
Full document details: BS ISO 23316-5:2023

4.3 Operation with MCS

It is also possible to attach an MCS to a supply system (e.g. tractor). Each can contain one, or more VC-B2 devices. If an MCS is attached to one supply system, each CS needs its own HPI-C. Figures 4 to 6 show some, but not all possible, configurations.

The first supply system in the topology (typically located on tractor, or a PTO generator) shall provide the sum of the power of the connected CS. In case of power/current restrictions due to higher total demand compared to capabilities, one of these two load balancing options shall be used.

a) The HPI-MC shall control the power distribution of all other connected combinations.

b) The HPI-MC shall control the power distribution of the first supply system connected subsystems (which consist of several VC-B2 devices).

Figure 3 shows a configuration where several CS are attached on supply system, and each has its own HPI (maximum allowed number of implements in accordance with ISO 11783).

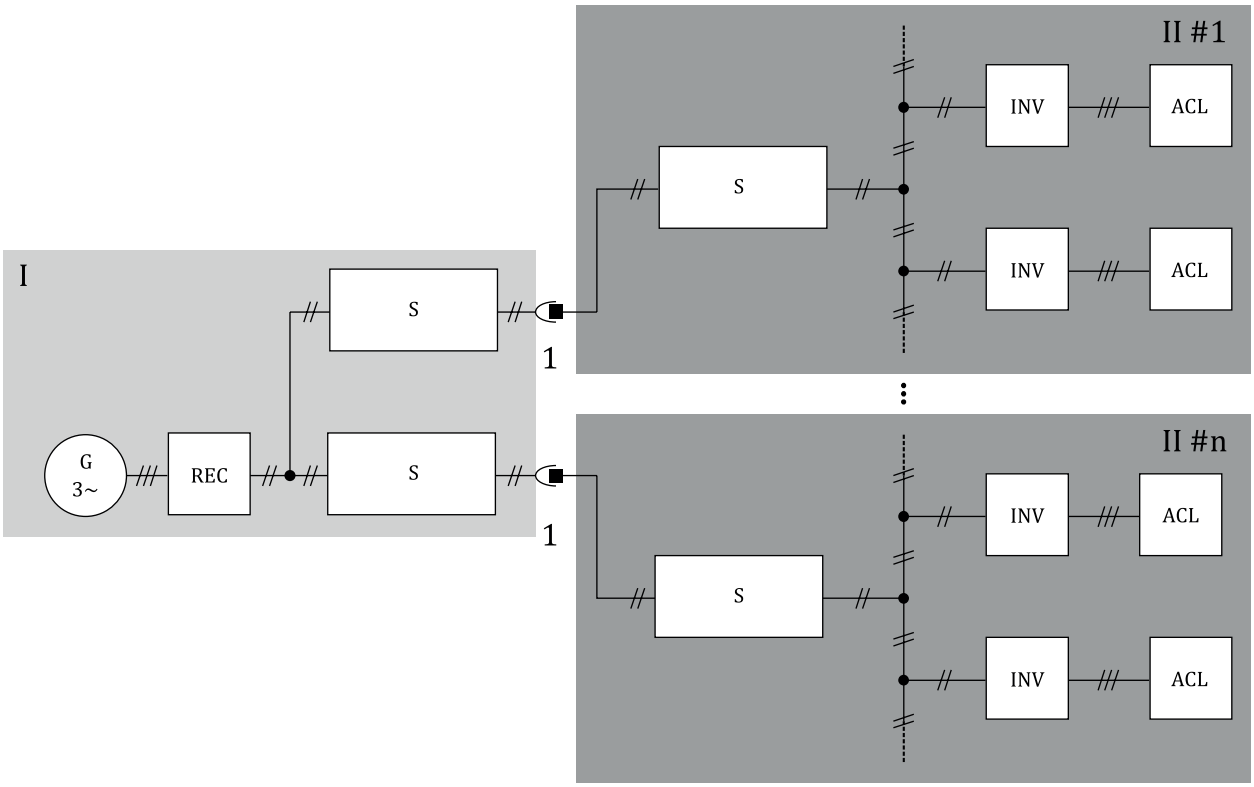

Key

ACL	AC load (e.g. electric motor)
G	generator
INV	inverter
REC	rectifier
S	pre-/discharge/disconnecting device
I	supply system (e.g. tractor)
II	consumer system (e.g. implement)
1	high power interface

Figure 3 — Configuration with several parallel CS each at a separate connector

Figure 4 shows a configuration where a CS is attached on supply system's front and several CS are attached on supply system's rear and each has its own HPI.

© ISO 2023 – All rights reserved

Documents
Document Sharing Hub
Full document details: BS ISO 23316-5:2023

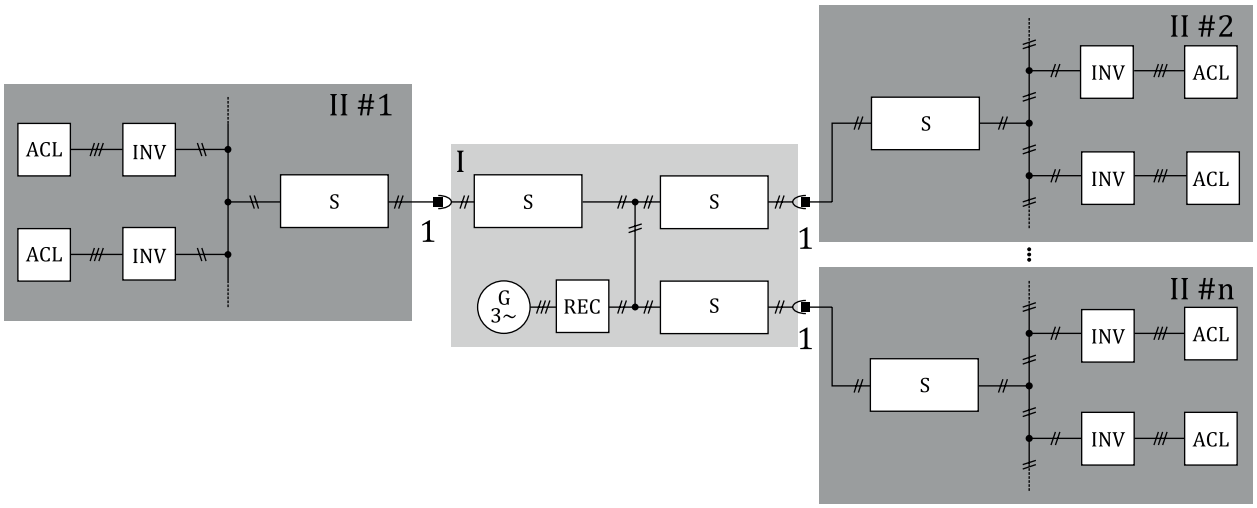

Key

ACL	AC Load (e.g. electric motor)
G	generator
INV	inverter
REC	rectifier
S	pre-/discharge/disconnecting device
I	supply system (e.g. tractor)
II	consumer system (e.g. implement)
1	high power interface

Figure 4 — Configuration with a front CS and several rear CSs each with a separate connector

Figure 5 shows a configuration where three CS are attached in series, thus only one tractor HPI is used and two CS are providing the HPI to the following one.

© ISO 2023 – All rights reserved
Documents
Document Sharing Hub
Full document details: BS ISO 23316-5:2023