BS ISO 23316-6:2024

BSI Standards Publication

Tractors and machinery for agriculture and forestry — Electrical high-power interface 700 V DC / 480 V AC

Part 6: Communication signals

Documents
Document Sharing Hub

Full document details: BS ISO 23316-6:2024

National foreword

This British Standard is the UK implementation of ISO 23316-6:2024.

The UK participation in its preparation was entrusted to Technical Committee AGE/6, Agricultural tractors and forestry machinery.

A list of organizations represented on this committee can be obtained on request to its committee manager.

Contractual and legal considerations

This publication has been prepared in good faith, however no representation, warranty, assurance or undertaking (express or implied) is or will be made, and no responsibility or liability is or will be accepted by BSI in relation to the adequacy, accuracy, completeness or reasonableness of this publication. All and any such responsibility and liability is expressly disclaimed to the full extent permitted by the law.

This publication is provided as is, and is to be used at the recipient's own risk.

The recipient is advised to consider seeking professional guidance with respect to its use of this publication.

This publication is not intended to constitute a contract. Users are responsible for its correct application.

© The British Standards Institution 2024
Published by BSI Standards Limited 2024

ISBN 978 0 539 12168 1

ICS 65.060.10

Compliance with a British Standard cannot confer immunity from legal obligations.

This British Standard was published under the authority of the Standards Policy and Strategy Committee on 31 March 2024.

Amendments/corrigenda issued since publication

Date	Text affected

Documents
Document Sharing Hub

Full document details: BS ISO 23316-6:2024

International Standard

ISO 23316-6

First edition
2024-01

Tractors and machinery for agriculture and forestry — Electrical high-power interface 700 V DC / 480 V AC —

Part 6: Communication signals

Tracteurs et matériels agricoles et forestiers — Interface électrique haute puissance 700VDC/480VAC —

Partie 6: Signaux de communication

Reference number
ISO 23316-6:2024(en)

© ISO 2024

Documents
Document Sharing Hub

Full document details: BS ISO 23316-6:2024

COPYRIGHT PROTECTED DOCUMENT

© ISO 2024

All rights reserved. Unless otherwise specified, or required in the context of its implementation, no part of this publication may be reproduced or utilized otherwise in any form or by any means, electronic or mechanical, including photocopying, or posting on the internet or an intranet, without prior written permission. Permission can be requested from either ISO at the address below or ISO's member body in the country of the requester.

ISO copyright office
CP 401 • Ch. de Blandonnet 8
CH-1214 Vernier, Geneva
Phone: +41 22 749 01 11
Email: copyright@iso.org
Website: www.iso.org

Published in Switzerland

Documents
Document Sharing Hub

Full document details: BS ISO 23316-6:2024

Contents

Page

Foreword ... **v**
Introduction ... **vi**
1 Scope ... **1**
2 Normative references ... **1**
3 Terms and definitions ... **2**
4 Voltage classes ... **3**
5 General system overview ... **4**
5.1 General ... 4
5.2 Basic AC-system topology ... 4
5.3 Basic DC-system topology ... 6
6 Communication process and system handshake ... **7**
6.1 System handshake phases ... 7
6.2 Conditions for system handshake ... 8
6.3 HPI connection status monitoring ... 8
6.4 Interaction with TIM function state machine ... 9
7 Fieldbus ... **13**
8 HPI interlock function ... **13**
8.1 Functional requirements ... 13
8.2 Functional principle ... 14
9 Fieldbus-based system ... **15**
9.1 Identification sequence using fieldbus ... 15
9.2 Initialization sequence using fieldbus ... 17
9.3 Normal operation sequence using fieldbus ... 19
9.4 Sequence definition for normal system shutdown using fieldbus ... 20
10 IL-based system ... **21**
10.1 Identification and initialization of an IL-based system ... 21
10.1.1 General ... 21
10.1.2 CS identification of an IL-based system ... 22
10.1.3 Identification procedure ... 22
10.1.4 Additional conditions ... 22
10.2 Determining the topology of the VC-B2 network of an IL-based system ... 24
10.3 System Initialization of an IL-based system ... 24
10.3.1 General ... 24
10.3.2 System handshake of an IL-based system ... 26
10.4 Sequence definition for normal start-up of an IL-based system ... 26
10.5 Sequence definition for normal system shutdown of an IL-based system ... 28
10.6 Sequence diagrams for system handshake of an IL-based system ... 29
11 Isolation resistance and insulation monitoring ... **33**
11.1 General ... 33
11.2 Communication ... 34
11.2.1 General ... 34
11.2.2 OIM initialization ... 34
11.2.3 Minimum isolation resistance initialization ... 34
11.2.4 Isolation resistance online measurement (operation of the completed system) ... 36
Annex A (normative) **Communication signals** ... **38**
Annex B (informative) **ISOBUS messages and message sets** ... **85**
Annex C (informative) **Example for determining the topology of the network** ... **87**
Annex D (informative) **Diagnostic trouble codes** ... **89**

© ISO 2024 – All rights reserved

AVA Documents
Document Sharing Hub

Full document details: BS ISO 23316-6:2024

Annex E (informative) **Example: Isolation resistance and insulation monitoring** **92**
Bibliography **94**

© ISO 2024 – All rights reserved

Documents
Document Sharing Hub
Full document details: BS ISO 23316-6:2024

Foreword

ISO (the International Organization for Standardization) is a worldwide federation of national standards bodies (ISO member bodies). The work of preparing International Standards is normally carried out through ISO technical committees. Each member body interested in a subject for which a technical committee has been established has the right to be represented on that committee. International organizations, governmental and non-governmental, in liaison with ISO, also take part in the work. ISO collaborates closely with the International Electrotechnical Commission (IEC) on all matters of electrotechnical standardization.

The procedures used to develop this document and those intended for its further maintenance are described in the ISO/IEC Directives, Part 1. In particular, the different approval criteria needed for the different types of ISO document should be noted. This document was drafted in accordance with the editorial rules of the ISO/IEC Directives, Part 2 (see www.iso.org/directives).

ISO draws attention to the possibility that the implementation of this document may involve the use of (a) patent(s). ISO takes no position concerning the evidence, validity or applicability of any claimed patent rights in respect thereof. As of the date of publication of this document, ISO had received notice of (a) patent(s) which may be required to implement this document. However, implementers are cautioned that this may not represent the latest information, which may be obtained from the patent database available at www.iso.org/patents. ISO shall not be held responsible for identifying any or all such patent rights.

Any trade name used in this document is information given for the convenience of users and does not constitute an endorsement.

For an explanation of the voluntary nature of standards, the meaning of ISO specific terms and expressions related to conformity assessment, as well as information about ISO's adherence to the World Trade Organization (WTO) principles in the Technical Barriers to Trade (TBT), see www.iso.org/iso/foreword.html.

This document was prepared by Technical Committee ISO/TC 23, *Tractors and machinery for agriculture and forestry, Subcommittee SC* 19*, Agricultural electronics*.

The document is intended to be used in conjunction with the ISO 11783 series and the other parts of ISO 23316.

A list of all parts in the ISO 23316 series can be found on the ISO website.

Any feedback or questions on this document should be directed to the user's national standards body. A complete listing of these bodies can be found at www.iso.org/members.html.

© ISO 2024 – All rights reserved

Documents
Document Sharing Hub

Full document details: BS ISO 23316-6:2024

Introduction

Due to the requirements of modern agriculture, the precise control of implement functions is a key issue in agricultural technology. The required precision is difficult to achieve with mechanical or hydraulic devices; it is more efficient to provide control with electric and electronic means, i.e. electric power and ISOBUS. The use of electric power allows implement manufacturers to offer farmers improved implements that provide a higher degree of automation and navigation, resulting in greater precision, better power distribution, and better controllability.

The purpose of the ISO 23316 series is to provide a design and application standard covering implementation of electrical high-power interfaces operating with a nominal voltage of 700 V DC/480 V AC for manufacturers of agricultural machinery.

The ISO 23316 series specifies the physical and logical interface requirements that provide interoperability and cross compatibility for systems and equipment.

Conformance to the ISO 23316 series means all applicable requirements from ISO 23316-1 to ISO 23316-7 are met.

It is permitted for partial systems or components to conform to the ISO 23316 series by applying all applicable requirements, for example, for the plug, receptacle, or inverters, on a tractor or an implement.

NOTE 1 If a DC-mode only HPI is provided, it is not necessary to conform with ISO 23316-4 which describes AC-mode, as it is not applicable. If an AC-mode only HPI is provided, it is not necessary to conform with ISO 23316-5 which describes DC-mode, as it is not applicable.

The ISO 23316 series defines an interface between a power providing device (supply system) and a power consuming device (consumer system), used within an automated electrified system in the agricultural industry. This series deals with electrical, mechanical and bus communication objectives and is used in conjunction with ISO 11783, which defines the ISOBUS. Figure 1 portrays the elements of typical equipment that involve the high-power interface.

The following aspects are not within the scope of ISO 23316:

— service, maintenance, and related diagnostics;

— functional safety;

— control strategies for high-power supplies and loads;

— application-specific strategies and operational modes;

— component design;

— energy storage systems, e. g. supercapacitors or batteries;

— multiple electrical power supplies to a common DC link.

NOTE 2 Annex D lists some basic diagnostics by DTCs.

NOTE 3 For example, AEF guideline 007 handles some aspects of functional safety already.

© ISO 2024 – All rights reserved

Documents
Document Sharing Hub
Full document details: BS ISO 23316-6:2024

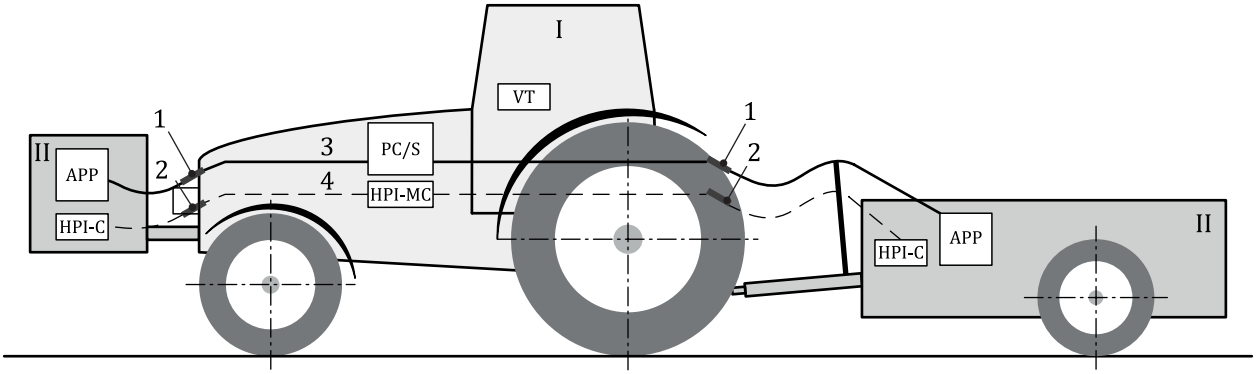

Key

Symbol	Description	Symbol	Description
APP	application	1	high-power interface
PC/S	power converter/switch	2	ISOBUS connector
HPI-C	high-power interface - control	3	power lines
HPI-MC	high-power interface - master control	4	ISOBUS
VT	virtual terminal (user interface)	————	power connection
I	supply system	— — — — .	signal connection
II	consumer system		

Figure 1 — Typical elements of system incorporating a high-power interface

© ISO 2024 – All rights reserved

Documents
Document Sharing Hub
Full document details: BS ISO 23316-6:2024

Documents
Document Sharing Hub

Tractors and machinery for agriculture and forestry — Electrical high-power interface 700 V DC / 480 V AC —

Part 6: Communication signals

1 Scope

This document specifies the communication interface, so that the transmitted parameters, signals and objects between a supply system (SS), with power converter/switch (PC/S) and high power interface – master control (HPI-MC) including the tractor implement management (TIM) server, and a consumer system (CS), with application (APP) and high power interface – control (HPI-C) including the TIM client and the task controller, can be used is in the agricultural industry. The mentioned signals are used during identification, initialization, operation, and shutdown modes of operation.

This document does not cover the definitions of suspect parameter numbers (SPNs) for the signals, within the parameter group numbers (PGNs) for messages and the message setup. These definitions are given in ISO 11783 and SAE J1939.

NOTE For information on messages (PGNs) see also Annex B.

2 Normative references

The following documents are referred to in the text in such a way that some or all of their content constitutes requirements of this document. For dated references, only the edition cited applies. For undated references, the latest edition of the referenced document (including any amendments) applies.

ISO 16230-1:2015, *Agricultural machinery and tractors — Safety of higher voltage electrical and electronic components and systems — Part 1: General requirements*

ISO 23316-1, *Tractors and machinery for agriculture and forestry — Electrical high-power interface 700 V DC / 480 V AC — Part 1: General description*

ISO 23316-2, *Tractors and machinery for agriculture and forestry — Electrical high-power interface 700 V DC / 480 V AC — Part 2: Physical layer*

ISO 23316-4:2023, *Tractors and machinery for agriculture and forestry — Electrical high-power interface 700 V DC / 480 V AC — Part 4: AC operation mode*

ISO 23316-5:2023, *Tractors and machinery for agriculture and forestry — Electrical high-power interface 700 V DC / 480 V AC — Part 5: DC operation mode*

ISO 23316-7, *Tractors and machinery for agriculture and forestry — Electrical high-power interface 700 V DC / 480 V AC — Part 7: Mechanical integration*

ISO 11783 (all parts), *Tractors and machinery for agriculture and forestry — Serial control and communications data network*

IEC 60204:2016, *Safety of machinery — Electrical equipment of machines*

SAE J1939DA, *Serial Control and Communications Heavy Duty Vehicle Network — Digital Annex*

© ISO 2024 – All rights reserved

Documents Document Sharing Hub
Full document details: BS ISO 23316-6:2024

3 Terms and definitions

For the purposes of this document, the terms and definitions given in ISO 23316-1, ISO 23316-2, ISO 23316-4, ISO 23316-5, ISO 23316-7 and the following apply.

ISO and IEC maintain terminology databases for use in standardization at the following addresses:

— ISO Online browsing platform: available at https://www.iso.org/obp

— IEC Electropedia: available at https://www.electropedia.org/

3.1
direction of rotation
positive values for frequency or speed related to powering the power converter phases in the sequence U V W positive torque means torque in the direction of positive speed

Note 1 to entry: If not stated otherwise (e.g. ground speed), the term 'speed' within this document refers always to rotational movement.

3.2
fieldbus maindevice
device integrated within inverter onboard supply system, controls actively the communication within the fieldbus network and requests/receives data to/from the *fieldbus subdevice* ((3.3), subordinated controller) in a cyclically and time-wise deterministic manner

3.3
fieldbus subdevice
device integrated within LLB on-board consumer system receives data (e.g. requests) from and provides data (e.g. feedback) to the *fieldbus maindevice* (3.2) passively

3.4
insulation monitor
IM
device monitoring the ungrounded system between an active phase conductor and the equipotential bonding

3.5
power converter/switch control
PC/S-C
control for AC mode, a power converter; for DC mode, a switch such as a contactor or solid-state switch, typically an integral part of the PC/S-C

3.6
minimum isolation resistance
MIR
value in failure free condition but at worst case ambient conditions (considering humidity, fluids, cooling type, etc. in operation)

3.7
multi consumer system
MCS
system of more than one consumer systems or consumer system trains, connected to the HPI in any combination of a series or parallel configuration

3.8
online insulation monitor
OIM
system to measure the overall system isolation resistance onboard of the initial supply system

© ISO 2024 – All rights reserved

Documents
Document Sharing Hub
Full document details: BS ISO 23316-6:2024

3.9
parameter group number
PGN
3-byte CAN Message, 24 bit, representation of the extended data page, data page, protocol data unit (PDU) format, and group extension (GE) fields

[SOURCE: ISO 11783-1:2017, 3.44]

Note 1 to entry: The parameter group number uniquely identifies a particular parameter group.

3.10
pre-charge procedure
capacitor charging procedure to balance different DC link voltage levels

3.11
pre- and discharge unit
unit to pre- or discharge the DC link connected via HPI, typically an integral part of the PC/S-C

3.12
supply system master
SS-M
supply system that includes the initial power source, such as generator/rectifier unit or fuel cell, commonly the tractor, typically the HPI-MC also resides there.

3.13
suspect parameter number
SPN
19-bit number used to identify a particular element, component, or parameter associated with a control function

[SOURCE: ISO 11783-1:2017, 3.58]

Note 1 to entry: Suspect parameter numbers are assigned to each individual parameter in a parameter group, and to items that are relevant to diagnostics but are not presently a parameter in a parameter group.

Note 2 to entry: See SAE J1939 definitions for more details.

4 Voltage classes

Table 1 indicates the range of voltages (as defined in ISO 23285).

Table 1 — Voltage classes

Voltage class	Maximum working voltage	
	V DC	V AC RMS
VC-A	0 < U ≤ 60	0 < U ≤ 30
VC-A1	0 < U ≤ 32	0 < U ≤ 21
VC-A2	32 < U ≤ 60	21 < U ≤ 30
VC-B	60 < U ≤ 1 500	30 < U ≤ 1 000
VC-B1	60 < U ≤ 75	30 < U ≤ 50
VC-B2	75 < U ≤ 1 500	50 < U ≤ 1 000
U = nominal voltage		

NOTE 1 The definition of RMS values in Table 1 is related to a pure sine wave form or the fundamental frequency of a modulated signal. The RMS value of a modulated signal may differ from them.

NOTE 2 Unipolar PWM is DC. Bipolar PWM is AC.

© ISO 2024 – All rights reserved

Documents
Document Sharing Hub
Full document details: BS ISO 23316-6:2024

5 General system overview

5.1 General

Initially, the basis for the communication between supply system (SS) and consumer systems (CSs), high power interface (HPI) controllers (shown in Figure 2 and Figure 3) shall use the ISOBUS as specified in the ISO 11783 series.

NOTE 1 High speed ISOBUS and other alternative communication media such as Automotive Ethernet and EtherCAT ™ 1) based technologies can be used but likely need an update to this document. For information, ISO technical committees TC 82, TC 23 and TC 127 are collaboratively working on high-speed secure communication interfaces.

NOTE 2 Topologies showed in this clause are only examples, implementations can differ from them (e.g. in number of interfaces).

If applicable, as basis for the communication between Power Converter/Switch Controller (PC/S-C) and application (APP)/load (shown in Figure 2), the fieldbus as defined in Clause 7 may be used.

The communication shall follow the TIM approach on ISOBUS.

NOTE 3 Advantage of this approach is using already defined measures like secure communication, usage of an existing automation state machine, etc. Refer to AEF guidelines 023 on automation and 040 on security for details.

NOTE 4 As diagnostics is not in scope, Annex D gives an informative overview of feasible DTCs.

5.2 Basic AC-system topology

Typically, an electric AC drive system consists of one Power Converter (PC, e.g. a three-phase inverter) within the SS which is connected to at least one Application (APP), in particular an AC-load (ACL), on the side of a CS via one HPI. A SS provides at least one HPI.

Application specific communication shall use ISOBUS, e.g. for transmission of working process data from implement (as CS) to tractor (as SS).

Load specific communication shall use the fieldbus for ACL identification and transmission of feedback. The fieldbus shall be a 1:1 connection, enabling reliable and unambiguous communication between Power Converter (PC) and load logical box (LLB).

NOTE The load specific communication between SS and CS is functionally necessary since there is a split in the electric drive between Power Converter PC and ACL.

1) EtherCAT ™ is a Tradename of Beckhoff, used as an example of a suitable product available commercially. This information is given for the convenience of users of this document and does not constitute an endorsement by ISO of this product.

© ISO 2024 – All rights reserved

Documents
Document Sharing Hub

Full document details: BS ISO 23316-6:2024

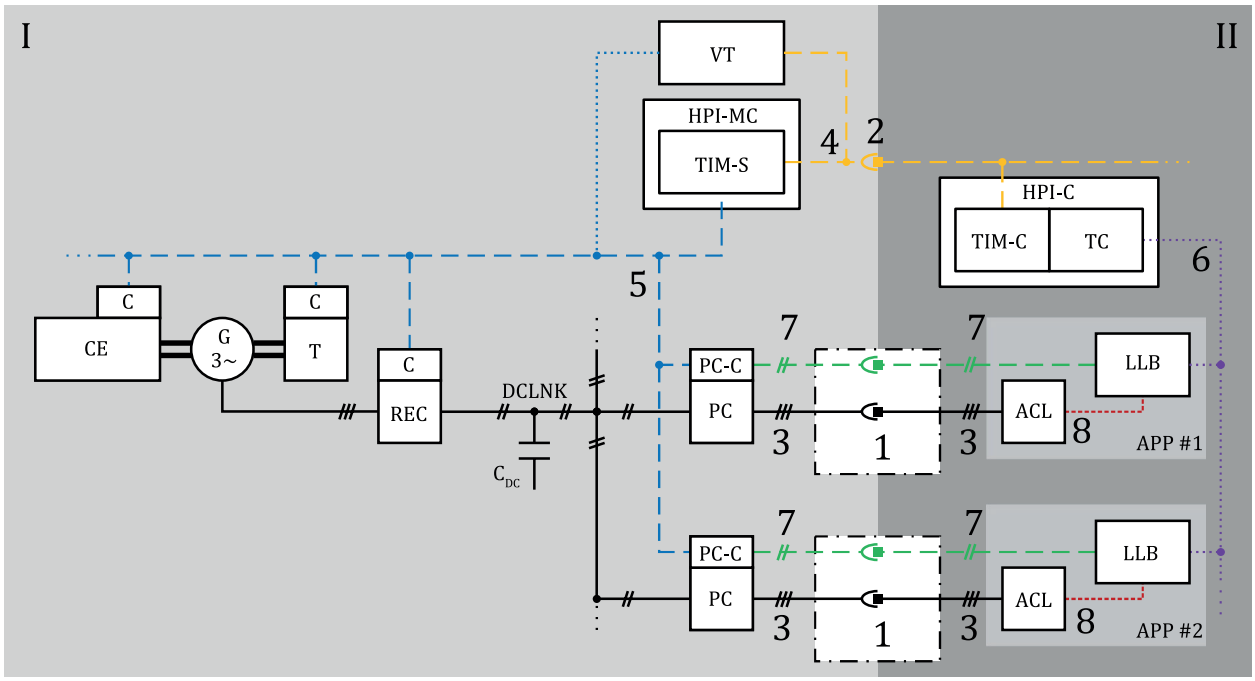

Key

Symbol	Description	Symbol	Description
————	power connection		
– – – –	signal/bus connection	.....	optional signal connection
I	supply system	II	consumer system
1	high-power interface	5 – – –	supply system communication bus (e.g. tractor bus)
2	ISOBUS connector	6	consumer system communication bus (e.g. implement bus)
3 ————	power lines	7 – – –	fieldbus (used also for interlock function)
4 – – –	ISOBUS	8	feedback signal (e.g. sensor signal)
ACL	AC-load (e.g. electric motor)	PC	(DC/AC) power converter
APP	application	PC-C	power converter controller
C	controller of a device	REC	rectifier (AC/DC power converter)
C_{DC}	DC link capacitor	T	transmission
CE	combustion engine	TC	task controller
DCLNK	DC link	TIM-C	tractor implement management - Client
HPI-C	HPI - control	TIM-S	TIM - server
HPI-MC	HPI – master control	VT	virtual terminal (user interface, e.g. display)
LLB	load logical box		

Figure 2 — AC-system topology example with two loads

The SS and CSs may include additional communication bus systems (as shown in Figure 2), these are not within the scope of this document.

The interaction (sequences for identification, initialization, operation and shutdown) between SS [including the Tractor Implement Management (TIM) server [2)] on-board, e.g. a tractor] and CS [including TIM client and Task Controller (TC) on-board e.g. an implement] is described in Clauses 6, 7 and 9 for fieldbus-based systems.

2) Depending on specific topologies, an implement can also be a server.

© ISO 2024 – All rights reserved

Documents
Document Sharing Hub
Full document details: BS ISO 23316-6:2024

The total number of TCs of a CS is not specified by the example in Figure 2, it is permitted to use a dedicated TC per APP.

5.3 Basic DC-system topology

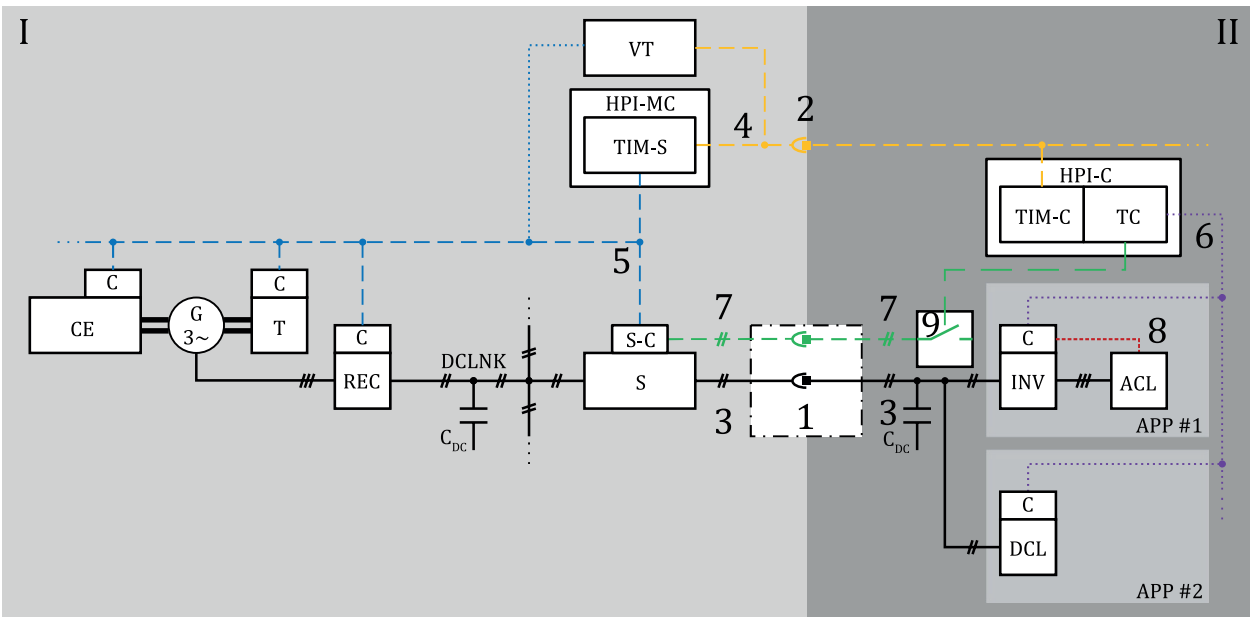

Key

Symbol	Description	Symbol	Description
————	power connection		
— — — —	signal/bus connection	.....	optional signal connection
I	supply system	II	consumer system
1	high-power interface (HPI)	6	consumer system communication bus (e.g. implement bus)
2	ISOBUS connector	7 — — —	interlock loop
3 ————	power lines	8 ----------	feedback signal (e.g. sensor signal)
4 — — —	ISOBUS	9	interlock signal line breaker
5 — — —	supply system communication bus (e.g. tractor bus)		
ACL	AC-load (e.g. electric motor)	REC	rectifier (AC/DC power converter)
APP	application	S	switch (contactor or solid-state switch, including pre- and discharge unit)
C	controller of a device	S-C	switch controller
CDC	DC link capacitor	T	transmission
CE	combustion Engine	TC	task controller
DCLNK	DC link	TIM-C	tractor implement management–client
HPI-C	high-power interface–control	TIM-S	tractor implement management–server
HPI-MC	high-power interface–master control	VT	virtual terminal (user interface, e.g. display)
INV	inverter (DC/AC power converter)		

Figure 3 — DC-system topology example with two loads

Typically, an electric DC drive consists of a switch (this includes a contactor or a solid-state switch and as well as a pre-/discharge device) that is connected with at least one APP (e.g. a three-phase inverter for

© ISO 2024 – All rights reserved

Documents
Document Sharing Hub
Full document details: BS ISO 23316-6:2024

a three-phase electrical machine) on the CS side via one HPI. A SS provides at least one HPI. A CS usually includes a DC-load (DCL). A CS may act as SS for a subsequent CS.

Application specific communication shall use ISOBUS, e.g. for transmission of working process data from implement (as CS) to tractor (as SS).

NOTE Load specific communication between SS and CS is not needed since there is no split in the electric drive (as shown in Figure 3: Split between INV and ACL in APP #1).

SS and CSs may include additional communication bus systems (as shown in Figure 3). These communication systems are not covered by this document.

The interaction (sequences for identification, initialization, operation and shutdown) between a SS (including the TIM server[3)] on-board e.g. a tractor) and a CS (including TIM client and TC on-board e.g. an implement) is described in Clauses 6, 8 and 10 for Interlock Loop (IL)-based systems.

The total number of TCs of a CS is not specified by the example in Figure 3, it is permitted to use a dedicated TC per APP.

6 Communication process and system handshake

6.1 System handshake phases

The system handshake determines the communication between the LLB, PC/S, HPI-MC, and HPI-C (see Clause 5 for details of the topologies and abbreviations). The system handshake consists of the following phases (see also Figure 4 and 5) after connecting the ISOBUS interface and the HPI:

a) identification;

b) initialization;

c) operation; and

d) shutdown.

NOTE 1 The “identification phase” is known in other industries (e.g. construction) as “discovery phase”.

NOTE 2 LLB is only used mandatorily in an AC-system per 5.2. In DC-systems, it is an option. Hence, the corresponding process steps are only needed if an LLB is applied.

The system handshake shall use the existing TIM function state machine. This will be defined in 6.4.

NOTE 3 For details on the TIM function state machine, see AEF 023 RIG3 (2023).

After address claiming on ISOBUS as common, the start-up sequence is split into the above mentioned two phases (more details see 6.4):

— The identification phase (see Figure 8), where the PC/S shall be assigned to the corresponding HPI-C:

  — For fieldbus-based systems, the sequence per Clause 9 shall be used, or

  — For IL-based systems, the sequence per Clause 10 shall be used.

— The initialization phase, where the PC/S shall receive:

  — Load-specific data from the LLB to initialize the PC/S subordinated controls (e.g. torque control), and

  — Application-specific data from the application ECU (specific HPI-C / TC or specific SS ECU) to initialize the higher-level controls (e.g. speed control).

3) Depending on specific topologies, an implement can also be a server.

© ISO 2024 – All rights reserved

Documents
Document Sharing Hub
Full document details: BS ISO 23316-6:2024

As a fallback if the identification processes per Clauses 9 and 10 are not supported or not successful, each SS HPI-C and CS HPI-C shall support a manual configuration page as it is defined by TIM for other applications as hydraulic interfaces.

NOTE 4 The manual configuration will be performed by the operator.

Generally, a system may have both, a fieldbus and an IL connection. If this applies, the fieldbus has a higher priority since it enables a higher number of functions and is used for operating the system. For details see ISO 23316-4:2023, 4.8.

NOTE 5 Inherently, a PC/S or an APP can have both, a fieldbus and an IL. It depends on the completed system which one is active finally.

6.2 Conditions for system handshake

It is a precondition that signals that are sent by the HPI-C to the PC/S and vice versa shall be routed via the ISOBUS through the HPI-MC and the SS communication bus.

Objects that are sent by the LLB to the PC/S and vice versa shall be always routed directly via the fieldbus (so this is a mandatory precondition for the clauses on fieldbus-based systems).

The whole 'electric drive' (consisting of PC/S and APP) shall be controlled by the HPI-C or in specific cases the HPI-MC via the TIM function state machine (at least for enabling/disabling, consider the different control modes per ISO 23316-4 and ISO 23316-5).

NOTE 1 The controlling instance - HPI-C or HPI-MC - will be chosen by the application control type per Table A.2. It defines two modes: "Implement-controlled" and "tractor-controlled". In the "implement-controlled" mode -as common – the CS's HPI-C requests as a TIM client a function of the TIM server at the SS. Whereas in the "tractor-controlled" mode – which is not common – the SS's HPI-MC requests the control of a function at the CS.

NOTE 2 The status of the TIM function state machine is reflected in the VT by the TIM automation states [see AEF 023 RIG3 (2023) Annex E.1 also].

CAN messages between PC/S-C and HPI-C shall include a command byte which is the (TIM) Function ID as representation of the PC/S address. This shall differentiate the PC/Ss onboard of a certain SS against each other.

NOTE 3 A similar approach is made within TIM for, e.g., tractor's hydraulic valves.

NOTE 4 The command byte can be understood as a multiplexer for this message. Within the message structure for the AC and DC modes, this and additional multiplexers are used for several purposes. For information on messages (PGNs), see Annex B.

The definitions of the CAN messages and the corresponding message sets shall be compliant to and documented in ISO 11783 and SAE J1939. Using transport protocol is an option for these messages.

The connection status of each HPI shall be monitored (see details in 6.3).

For each sent signal, the receiver shall send an acknowledgement as confirmation to the sender.

NOTE 5 Similar requirement exists in AEF 023.

6.3 HPI connection status monitoring

Each dedicated electrical HPI shall be monitored in respect of its dedicated connection status (connection via connector and cable between SS and CS) frequently, this is mentioned by interlock function. This check shall be performed while the connection status is "disconnected" also for determining an already inserted connector.

At least one of these two options of connection status monitoring shall be supported:

— IL-based monitoring, and

© ISO 2024 – All rights reserved

Documents
Document Sharing Hub
Full document details: BS ISO 23316-6:2024

— Fieldbus-based monitoring.

In fieldbus-based systems, the interlock function shall be provided by monitoring the fieldbus (for details, see Clauses 7 and 9).

In IL-based systems, the interlock function shall be provided by monitoring a dedicated physical interlock loop (for details, see Clauses 8 and 10).

If both, IL and fieldbus are available for monitoring the HPI connection status, a decision shall be made by the PC/S based on ISO 23316-4:2023, 4.8.3. This decision shall be valid from beginning of the identification phase.

NOTE 1 The physical interface as specified in ISO 23316-2 includes both, fieldbus and dedicated IL pins.

Consequently, a separate interlock function handling and handshake for each interface shall be applied.

NOTE 2 SS or CS internal interlock loops are not the focus of ISO 23316 series. So, the term interlock is used otherwise as common in automotive industry.

6.4 Interaction with TIM function state machine

This subclause defines the handshake sequence in general. It points out how the phases mentioned in 6.1 are interacting with the TIM function state machine.

a) As the TIM function state machine is in the state “(0) automation unavailable”, the transition into the state “(1) automation not ready” shall require in addition to the already defined conditions the connected status per HPI.

b) As the TIM function state machine is in the state “(1) automation not ready”, the transition into the state “(2) automation ready to enable” shall require in addition to the already defined conditions the identification of the APP (load) connected per HPI using fieldbus (LLB addressing) and IL (determination per Annex C) functionality. Consequently, a logical check is performed which kind of interlock is implemented and thus which operational modes are generally available.

c) As the TIM function state machine is in the state “(2) automation ready to enable”, the transition into the state “(3) automation enabled” shall require all the following in this specific sequence:

— For each connected HPI as result and reflection of the successful APP (load) identification, the HPI-MC assigns a TIM function ID per HPI and sends this assignment information by a destination specific message ‘TIM server to TIM client’ to the one specific CS HPI-C,

NOTE 1 Generally, an SS HPI-C can be combined with a PC/S-C and a CS HPI-C with a TC.

NOTE 2 One CS HPI-C can control several HPI. A CS (an implement) can contain several HPI-Cs.

— For each connected HPI, the CS HPI-C assigns control type and application control type (see Table A.2 in Annex A) to the corresponding SS HPI-C[4)] by sending a message ‘TIM client to TIM server’, this includes a logical check of possible and allowed modes by the SS HPI-C,

NOTE 3 As defined in Table A.2, the control type and the application control type are only set once, they will not change during operation.

— Optionally, the HPI-MC and the other HPI-Cs are communicating the needed parameters (see Table A.4) on the insulation resistance and monitoring per Clause 11,

— For each connected HPI which is using the fieldbus, the LLB sends the load specific initialization parameters (see Table A.11) to the PC/S-C, if needed the PC/S-C forwards initialization parameters to the corresponding SS HPI-C and the CS HPI-C,

4) In most cases, the SS HPI-C will be the HPI-MC. In topologies with implements connected in series, this statement is not valid.

© ISO 2024 – All rights reserved

Documents
Document Sharing Hub
Full document details: BS ISO 23316-6:2024

— For each connected HPI, the PC/S-C sends the needed reference values (see Table A.1) as required per chosen control type via SS HPI-C to the CS HPI-C,

It is recommended to set a quantity reference to '0' if not needed per chosen control type.

— For each connected HPI, the CS HPI-C sends the required initialization values (limits, thresholds etc. in Table A.2, Table A.5 - Table A.10, Table A.18 to Table A.20) per chosen control type to the corresponding SS HPI-C and vice versa this SS HPI-C forwards the needed initialization values per chosen control type to the corresponding CS HPI-C, if needed the SS HPI-C forwards initialization parameters to the PC/S-C,

— For each connected HPI, the specific controlling HPI-C of CS (TIM client) and SS (TIM server) provide the information on finished successful initialization.

d) As the TIM function state machine is in the state "(4) automation pending", the transition into the state to "(5) automation active" shall require no additional action as already defined.

e) As the TIM function state machine is in the state "(5) automation active", for each HPI, the CS HPI-C shall start sending the target values to the corresponding SS HPI-C for starting operation and vice versa the SS HPI-C (PC/S-C) shall start sending actual values as feedback to the CS HPI-C.

Changing the control type and the application control type shall require the deactivation of the HPI and a complete reinitialization process including stepping back the TIM function state machine.

Figure 4 shows the sequence diagram for a fieldbus-based system. This can also be adapted to an IL-based system while ignoring the fieldbus specific and adding IL-specific tasks (see Figure 5). These figures are not including the insulation resistance initializing and monitoring related communication.

© ISO 2024 – All rights reserved

Documents
Document Sharing Hub
Full document details: BS ISO 23316-6:2024

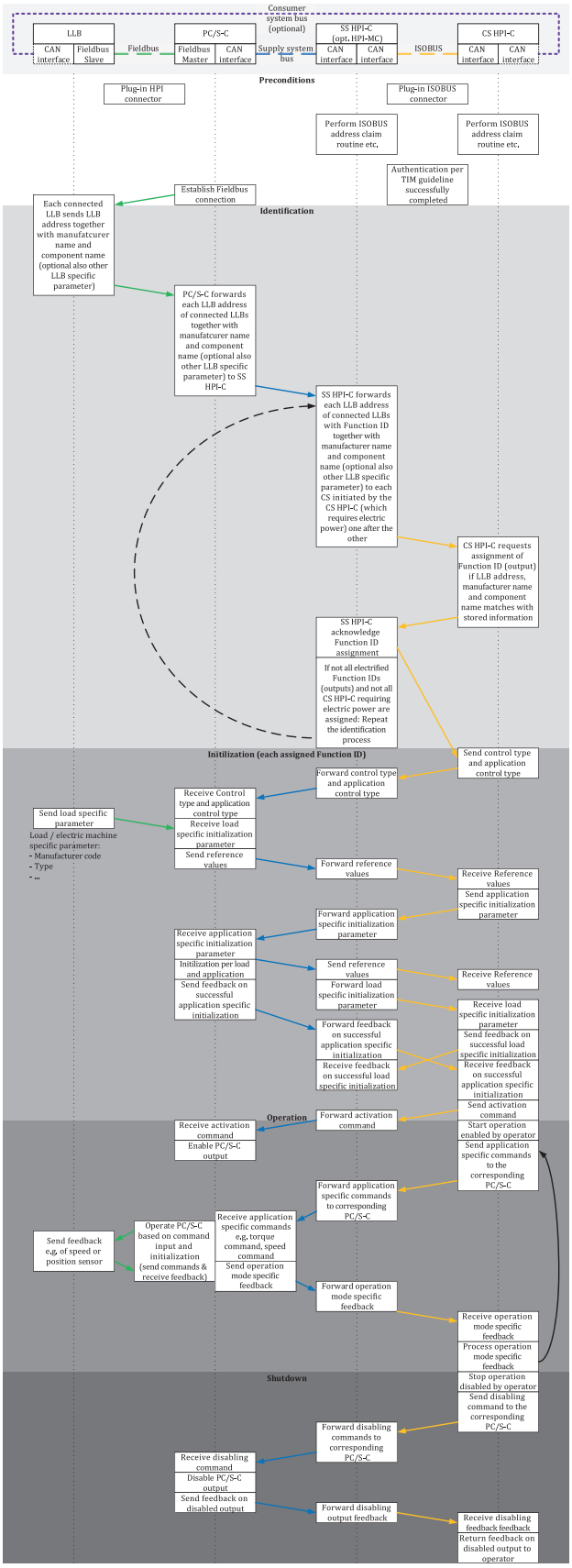

Figure 4 — Sequence diagram for a fieldbus-based system without insulation monitoring (see ISO 23316-6DA)

© ISO 2024 – All rights reserved

Documents
Document Sharing Hub
Full document details: BS ISO 23316-6:2024

NOTE 4 For details on fieldbus-based systems, see Clauses 7 and 9. For the handshake specifically, see Clause 9. For detailed sequence diagrams, see Figures 8 to 11. For insulation monitoring, see Clause 11.

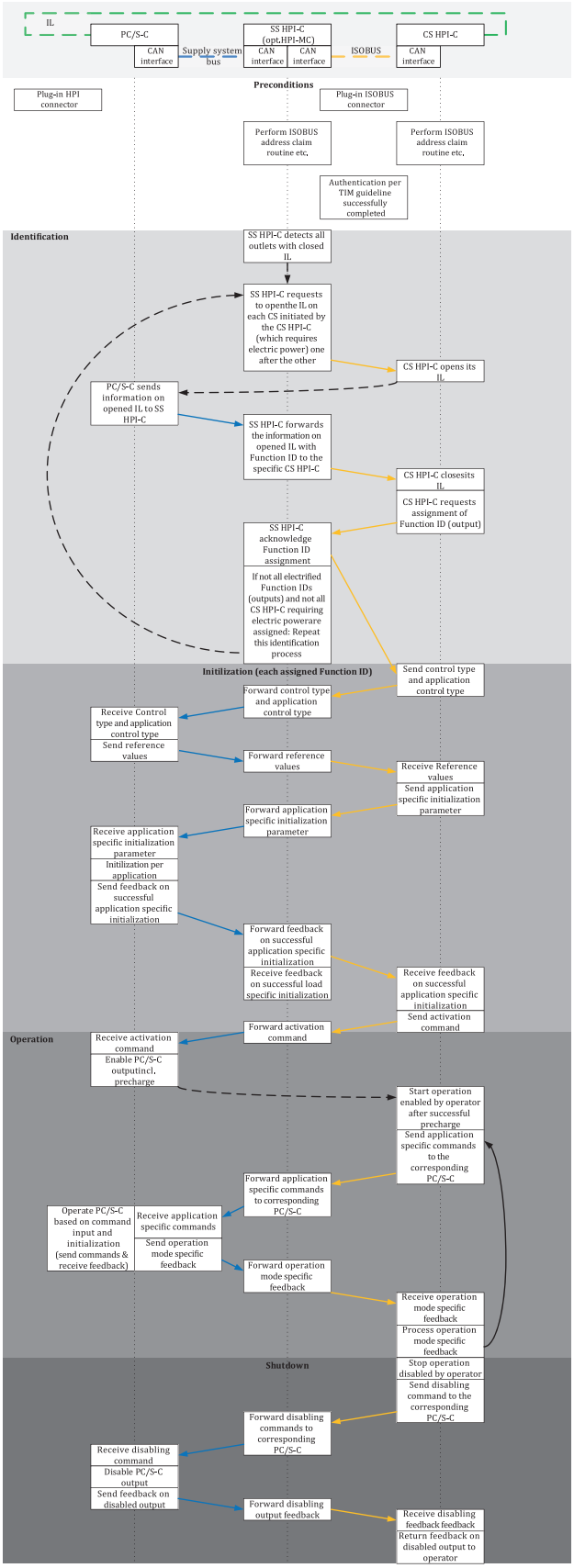

Figure 5 — Sequence diagram for an IL-based system without insulation monitoring (see ISO 23316-6DA)

© ISO 2024 – All rights reserved

Documents
Document Sharing Hub
Full document details: BS ISO 23316-6:2024

NOTE 5 For details on IL-based systems, see Clauses 8 and 10. For the handshake specifically, see Clause 10. For detailed sequence diagrams, see Figures 17 to 20. For insulation monitoring, see Clause 11.

7 Fieldbus

The fieldbus shall use EtherCAT as described in ISO 23316-4:2023, Clause 5 for the high-speed communication between SS and CS: The PC/S-C acts as the fieldbus maindevice and the LLB acts as a fieldbus subdevice.

NOTE The necessary data definitions (feedback values such as rotor position, rotor speed, winding temperature, and initialization values) are listed in A.2.2.

8 HPI interlock function

8.1 Functional requirements

The dedicated interlock signal shall only be used for the following functions:

— determination of AC system topology using open-loop control modes per ISO 23316-4 and a DC system topology per ISO 23316-5, and

— monitoring the HPI connection status by the SS (e.g. fault detection caused by an unintended disconnect) for the mentioned topologies.

AC systems topology using open-loop control modes may use one of the following options:

— Field-bus based system, or

— IL-based system.

In case of any interruption of the interlock signal, the VC-B2 power shall be turned off by the SS in accordance with the guidance given by ISO 16230-1:2015, 6.2.

© ISO 2024 – All rights reserved

Documents
Document Sharing Hub
Full document details: BS ISO 23316-6:2024

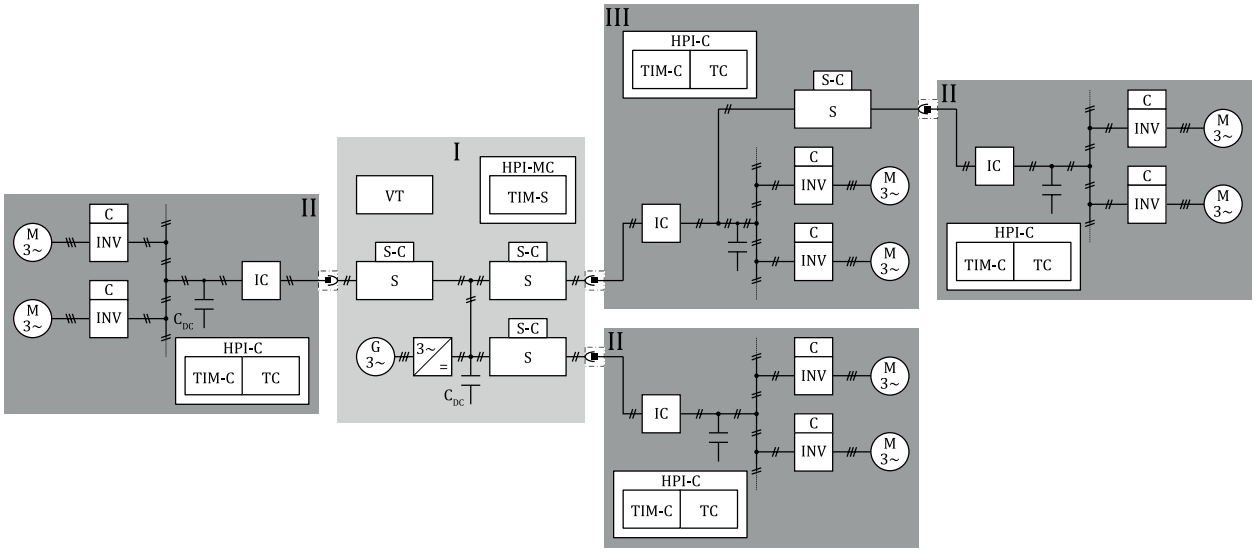

Key

Symbol	Description	Symbol	Description
I	supply system	II	consumer system
III	consumer and supply system	S	switch (contactor or solid-state switch, including pre- and discharge unit)
C	controller of a device	S-C	switch controller
HPI-C	high-power interface - control	TC	task controller
HPI-MC	high-power interface – master control	TIM-C	tractor implement management - client
IC	input circuit	TIM-S	tractor implement management - server
INV	inverter (DC/AC power converter)	VT	virtual terminal (user interface, e.g. display)

Figure 6 — Simplified topology example for a SS with multiple CSs and multiple HPIs

If IL interruption is monitored before pre-charge is started, the pre-charge shall not be performed.

NOTE 2 Electric units on the SS and CS are part of their own machine interlock loops if applied; they do not include or interfere with the HPI interlock loop.

In cases of multiple implements, the interlock handling and hardware handshake shall be performed between each HPI (first implement with second implement, second implement with third implement, and so on). See topology example in Figure 6.

8.2 Functional principle

Figure 7 shows the functional principle. The illustrated IL-switch on the SS side has following functions:

— When the internal check on the CS side is faultless, the IL-switch shall be closed.

— If more than one HPI is used on the tractor-implement-combination and more than one CS is connected, each SS shall identify the CS, which is connected to the relevant physical HPI via demanding the toggling of IL-switch (identification procedure is described in Clause 10).

— In series to the IL-switch a resistance R_{IL} = 1 kΩ ±10 % shall be connected.

© ISO 2024 – All rights reserved

Documents
Document Sharing Hub
Full document details: BS ISO 23316-6:2024

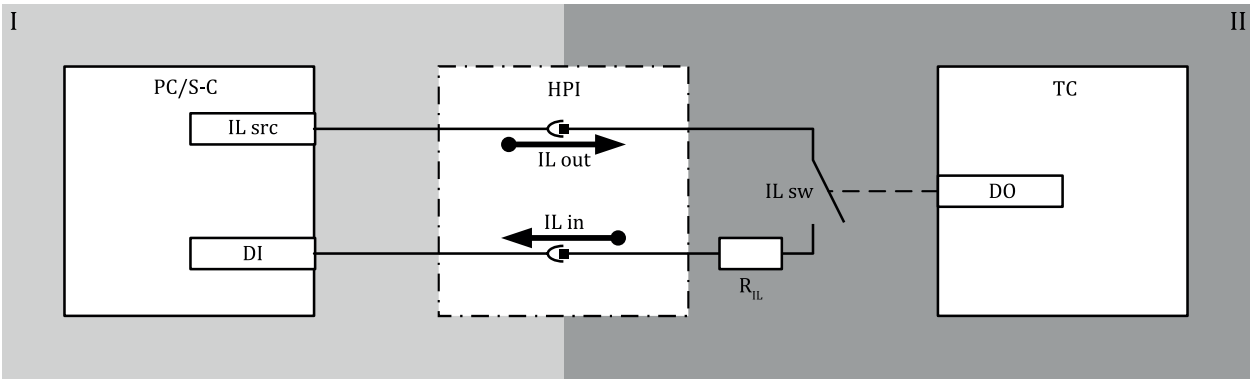

Key

Symbol	Description	Symbol	Description
I	supply system	II	consumer system
DI	digital input	IL in	interlock input
DO	digital output	IL out	interlock output
HPI	high power interface	IL src	interlock source
PC/S-C	power converter/switch controller	IL sw	interlock switch
TC	task controller	R_{IL}	IL circuit resistance

Figure 7 — Example of an IL circuit (simplified)

NOTE The physical location of the PC/S-C or TC can differ, it could be included in the HPI-MC for the S-C, HPI-C for the TC or in another separate controller.

9 Fieldbus-based system

9.1 Identification sequence using fieldbus

See Figure 8 for this specific part of the sequence (as excerpt from Figure 4).

The following kind of identification and use of a command byte is required while potentially several loads/application ECUs with a certain number of drives are attached at the power supply.

As preconditions:

— A specific fieldbus address is required per LLB within a CS (see Annex A).

— A specific unique fieldbus address is required per PC/S[5)].

The PC/S is connected to the HPI-C via source bus, HPI-MC, and ISOBUS.

NOTE 1 The inverter, as fieldbus maindevice, sends out data packages cyclically while activated (kind of data request), independently of whether a fieldbus subdevice is connected or not. If a fieldbus subdevice is connected, it responds by sending its data.

While the fieldbus connection is established between LLB and PC/S, the identification sequence shall be started. Hence, the fieldbus maindevice (PC/S onboard of SS) shall check the load/electric machine manufacturer code, the load/electric machine code and the LLB address (fieldbus subdevice onboard CS) in the standard data package (see Table 2).

5) The generic system, without designation as AC or DC system, uses PC/S. An AC system uses a PC. The DC uses an S. From a basic function perspective this is equivalent.

© ISO 2024 – All rights reserved

Documents
Document Sharing Hub
Full document details: BS ISO 23316-6:2024

Table 2 — Fieldbus data package

Data package	Fieldbus index	Content	Reference
Standard	0	Identification Feedback	Table A.11 Table A.12
	1	General	Table A.13
Enhanced	2 or 3 or 4	Electric machine characteristics: IM PM RM	Table A.14 Table A.15 Table A.16

The PC/S shall request at the LLB the content of data of 'Fieldbus index 1' (see Annex A).

The PC/S shall send the load/electric machine manufacturer code (shortly: manufacturer name in Figure 8), the load/electric machine code (shortly: component name in Figure 8) and the LLB address on ISOBUS as a broadcast message (includes the (TIM) function ID).

The HPI-C / TC[6)] shall know the architecture of the CS (using an internal data storage) and shall compare the LLB-specific data received from the PC/S against each other. Consequently, on a successful comparison, the HPI-C shall assign its APP (for example in an AC topology: ACL with LLB per Figure 2) with the (TIM) function ID.

NOTE 2 (TIM) Function ID is the representation of the corresponding inverter within ISOBUS messages.

NOTE 3 Spreadsheets with the required parameters are given in Annex A.

NOTE 4 All sequence diagrams in this clause indicate sequential behaviour mostly indicated by the arrows in between. If blocks are positioned horizontally together without arrows, parallel processing is assumed. If blocks are positioned vertically together without arrows, serial processing from top-down is assumed.

6) The HPI-C/TC of the CS knows its own architecture and setup, as well as the related information of electric load(s) onboard of its own to compare this with the "feedback" received via ISOBUS. These data may be sent via the CS bus directly from the LLB to the HPI-C / TC, or it is stored in the HPI-C / TC non-volatile memory.

© ISO 2024 – All rights reserved

Documents
Document Sharing Hub
Full document details: BS ISO 23316-6:2024

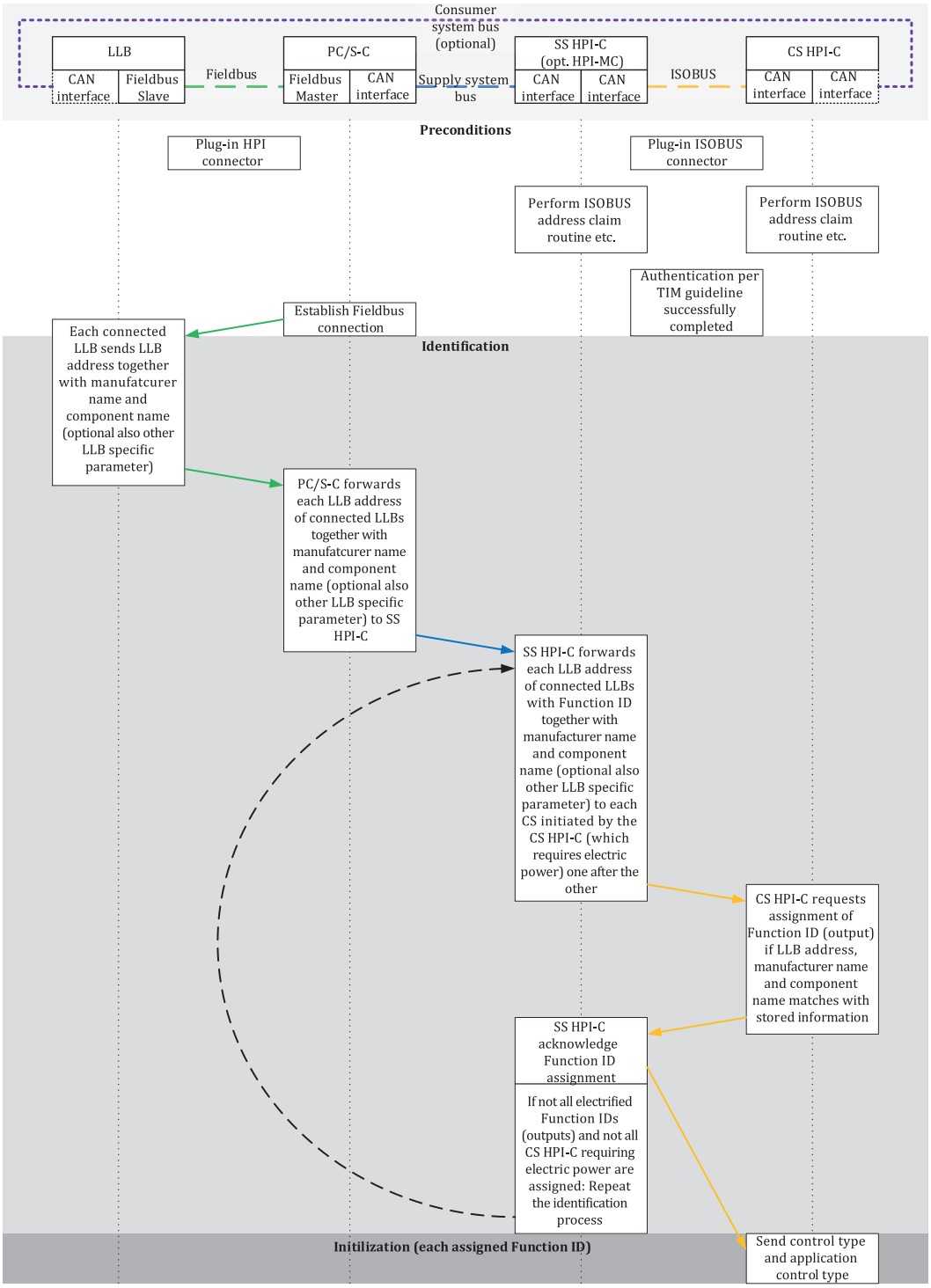

Figure 8 — Identification phase of a fieldbus-based system

9.2 Initialization sequence using fieldbus

See Figure 9 for this specific part of the sequence (as excerpt from Figure 4).

In response to the assignment in the identification sequence, the LLB-corresponding HPI-C shall start to send the application specific objects for PC/S initialization (incl. application type):

a) The application type shall be processed.

b) Then the control type shall be processed.

© ISO 2024 – All rights reserved

Documents
Document Sharing Hub
Full document details: BS ISO 23316-6:2024

For both see Table A.2.

Based on the application type set by the HPI-C/TC and the control mode set by the HPI-C/TC, the PC/S shall perform its initialization.

Table 3 — Allowed control modes per ISO 23316-4

Load type	Open-loop control (see ISO 23316-4:2023, 4.4.2 and 4.7.3)			Closed-loop control (see ISO 23316-4:2023, 4.4.1 and 4.7.2)	
	V/f characteristic (see ISO 23316-4:2023, 4.7.3.2)	Independent AC supply (see ISO 23316-4:2023, 4.7.3.3)	Variable DC supply (see ISO 23316-4:2023, 4.7.3.4)	Torque (see ISO 23316-4:2023, 4.7.2.1)	Speed (see ISO 23316-4:2023, 4.7.2.2)
General load	x	x	x	—	—
Electric machine	x	x	—	x	x

NOTE 1 A general load could be a motor, solenoid, heater, or light.

In the standard data package, the PC/S shall check the following (see Annex A):

— Load/electric machine manufacturer code,

— Load/electric machine code, and

— Load/electric machine type.

If a closed-loop control mode is chosen, the PC/S shall be initialized by the electric machine characteristic parameters first. Therefore, the inverter shall use

— internally saved data (load / electric machine manufacturer code and load / electric machine code can enable a search in a data pool for predefined closed-loop control parameters), or

— request the needed parameters at the LLB dependent on the electric machine type (see Table A.9, Table A.10 and Table A.11).

The initialization of open-loop control modes shall only be based on parameters received from the HPI-C / TC.

NOTE 2 Spreadsheets with the initialization parameters vs. the operational/control mode are given in Annex A.

NOTE 3 The signal ‘Control type’ in Table A.2 allows customized modes too. The needed signals and message sets need collaboration between the partnering manufacturers of CS and SS. It enables flexibility for non-standard use cases of the HPI.

© ISO 2024 – All rights reserved

Documents
Document Sharing Hub
Full document details: BS ISO 23316-6:2024

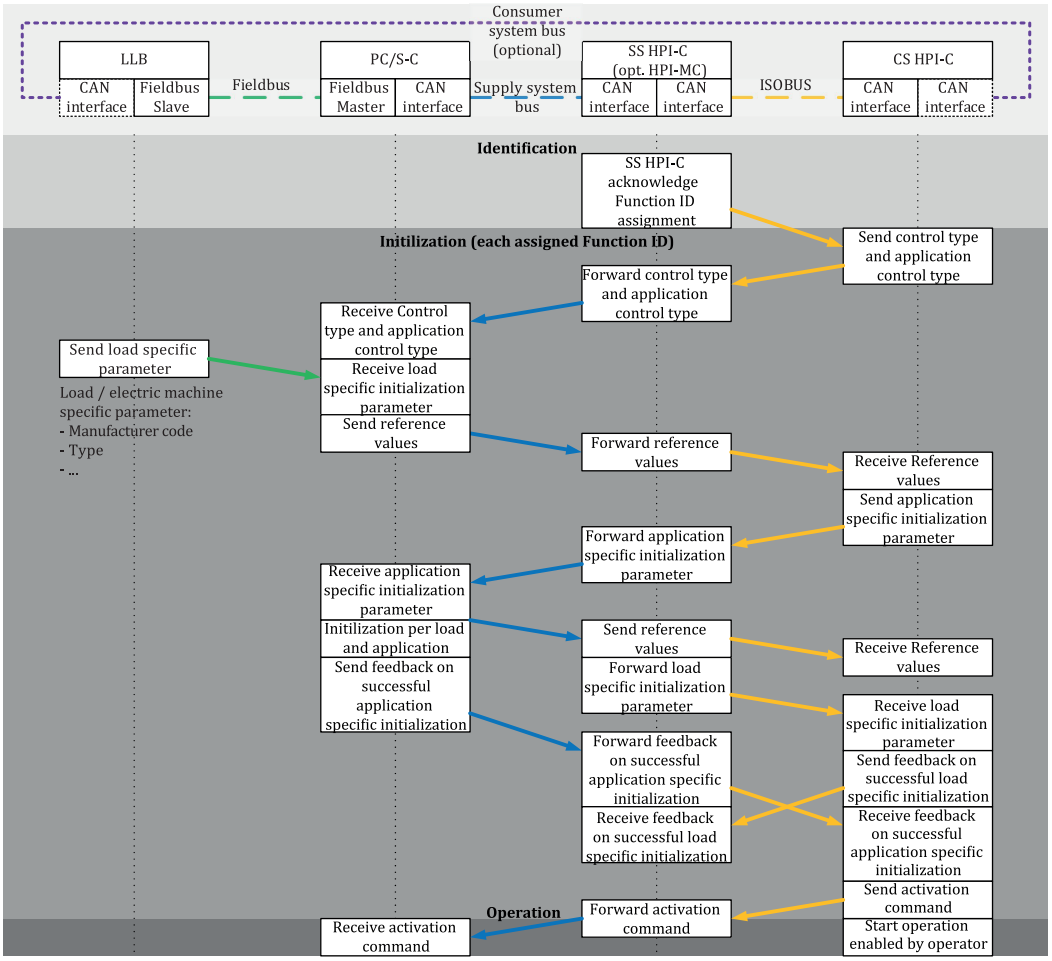

Figure 9 — Initialization phase of a fieldbus-based system

The reference values shall be set at the beginning of the initialization phase by the PC/S in coordination with the values transmitted via fieldbus from the LLB.

A change of the application type, the control mode, or the reference values while in operation ("on the fly") shall not be possible. Whereas a change of other process-specific limits or characteristics (e.g. maximum speed or torque slope) shall be possible.

9.3 Normal operation sequence using fieldbus

See Figure 10 for this specific part of the sequence (as excerpt from Figure 4).

After successful initialization of the controls, the drive shall be ready to be enabled by the operator. The enabling process of an electric drive shall generally follow the common ISOBUS process (per ISO 11783) as defined for hydraulic drives.

The HPI-C/TC shall send control parameters and cyclical commands (e.g. speed target value) to the inverter (per operational mode Table A.2 in of Annex A). Thus, the PC/S shall start to operate in the desired mode.

NOTE 1 Basically, the HPI-C/TC is assumed as the automation process controller, which is the source of commands to the actuator, in particular the inverter.

During normal operation, the HPI-C/TC shall repeat the commands per mode periodically as defined per operational mode in Annex A. The PC/S shall send periodically feedback as defined per operational mode in Annex A to the HPI-C/TC.

© ISO 2024 – All rights reserved

Documents
Document Sharing Hub
Full document details: BS ISO 23316-6:2024

The PC/S shall request periodically via fieldbus the required feedback signals as defined per operational mode in Annex A from the LLB. The LLB shall send them as answer periodically back to the PC/S.

NOTE 2 The repetition rates on ISOBUS and on fieldbus are independent. Usually the feedback loops are asynchronous, and the repetition rate on fieldbus is much higher than that of ISOBUS.

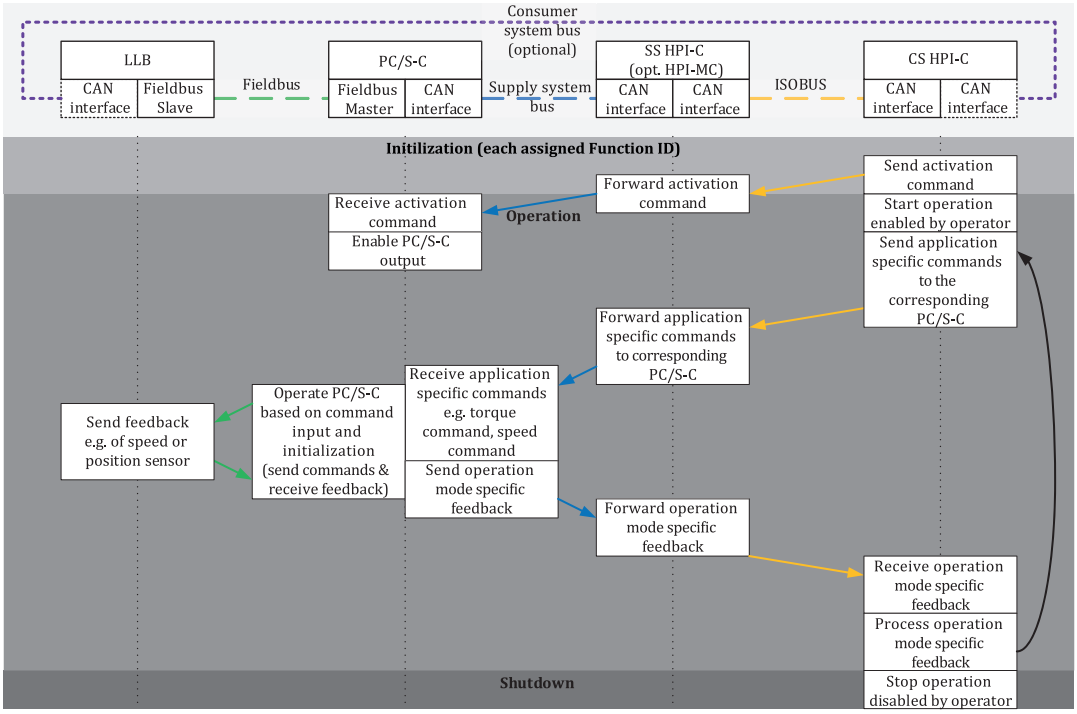

Figure 10 — Normal operation phase of a fieldbus-based system

9.4 Sequence definition for normal system shutdown using fieldbus

Figure 11 describes the normal system shutdown part of the sequence (as excerpt from Figure 4).

When the operator wants to disable the application, the HPI-C/TC shall bring the application into a convenient shutdown condition (dependent on the application this can be, e.g. speed = 0 or torque = 0). After achieving the shutdown state, it shall send the disabling command to the PC/S which the PC/S shall then disable its output. On successfully disabling its output, the PC/S shall send a feedback signal to the HPI-C/TC indicating the disabled state.

While receiving this PC/S feedback signal, the HPI-C/TC shall acknowledge the disabled output to the operator, e.g. by a status signal in the VT.

NOTE Independent of the controlled shutdown as defined above in this clause, is a potential “hard” shutdown caused by, e.g., an application or by an inverter fault/error. For resetting, an interaction with the operator is necessary.

© ISO 2024 – All rights reserved

Documents
Document Sharing Hub
Full document details: BS ISO 23316-6:2024

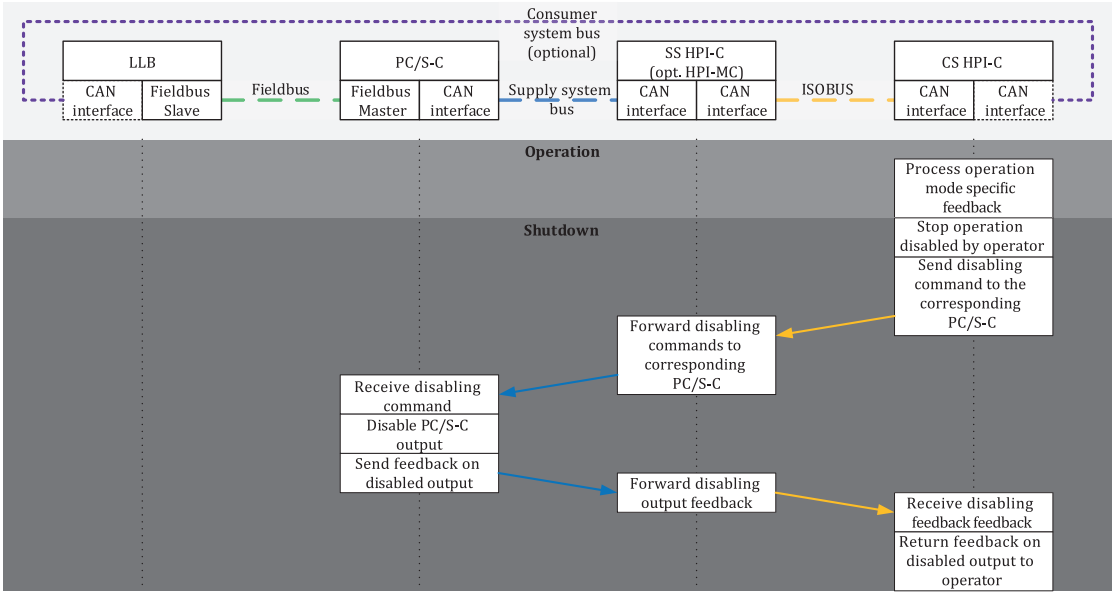

Figure 11 — Shutdown phase of a fieldbus-based system

10 IL-based system

10.1 Identification and initialization of an IL-based system

10.1.1 General

VC-B2 systems shall use special identification and initialization procedures, which are described in this clause.

The (TIM) Function ID shall represent the address of each HPI-C.

The knowledge of the overall topology of the VC-B2 network is necessary to initiate initialization and pre-charge operations in the right sequence. The identification of the topology consists of two steps:

1) CS identification (see 10.1.2)

2) Determine the topology of VC-B2 network (see Annex C)

The maximum number of topology levels (determined by Annex C) shall be 4.

When topology is determined, every HPI-MC/HPI-C shall get knowledge of its position in the VC-B2 network. Additionally, the CS shall get the information, if it acts as CS only or if it acts also as SS for one or more connected CSs (see also example in Figure 6).

After the identified combinations of SS and CS exchange their electrical capabilities during initialization procedure (see 10.3), the power connection between SS and CS shall be activated. After successful pre-charge procedure, the APP shall be ready to be activated.

If a CS is acting as the SS for a succeeding CSs, the above defined sequence of activation and pre-charge shall be repeated for each of such HPI.

NOTE All flow charts in this clause indicate sequential behaviour. Timing is indicated by arrows connecting the elements. Vertical position does not reflect timing due to limited space in the document.

© ISO 2024 – All rights reserved

Documents
Document Sharing Hub
Full document details: BS ISO 23316-6:2024

10.1.2 CS identification of an IL-based system

The procedure as described below is used to determine the unambiguous assignment of connected HPI (receptacle and plug).

The procedure shall identify the CS based on toggling of the IL-switch (which is located on the side of CS). Based on the toggling of the IL-switch, the procedure shall identify the connected CS:

— Starting point is the unknown topology of the VC-B2 network.

— The following preconditions are considered:

  — HPI-MC and HPI-C shall have addresses according to address claiming procedure on the ISOBUS in accordance with ISO11783-5. Thereby all nodes of the built-up network shall be known.

  — The IL through the HPI shall be closed by default (does not include open states due to e.g. identified failures).

10.1.3 Identification procedure

All the following operations shall be done for all VC-B2 related nodes of the ISOBUS network:

a) The HPI-MC shall address the first CS and initiate opening the IL-switch of this CS via the signal “PC/S Operational Status - IL-switch demand” (set the 2-bit parameter as follows: [0,1] → [0,0]).

  — All other SSs shall listen to this demand, to be able to assign a reaction of the IL.

b) To confirm the switch demand of the SS, the addressed CS shall open its IL-switch and indicate the opened state via the ISOBUS signal “Load Operational Status - IL-switch state”.

c) The related SS shall detect the interrupted IL-signal within 250 ms.

d) The HPI-MC shall initiate re-closing the IL-switch of the first CS via the signal “PC/S Operational Status - IL-switch demand” (set the 2-bit parameter as follows: [0,0] → [0,1]).

e) To confirm the switch demand of the SS, the addressed CS shall close its IL-switch and indicate the closed state via the signal “Load Operational Status IL-switch state”.

f) The related SS shall detect the re-closed IL within 250 ms.

g) If the same SS detects opening and closing of its IL in the allowed time frame related to the IL-switch demand, SS and CS shall be clearly assigned.

h) The information of identified HPI shall be transferred to the HPI-MC.

i) The procedure shall be repeated until all CS(s) will be addressed and clearly assigned to SSs.

j) When all CS are assigned, the HPI-MC shall be able to build up the topology of the VC-B2 network.

See flowchart in Figure 12.

10.1.4 Additional conditions

— The status message “PC/S Operational Status - IL-switch demand” is intended for identification of the CS only. To avoid unintended IL opening and therefore VC-B2 power shutdown, the CS(s) shall not react on HPI-MC IL-switch demand” until the state “Ready for operation” is reached.

— If PWM-signal is used for IL-observation, the PWM-period shall be significantly smaller than the allowed response time (250 ms).

© ISO 2024 – All rights reserved

Documents
Document Sharing Hub
Full document details: BS ISO 23316-6:2024