BS ISO 23374-1:2023

BSI Standards Publication

Intelligent transport systems — Automated valet parking systems (AVPS)

Part 1: System framework, requirements for automated driving and for communications interface

Documents
Document Sharing Hub

Full document details: BS ISO 23374-1:2023

National foreword

This British Standard is the UK implementation of ISO 23374-1:2023.

The UK participation in its preparation was entrusted to Technical Committee EPL/278, Intelligent transport systems.

A list of organizations represented on this committee can be obtained on request to its committee manager.

Contractual and legal considerations

This publication has been prepared in good faith, however no representation, warranty, assurance or undertaking (express or implied) is or will be made, and no responsibility or liability is or will be accepted by BSI in relation to the adequacy, accuracy, completeness or reasonableness of this publication. All and any such responsibility and liability is expressly disclaimed to the full extent permitted by the law.

This publication is provided as is, and is to be used at the recipient's own risk.

The recipient is advised to consider seeking professional guidance with respect to its use of this publication.

This publication is not intended to constitute a contract. Users are responsible for its correct application.

© The British Standards Institution 2023
Published by BSI Standards Limited 2023

ISBN 978 0 539 05798 0

ICS 03.220.20; 35.240.60

Compliance with a British Standard cannot confer immunity from legal obligations.

This British Standard was published under the authority of the Standards Policy and Strategy Committee on 31 July 2023.

Amendments/corrigenda issued since publication

Date	Text affected

Documents
Document Sharing Hub

Full document details: BS ISO 23374-1:2023

INTERNATIONAL STANDARD

ISO 23374-1

First edition
2023-07

Intelligent transport systems — Automated valet parking systems (AVPS) —

Part 1: System framework, requirements for automated driving and for communications interface

Systèmes de transport intelligents — Systèmes de parking avec voiturier automatisé (AVPS) —

Partie 1: Cadre du système, exigences relatives à la conduite automatisée et à l'interface de communication

Reference number
ISO 23374-1:2023(E)

Documents
Document Sharing Hub
© ISO 2023

Full document details: BS ISO 23374-1:2023

COPYRIGHT PROTECTED DOCUMENT

© ISO 2023

All rights reserved. Unless otherwise specified, or required in the context of its implementation, no part of this publication may be reproduced or utilized otherwise in any form or by any means, electronic or mechanical, including photocopying, or posting on the internet or an intranet, without prior written permission. Permission can be requested from either ISO at the address below or ISO's member body in the country of the requester.

ISO copyright office
CP 401 • Ch. de Blandonnet 8
CH-1214 Vernier, Geneva
Phone: +41 22 749 01 11
Email: copyright@iso.org
Website: www.iso.org

Published in Switzerland

© ISO 2023 – All rights reserved

Documents
Document Sharing Hub

Full document details: BS ISO 23374-1:2023

Contents

Page

Foreword ... **vi**
Introduction ... **vii**
1 Scope ... **1**
2 Normative references ... **1**
3 Terms and definitions ... **2**
4 Symbols and abbreviated terms ... **6**
4.1 Symbols ... 6
4.2 Abbreviated terms ... 7
4.2.1 Terms defined in ISO/SAE PAS 22736 ... 7
4.2.2 Terms relating to names of system and sub-systems ... 7
4.2.3 Other terms ... 7
5 System framework ... **8**
5.1 System description ... 8
5.1.1 Basic functionalities ... 8
5.1.2 Basic flow ... 8
5.2 System configuration ... 10
5.2.1 Sub-systems ... 10
5.2.2 System architecture ... 10
5.2.3 Interface ... 10
5.3 Functional allocation ... 11
5.4 Classification ... 12
5.4.1 Vehicle operation types ... 12
5.4.2 Traffic environment categories ... 13
5.5 Human interaction ... 13
5.5.1 General ... 13
5.5.2 Service provider ... 14
5.5.3 System operator ... 14
5.5.4 Facility manager ... 14
6 Requirements for automated vehicle operation functions ... **14**
6.1 General ... 14
6.1.1 Principles for performing automated vehicle operation ... 14
6.1.2 Relationship of the operation functions ... 15
6.1.3 Operational design domain ... 15
6.2 Requirements for DDT ... 16
6.2.1 General ... 16
6.2.2 Basic performance requirements ... 16
6.2.3 Additional requirements for operation under a mixed traffic environment ... 17
6.3 Requirements for emergency stopping ... 18
6.3.1 General ... 18
6.3.2 DDT fallback[1] ... 19
6.3.3 Response to operation stop commands ... 19
6.3.4 Detection of human activities ... 19
6.4 Requirements for destination assignment ... 19
6.4.1 General requirements ... 19
6.4.2 Type 1 systems ... 20
6.4.3 Type 2 and 3 systems ... 20
6.5 Requirements for route planning ... 20
6.6 Requirements for localization accuracy ... 20
6.6.1 Accuracy requirement relative to the digital map ... 20
6.6.2 Accuracy requirement of the end position relative to the destination ... 21
6.7 Requirements for human activity recognition ... 21
7 Requirements for management functions ... **24**

© ISO 2023 – All rights reserved

AVA Documents
Document Sharing Hub
Full document details: BS ISO 23374-1:2023

7.1 Functions that influence the automated vehicle operation 21
7.1.1 General 21
7.1.2 Remote engagement 21
7.1.3 Operation stop 21
7.1.4 Remote assistance 22
7.1.5 Remote disengagement 22
7.1.6 Central control 22
7.2 Other management functions 22
7.2.1 Compatibility and occupancy check 22
7.2.2 SV identification 23
7.2.3 Response to incapacitation of the operation functions 23
7.2.4 Maintaining environmental conditions 23

8 Requirements for the environment within parking facilities 24
8.1 General 24
8.2 Common requirements 24
8.2.1 Operation zone 24
8.2.2 Drop-off and pick-up area 24
8.2.3 SV identification area 24
8.2.4 Wireless communication 24
8.2.5 Operation stop device 25
8.2.6 Lighting 25
8.3 Vehicle-operation-type-dependent requirements 26
8.3.1 Detection capabilities of the R sub-system 26
8.3.2 Localization markers 26
8.3.3 Digital maps 27
8.4 Traffic environment category dependent requirements 29
8.4.1 Mixed traffic 29
8.4.2 Exclusive traffic 29

9 Requirements for overall system operation 29
9.1 General 29
9.2 Requirements for the communication interface 30
9.2.1 General requirements 30
9.2.2 Security goals 31
9.2.3 Security requirements 31
9.3 System states and transition diagram 31
9.3.1 State transition diagram 31
9.3.2 Definition and requirements of system states 33
9.3.3 Transition conditions 36
9.4 Suspend condition codes 40
9.5 Object and event detection data reporting 41
9.6 Data recording 41
9.7 Information to the user 42
9.8 Development process and management 42

10 Test scenarios for automated vehicle operation 42
10.1 General 42
10.1.1 Purpose 42
10.1.2 Test sites 43
10.1.3 Environmental conditions 43
10.1.4 Example test setups 43
10.1.5 Values of each figure 44
10.1.6 Test targets 44
10.1.7 Observing designed values at a preparation run 45
10.1.8 Means to limit the designed values 45
10.1.9 Common pass criteria 46
10.1.10 List of test scenarios and scenes 46
10.2 Basic scenarios 47
10.2.1 Scenario A: Entering 47

© ISO 2023 – All rights reserved
Documents
Document Sharing Hub
Full document details: BS ISO 23374-1:2023

10.2.2 Scenario B: Re-parking 48
10.2.3 Scenario C: Exiting 50
10.3 Basic scenes 51
10.3.1 Scene 01: Climbing a ramp at slow speed 51
10.3.2 Scene 02: Ramp down 52
10.3.3 Scene 03: Operation on spiral ramps (up/down) 53
10.3.4 Scene 04: Out of drop-off area 55
10.3.5 Scene 05: SV identification 55
10.3.6 Scene 06: Out of operation zone 56
10.4 Traffic rules and behaviours 57
10.4.1 Scene 11: Stopping location 57
10.4.2 Scene 12: Intersection passing 58
10.4.3 Scene 13: Blocked intersection 59
10.4.4 Scene 14: Give way in two-way traffic 60
10.4.5 Scene 15: Vehicle in front is reversing towards SV 61
10.5 Static object avoidance 62
10.5.1 Scene 21: Smallest object in the direction of travel (forward/reverse) 62
10.5.2 Scene 22: Overhanging object 64
10.5.3 Scene 23: Infant in parking spot (reverse/forward) 65
10.5.4 Scene 24: Infant lying near ramp (up/down) 66
10.5.5 Scene 25: Infant behind a curve 68
10.5.6 Scene 26: Infant in front of parked vehicle (forward/reverse) 69
10.5.7 Scene 27: Infant beside parked vehicle 70
10.5.8 Scene 28: Infant lying partly underneath parked vehicle 71
10.6 Dynamic object avoidance 72
10.6.1 Scene 31: Forward vehicle braking hard 72
10.6.2 Scene 32: Parked vehicle rushing out 73
10.6.3 Scene 33: Cross-cutting child 75
10.6.4 Scene 34: Irregular movement of an adult 77
10.6.5 Scene 35: Bicyclist approaching 79
10.7 Emergency stopping 80
10.7.1 Scene 41: Operation stop command 80
10.7.2 Scene 42: Communication failure 80

Annex A (normative) **Communication sequences** **81**

Annex B (normative) **Test targets** **108**

Annex C (informative) **Description of localization markers** **110**

Annex D (informative) **Guidance in placing coded markers in parking facilities** **117**

Annex E (informative) **Example of line markings detectable by on-board sensors** **123**

Annex F (informative) **Parking facility dimension** **125**

Annex G (informative) **Examples for system implementation** **128**

Annex H (informative) **Type 3 implementation example** **129**

Bibliography **153**

© ISO 2023 – All rights reserved

Documents
Document Sharing Hub
Full document details: BS ISO 23374-1:2023

Foreword

ISO (the International Organization for Standardization) is a worldwide federation of national standards bodies (ISO member bodies). The work of preparing International Standards is normally carried out through ISO technical committees. Each member body interested in a subject for which a technical committee has been established has the right to be represented on that committee. International organizations, governmental and non-governmental, in liaison with ISO, also take part in the work. ISO collaborates closely with the International Electrotechnical Commission (IEC) on all matters of electrotechnical standardization.

The procedures used to develop this document and those intended for its further maintenance are described in the ISO/IEC Directives, Part 1. In particular, the different approval criteria needed for the different types of ISO document should be noted. This document was drafted in accordance with the editorial rules of the ISO/IEC Directives, Part 2 (see www.iso.org/directives).

ISO draws attention to the possibility that the implementation of this document may involve the use of (a) patent(s). ISO takes no position concerning the evidence, validity or applicability of any claimed patent rights in respect thereof. As of the date of publication of this document, ISO had not received notice of (a) patent(s) which may be required to implement this document. However, implementers are cautioned that this may not represent the latest information, which may be obtained from the patent database available at www.iso.org/patents. ISO shall not be held responsible for identifying any or all such patent rights.

Any trade name used in this document is information given for the convenience of users and does not constitute an endorsement.

For an explanation of the voluntary nature of standards, the meaning of ISO specific terms and expressions related to conformity assessment, as well as information about ISO's adherence to the World Trade Organization (WTO) principles in the Technical Barriers to Trade (TBT), see www.iso.org/iso/foreword.html.

This document was prepared by Technical Committee ISO/TC 204, *Intelligent transport systems*.

Any feedback or questions on this document should be directed to the user's national standards body. A complete listing of these bodies can be found at www.iso.org/members.html.

© ISO 2023 – All rights reserved
Documents
Document Sharing Hub
Full document details: BS ISO 23374-1:2023

Introduction

The aim of this document is to contribute to the realization of safe and reliable level 4 driverless operation of vehicles within parking facilities, and to support a fast and smooth market introduction by achieving interoperability among vehicles provided by different manufactures and within different parking facilities managed by different organizations.

An automated valet parking system (AVPS) will automatically operate unoccupied vehicles from the drop off area (where the driver and passengers leave the vehicle) to a parking destination, and will also send the vehicle to a pickup area upon the user's request.

An AVPS will not only provide enhanced user experiences, but is also expected to contribute to accident reduction, lowering energy consumption and CO_2 emissions of vehicles searching for available parking spaces, and effectively utilize land by densely parking vehicles in the available space.

An AVPS can be utilized in places such as the large-scale public parking facilities of shopping malls, airports, large apartment buildings, time-based small public parking lots, or fleet management carpools. By implementing the system in parking facilities, the service provider will gain the opportunity to add other related services such as moving electric vehicles to and from charging stations or providing access to the trunk for the delivery of goods. Rather than having fully-automated vehicles driving around and searching for space, the system allows the service provider to govern the vehicles for improved traffic management.

In order to contribute to the realization of safe and reliable level 4 driverless operation, the requirements specified in this document are based on the performance of state-of-the-art technologies that are available at the time of publication. Thus, this document will be revised in the future in accordance with relevant technology enhancement.

Within this document, specific technological solutions for the communications interface (e.g. communication method, message protocol) are intentionally left open due to differences in available and commonly-used technology (e.g. spectrum allocation) around the world. Therefore, it is recommended that the communications interface be further discussed at the national/regional level to ensure interoperability.

© ISO 2023 – All rights reserved

Documents
Document Sharing Hub
Full document details: BS ISO 23374-1:2023

Documents
Document Sharing Hub

Intelligent transport systems — Automated valet parking systems (AVPS) —

Part 1: System framework, requirements for automated driving and for communications interface

1 Scope

Automated valet parking systems (AVPSs) perform level 4 automated driving of individual or multiple unoccupied vehicles within a prescribed area of a parking facility. This document specifies performance requirements for the operation functions, the environmental conditions within parking facilities where automated vehicle operation is performed, and the test procedures to verify the performance requirements.

An AVPS is comprised of physically separated sub-systems distributed among vehicles, facility equipment and user domains. The functionalities of AVPSs are realized by cooperation of these sub-systems, which are, in many cases, provided by different organizations. This document defines the system architecture and the communication interfaces between the sub-systems at the logical level.

An AVPS manages its system participants (i.e. AVPS-compliant vehicles and parking facilities) and provides interfaces to other facility users and involved persons (e.g. system operators, facility managers). This document contains requirements for the management functions such as checking compatibility between vehicles and parking facilities, performing remote assistance and recovery when automated driving cannot be performed, and executing operation stop commands in response to the actions of other facility users.

AVPSs are intended for use by a service provider upon receiving authority over vehicles from individual service recipients. This document does not include parking automation technologies that are solely based on usage by an individual user. If the vehicle is put into driverless operation directly by the user, this is not considered to be part of the AVPS.

2 Normative references

The following documents are referred to in the text in such a way that some or all of their content constitutes requirements of this document. For dated references, only the edition cited applies. For undated references, the latest edition of the referenced document (including any amendments) applies.

ISO 20900, *Intelligent transport systems — Partially-automated parking systems (PAPS) — Performance requirements and test procedures*

ISO 8608, *Mechanical vibration — Road surface profiles — Reporting of measured data*

ISO 19206-2, *Road vehicles — Test devices for target vehicles, vulnerable road users and other objects, for assessment of active safety functions — Part 2: Requirements for pedestrian targets*

ISO 19206-3, *Road vehicles — Test devices for target vehicles, vulnerable road users and other objects, for assessment of active safety functions — Part 3: Requirements for passenger vehicle 3D targets*

ISO 19206-4, *Road vehicles — Test devices for target vehicles, vulnerable road users and other objects, for assessment of active safety functions — Part 4: Requirements for bicyclist targets*

© ISO 2023 – All rights reserved

Documents
Document Sharing Hub
Full document details: BS ISO 23374-1:2023

ISO/SAE PAS 22736, *Taxonomy and definitions for terms related to driving automation systems for on-road motor vehicles*

IEC 61508 (all parts),, *Functional safety of electrical/electronic/programmable electronic safety-related systems*

ISO 21448, *Road vehicles — Safety of the intended functionality*

ISO/SAE 21434, *Road vehicles — Cybersecurity engineering*

3 Terms and definitions

For the purposes of this document, the terms and definitions given in ISO/SAE PAS 22736 and the following apply.

ISO and IEC maintain terminology databases for use in standardization at the following addresses:

— ISO Online browsing platform: available at https://www.iso.org/obp

— IEC Electropedia: available at https://www.electropedia.org/

3.1
service provider
organization that hands over or receives authority to or from users through an automated valet parking system (AVPS)

Note 1 to entry: See 5.5.2 for further information.

3.2
user
<of an automated valet parking system> individual service recipient that hands over or retrieves authority to or from service providers through an automated valet parking system (AVPS)

Note 1 to entry: Both the owner of a personal vehicle and a user of a car share service can be a user of an AVPS.

Note 2 to entry: Within ISO/SAE PAS 22736, the term "user" is defined as the human role specifically in relation to driving automation systems. An AVPS is a system that includes system participant management functions in addition to level 4 automated driving functions. Within this document, the term "system operator" (see 3.28 and 5.5.3) is used as a role which performs dispatching and remote assistance in relation to the level 4 automated driving functions of an AVPS. The term "user" is assigned to the individual service recipient, and not to the dispatcher or remote assistant.

3.3
authority
rights and ability to perform certain tasks on the subject vehicle

Note 1 to entry: Within this document, authority is transferred between the user and the service provider, and does not exist among the two at the same time. One always has priority regarding the management and operation of the subject vehicle (SV).

Note 2 to entry: See 5.1.2.2 for further information.

3.4
subject vehicle
SV
light vehicle[1] which is equipped with the vehicle operation sub-system of an automated valet parking system (AVPS)

© ISO 2023 – All rights reserved
Documents
Document Sharing Hub
Full document details: BS ISO 23374-1:2023

3.5
parking facility
public or private car park in which an automated valet parking system (AVPS) is available

Note 1 to entry: An AVPS does not necessarily have to be available in the entire facility in order to achieve conformance to this document. For example, it is possible for only a certain floor within a multi-story parking facility to be dedicated to an AVPS.

Note 2 to entry: Within ISO/TS 5206-1, a parking facility is defined by different elements of the place hierarchy depending on the configuration of the place hierarchy. Typically, in ISO/TS 5206-1 conformant data, a parking facility can be characterized as a "place" with associated characterizing attributes.

3.6
operation zone
single or multiple geographical area(s) within a parking facility where automated driving can be performed by an automated valet parking system (AVPS)

Note 1 to entry: An operation zone can contain information other than the two-dimensional geographical area, such as ceiling height or floor level information.

Note 2 to entry: Within ISO/TS 5206-1, an operation zone can be defined by different elements of the place hierarchy depending on the configuration of the place hierarchy. Depending on the configuration of the parking facility, in ISO/TS 5206-1 conformant data, an operation zone can either be characterized as a "place" or as an "identified area" with associated characterizing attributes.

Note 3 to entry: Multiple areas may overlap.

3.7
drop-off area
location within the operation zone where the user leaves the subject vehicle (SV) and hands over authority to the service provider

Note 1 to entry: The drop-off area may be for a single vehicle or a larger area (e.g. the entire operation zone).

Note 2 to entry: Within ISO/TS 5206-1, this term is defined as a “specific area” which is a sub-class of “identified area”.

3.8
pick-up area
location within the operation zone where the service provider sends the subject vehicle (SV) to the user for boarding, and hands over authority

Note 1 to entry: The pick-up area may be for a single vehicle or a larger area (e.g. the entire operation zone).

Note 2 to entry: Within ISO/TS 5206-1, this term is defined as a “specific area” which is a sub-class of “identified area”.

3.9
parking spot
area within the parking facility where a single vehicle can be parked

Note 1 to entry: Parking spots are typically delineated by line markers, curbs or other identification markings on the floor.

Note 2 to entry: Within ISO/TS 5206-1, this term is defined as a “space”.

3.10
parking area
area within the operation zone consisting of multiple parking spots

Note 1 to entry: Within ISO/TS 5206-1, this term is defined as a "specified area" with associated characterizing attributes.

© ISO 2023 – All rights reserved

Documents
Document Sharing Hub
Full document details: BS ISO 23374-1:2023

3.11
destination
location within the operation zone to which the subject vehicle is transferred

Note 1 to entry: The destination is determined by the automated valet parking system (AVPS). Parking spots, service bays (e.g. location beside an electric vehicle charging station) and pick-up area are examples of a destination.

3.12
route
planned traversal of a subject vehicle (SV) from the point of origin to a destination

Note 1 to entry: When way point(s) are given, a route will be created to pass these way point(s).

3.13
path
planned sequence of way points for a subject vehicle (SV) to follow

Note 1 to entry: A path is determined based on the physical size and moving capabilities (e.g. turning radius) of the SV.

3.14
trajectory
planned path with dynamic information (e.g. time, speed, acceleration)

3.15
automated valet parking facility equipment
PFE
physical equipment installed in the parking facility for supporting automated valet parking system (AVPS)

EXAMPLE Communication devices and detection sensors.

3.16
coded marker
physical indication with a unique ID installed in the parking facility, which is detectable by the SV for the purpose of assisting localization

Note 1 to entry: The number of unique IDs may be limited depending on the area of application.

Note 2 to entry: "Marker" includes all kinds of localization indicators such as radio-based technologies and those explained in Annex D.

3.17
anonymous marker
physical indication without a unique ID installed in the parking facility that is detectable by the subject vehicle (SV) for the purpose of assisting localization

3.18
designed speed
situation-specific speed for travel under given circumstances (e.g. traffic conditions, environmental conditions) which is determined by an automated valet parking system (AVPS) and which is designated to the subject vehicle (SV) by that system

Note 1 to entry: Designed speed is a variable and not a fixed value. An AVPS will operate the SV based on the designed speed, resulting in dynamic changes of the actual speed of the SV during its operation.

Note 2 to entry: Different manufacturers can provide different designed speeds under the same circumstances.

EXAMPLE An AVPS will adjust the SV's operating speed when the SV is travelling towards a corner with limited visibility due to occlusion by a wall. The exact operating speed depends on the system design in this circumstance. Therefore, most of the test procedures in this document do not specify a specific value for the speed but only refer to the designed speed.

© ISO 2023 – All rights reserved
Documents
Document Sharing Hub
Full document details: BS ISO 23374-1:2023

3.19
designed distance
situation-specific physical distance to other facility users, objects or structures, which an automated valet parking system (AVPS) intends to maintain under given circumstances while performing automated driving, and which is designated to the subject vehicle (SV) by the system

Note 1 to entry: Different manufacturers can provide different designed distances towards the same object.

3.20
pause
braking activity performed by an automated valet parking system (AVPS) which either leads the subject vehicle (SV) to a standstill or maintains a stationary condition that occurs during automated driving and in which the SV remains ready to resume automated driving

Note 1 to entry: Situations such as coming to a standstill to give way to other traffic and coming to a standstill to avoid a collision can be considered as a pause provided the AVPS is able to continue operating the SV towards the destination after the situation that led to the pause has been cleared.

Note 2 to entry: When automated driving cannot be continued by the AVPS without human confirmation, the braking activity is described as an emergency stop as defined in 6.3.

3.21
sub-system
component of an automated valet parking system (AVPS) at a logical level which includes one or more functions

Note 1 to entry: See 5.2.1 for details.

3.22
function
ability of automated valet parking system (AVPS) to process inputs to the system and contribute to conversion of the inputs into appropriate outputs

3.23
reservation
<automated valet parking service> basic agreement between the user and the service provider regarding the operation and management of the subject vehicle (SV) within a specific parking facility

Note 1 to entry: A single reservation may be valid for a certain period of time or dedicated to a single session.

Note 2 to entry: A reservation may include information such as the right to use a parking spot during a certain period of time, agreement to hand over authority or agreement for additional services (e.g. charging electric vehicle).

3.24
session
<automated valet parking service> sequence of interactions for a given subject vehicle (SV) between a check-in (see 9.3.3.1) and a check-out (see 9.3.3.2)

Note 1 to entry: There may be more than one session during one valid reservation period, but multiple sessions are not carried out simultaneously for one SV.

Note 2 to entry: Typically, a wireless connection is established on the operation interface (see 5.2.3) during a session, leaving the possibility of suspending the connection during the sleep sub-state (see 9.3.2.3.3).

Note 3 to entry: Under certain conditions, the user may have authority while a session is established. See 9.3.2.2 for additional information.

© ISO 2023 – All rights reserved

Documents
Document Sharing Hub
Full document details: BS ISO 23374-1:2023

3.25
mission
<automated valet parking service> sequence of interactions under which the subject vehicle (SV) is being operated automatically by an automated valet parking system (AVPS) from its parked location to the destination for a particular purpose

Note 1 to entry: There may be more than one mission during one valid session period, but multiple missions are not carried out simultaneously for one SV.

3.26
scenario
<test> description of a complete traversal from the point of origin to a destination, to be performed for testing

3.27
scene
<test> description of a specific event to be performed for testing that does not include a point of origin or destination

Note 1 to entry: Test scenes may become part of a test scenario. Multiple test scenes may be implemented in a single test scenario.

3.28
system operator
role within an organization which manages vehicle operation in the parking facility, and which involves tasks which are either monitored while being performed automatically, or performed manually by individuals from a remote location.

Note 1 to entry: See 5.5.3 for further information.

3.29
facility manager
role within an organization which involves tasks which are to be performed by individuals and which require physical access to objects and events within the facility

Note 1 to entry: See 5.5.4 for further information.

4 Symbols and abbreviated terms

4.1 Symbols

Symbols and their meanings.

$V_{\mathrm{des,sv}}$	designed speed of an SV
$V_{\mathrm{max,sv}}$	maximum designed speed of an SV
$D_{\mathrm{des,fu}}$	designed distance to other facility users (e.g. vulnerable road users) and dynamic non-AVPS vehicles
$D_{\mathrm{des,ob}}$	designed distance to fixed structures or objects other than facility users (e.g. parked vehicles)
$D_{\mathrm{des,gap}}$	designed longitudinal distance to the preceding vehicle during automated vehicle operation

© ISO 2023 – All rights reserved
Documents
Document Sharing Hub
Full document details: BS ISO 23374-1:2023

4.2 Abbreviated terms

4.2.1 Terms defined in ISO/SAE PAS 22736

ADS automated driving system

DDT dynamic driving task

OEDR object and event detection and response

ODD operational design domain

4.2.2 Terms relating to names of system and sub-systems

AVPS automated valet parking system

OB operator backend (sub-system)

P automated valet parking facility management (sub-system)

R remote vehicle operation (sub-system)

U user frontend (sub-system)

UB user backend (sub-system)

V on-board vehicle operation (sub-system)

VB vehicle backend (sub-system)

4.2.3 Other terms

CRC cyclic redundancy check

DSRC dedicated short range communication

FV forward vehicle

PFE automated valet parking facility equipment (see 3.11)

SV subject vehicle (see 3.3)

VMC vehicle motion control

VRU vulnerable road user

NDS Navigation Data Standard

© ISO 2023 – All rights reserved

Documents
Document Sharing Hub
Full document details: BS ISO 23374-1:2023

5 System framework

5.1 System description

5.1.1 Basic functionalities

The basic functionalities of AVPS can be described as the (automated vehicle) operation functions and the (system participants) management functions. Table 1 describes these basic functionalities of AVPS.

— Performance requirements associated with the (automated vehicle) operation functions are specified in Clause 6.

— General requirements associated with the (system participants) management functions are specified in Clause 7.

Table 1 — Basic functionalities and their description

Basic functionalities	Description
(automated vehicle) Operation functions	— Determines a destination and route. — Performs level 4 automated driving. — Responds to commands of the system management functionalities.
(system participants) Management functions	— Manages environmental conditions. — Checks the compatibility between vehicles and facilities. — Identifies the correct SV as the communication participant. — Remotely engages and disengages an SV. — Performs remote assistance[1] when necessary. — Issues a command to stop the operation when necessary. — Reacts upon incapacitation of the automated vehicle operation. — Processes user requests.

5.1.2 Basic flow

5.1.2.1 General

Figure 1 describes the basic flow of AVPS based on the user action and the system reaction. Figure 1 describes the flow in which the user initially hands over authority to the service provider as a representative use case. AVPS can also be utilized for services in which the service provider initially hands over authority to the user (e.g. rental car services). Note that re-parking is an optional process and is not always required to complete the flow.

© ISO 2023 – All rights reserved
Documents
Document Sharing Hub
Full document details: BS ISO 23374-1:2023

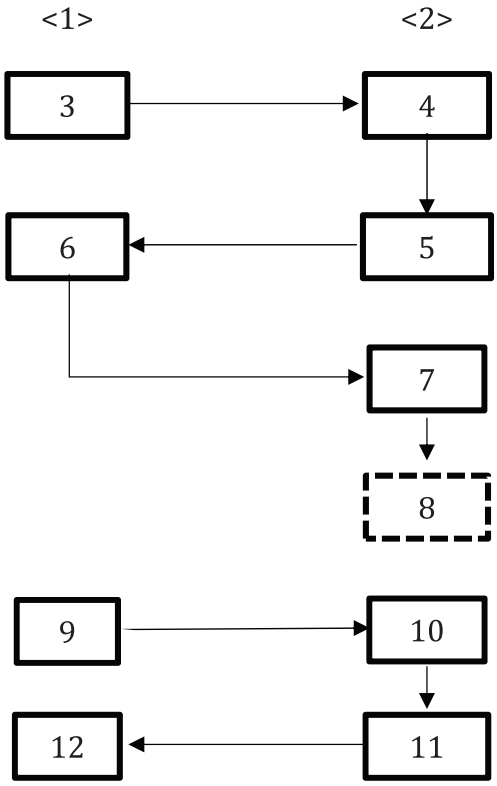

Key

1	user action	2	system reaction
3	requests availability	4	checks vacancy and compatibility
5	identifies SV and initiates check-in procedure	6	hands over authority
7	automated vehicle operation (entering)	8	automated vehicle operation (re-parking)
9	requests retrieval	10	automated vehicle operation (exiting)
11	initiates check-out procedure	12	receives authority

Figure 1 — Basic flow of AVPS

5.1.2.2 Considerations when the user hands over authority to the service provider

When the user initially hands over the authority to the service provider as illustrated in Figure 1, this document presupposes that an agreement exists between the user and service provider to perform the following tasks regarding the SV through AVPS, at a minimum.

— Dispatch the SV into driverless operation.

— Perform level 4 automated driving on such a dispatched vehicle.

— Turn off the SV at its parked location.

Additionally, the user may agree on certain tasks such as the following:

— Allow the facility manager to enter the vehicle and manually operate the vehicle if automated vehicle operation is not possible.

— Allow opening and closing of the trunk of the SV for package delivery service.

— Allow maintenance work.

© ISO 2023 – All rights reserved

Documents
Document Sharing Hub
Full document details: BS ISO 23374-1:2023

It is assumed that the user and service provider agree on the terms and conditions when using AVPS, which would include the aspects above. However, the form and the contents of the agreement are not within the scope of this document.

The facility manager is required to manually relocate the SV in the case of incapacitation of automated vehicle operation (see 7.2.3). If entering the vehicle cannot be agreed upon, alternative means shall be prepared in order to conform to the requirements of this document.

5.1.2.3 Example use cases of re-parking

Re-parking is a capability of AVPS that can be achieved by the basic functionalities. This capability allows service providers to move the SV within the operation zone without a direct action from the user.

For example, the re-parking capability could provide the following opportunities.

— Move an electric vehicle to a fixed charging spot.

— Move a parked vehicle to a car wash machine or other service bays.

— Maximize space utilization by parking vehicles close together and moving surrounding vehicles when one vehicle needs to exit.

— Reduce the time for retrieval by moving the vehicle closer to the exit near the expected arrival time (e.g. at an airport parking facility when flight arrival time information has been provided).

5.2 System configuration

5.2.1 Sub-systems

The rectangular boxes in Figure 2 represent AVPS sub-systems.

— Functions allocated to each sub-system are described in Table 2.

— This document specifies performance requirements for the functions allocated to the sub-systems represented by the boxes with solid lines (Clause 6). These two sub-systems perform mainly the operation functions.

— This document describes the required functions of sub-systems represented by the boxes with dotted lines. These sub-systems perform mainly the management functions (Clause 7).

5.2.2 System architecture

Figure 2 shows the logical architecture of the AVPS sub-systems. Implementation of the logical sub-systems to physical components is up to system design and is not subject to this document. In addition, a sub-system may be comprised of multiple physical components. For example, the remote vehicle operation sub-system may be comprised of sensors, control units and communication devices. The interfaces between these physical components are also not subject to this document. See Annex G for examples of system implementation to physical components.

5.2.3 Interface

The arrows in Figure 2 represent the interfaces between the sub-systems.

— This document specifies the minimum set of data elements to be communicated through the operation interface (key 1) and management interfaces (key 2) (Annex A).

— This document describes the flow of information represented by the arrows with dotted lines.

© ISO 2023 – All rights reserved
Documents
Document Sharing Hub
Full document details: BS ISO 23374-1:2023

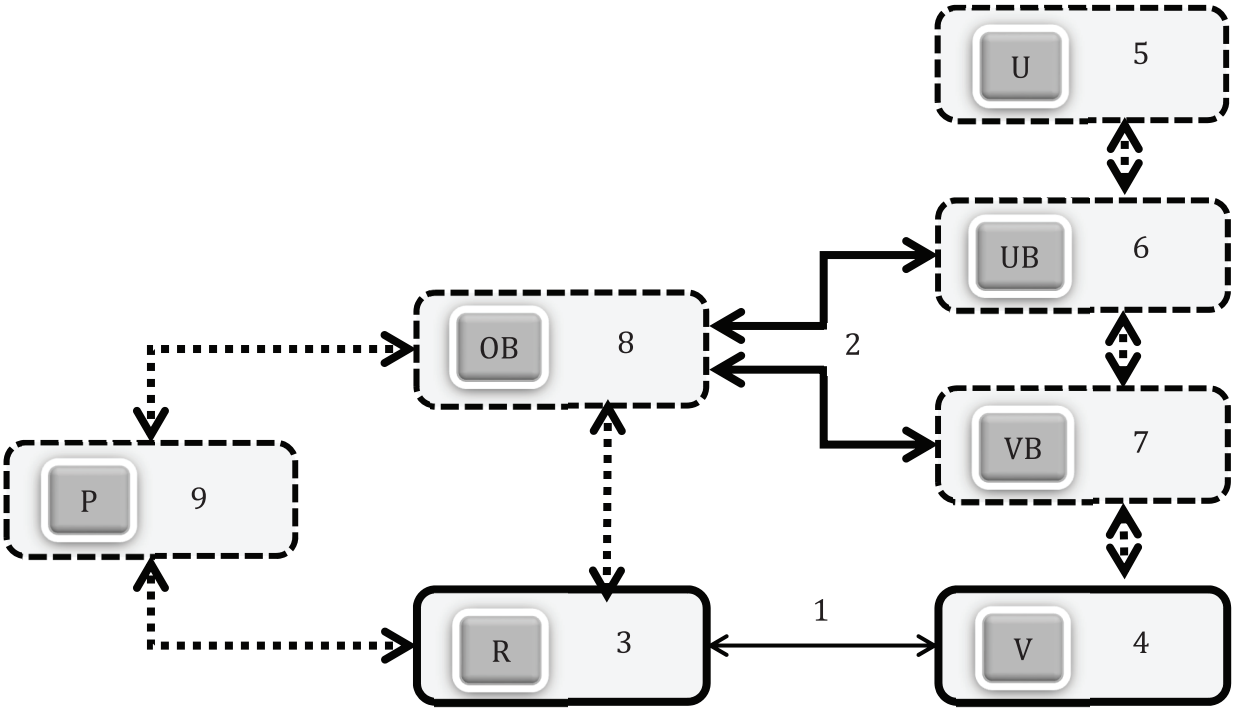

Key

1 operation interface
2 management interfaces
3 remote vehicle operation
4 on-board vehicle operation
5 user frontend
6 user backend
7 vehicle backend
8 operator backend
9 automated valet parking facility management

Figure 2 — System architecture

5.3 Functional allocation

Table 2 shows the allocation of the main functions of AVPS to each sub-system of the architecture.

Table 2 — Functional allocation

ID	Sub-system	Role	Main functions	Remarks
R	Remote vehicle operation	Performs automated vehicle operation	— SV identification. — Destination assignment. — Route planning. — OEDR. — Localization of SV. — Path determination. — Trajectory calculation. — Vehicle motion control. — Emergency stopping.	The functional allocation between the two vehicle operation sub-systems differs depending on the vehicle operation type (see 5.4.1 for details).
V	On-board vehicle operation			

© ISO 2023 – All rights reserved

Documents
Document Sharing Hub
Full document details: BS ISO 23374-1:2023

Table 2 *(continued)*

ID	Sub-system	Role	Main functions	Remarks
U	User frontend	Interface to the user	— Sends user requests. — Receives and updates vehicle status to user.	
UB	User backend	Manages the system participants	— User request processing.	The three backend sub-systems cooperate to respond to user requests (e.g. retrieval of vehicles).
VB	Vehicle backend		— Remote engagement/ disengagement.	
OB	Operator backend		— Manages parking facility availability. — Checks compatibility between SV and parking facility. — Dispatches SVs into driverless operation. — Performs remote assistance.	
P	Automated valet parking facility management		— Manages environmental conditions. — Responds to incapacitation of the operation functions.	

5.4 Classification

5.4.1 Vehicle operation types

5.4.1.1 General

This document classifies the automated vehicle operation functions of AVPS into three types based on its different functional allocation to the R and V sub-systems. Table 3 shows functional allocation differences among the three vehicle operation types. SV identification and emergency stopping functions are excluded from Table 3, as they are performed cooperatively between the R and V sub-systems and do not contribute to characterizing the types based on the functional allocation.

Refer to Clause 6 for performance requirements corresponding to the functions.

Table 3 — Functional allocation for different Types

Functions	Type 1	Type 2	Type 3
Destination assignment	R & V	R	R
Route planning	V	R	R
OEDR	V (& R [a])	R	R & V
SV localization	V	R	V
Path determination	V	R	V
Trajectory calculation	V	R or V [b]	V
Vehicle motion control	V	V	V

[a] Allocation of the OEDR function to the remote vehicle operation sub-system is optional for Type 1 (refer to 8.3.1)

[b] Refer to A.3.1.2 for details.

© ISO 2023 – All rights reserved
Documents
Document Sharing Hub
Full document details: BS ISO 23374-1:2023

5.4.1.2 Type 1 description

The V sub-system carries out most of the operation functions. Depending on the system design, only portions of the destination assignment function (refer to 6.4 for details) are allocated to the R sub-system.

5.4.1.3 Type 2 description

The R sub-system carries out most of the operation functions. Means to perform the OEDR and localization functions are established by installing PFE (e.g. detection sensors, control units) in the parking facility. OEDR by SV on-board sensors (as part of the V sub-system) is not required.

5.4.1.4 Type 3 description

The functional allocation is balanced between the two operation sub-systems. Type 3 utilizes the OEDR capabilities of the SV, and also gives sufficient control to the R sub-system by allocating the destination assignment and route-planning functions.

5.4.2 Traffic environment categories

5.4.2.1 General

Parking facilities capable of handling AVPS are categorized into mixed traffic and exclusive traffic based on the traffic environment. They have different requirements for the DDT (6.2) and environment (Clause 8).

5.4.2.2 Mixed traffic

Mixed traffic is a condition where the vehicles operated by AVPS share the same operation zone with other facility users, such as manually driven vehicles and vulnerable road users. See 8.4.1 for detailed information.

5.4.2.3 Exclusive traffic

Exclusive traffic is a condition where only vehicles managed by AVPS exist in the operation zone, and other facility users (e.g. vehicles not managed by AVPS, vulnerable road users) are prohibited. See 8.4.2 for detailed information.

5.5 Human interaction

5.5.1 General

It is expected that humans interact with AVPS under specific conditions. The following subclauses define the roles of the involved organizations and tasks expected to be performed by individuals belonging to such organizations.

The roles defined in the following subclauses can be assigned to one organization, or multiple organizations. For example, the system operator role and facility manager role can be performed by the same organization. The tasks can also be assigned separately or to the same individual.

In general, human interaction is considered to be external to AVPS. However, this document assumes that some of the requirements allocated to the P sub-system may be designed to be performed by a human as stated in 5.5.4.

© ISO 2023 – All rights reserved

Documents
Document Sharing Hub
Full document details: BS ISO 23374-1:2023

5.5.2 Service provider

Service provider is the main organization which manages all the necessary information in order to provide services to the user through AVPS. Examples of the service provider's tasks are as follows.

— Coordinate the entities involved in AVPS and provide services to the user.

— Ensure that each sub-system fulfils the requirements stated in this document, and ensure that the cooperation of these sub-systems will conform to the system requirements defined in this document.

5.5.3 System operator

System operator interacts with AVPS through the OB sub-system. At a minimum, the following tasks shall be assigned.

— Dispatch the SV into driverless operation either manually or automatically.

— Perform remote assistance when requested by AVPS.

— Have the capability to terminate system operation when deemed necessary.

5.5.4 Facility manager

The facility manager assists the P sub-system. The requirements allocated to the P sub-system may be performed automatically or manually by the facility manager. The following are examples of the tasks which can need to be performed by a human.

— Maintain the environment in the parking facility (e.g. illuminance, floor conditions, PFE operating conditions).

— React upon incapacitation of the automated vehicle operation (e.g. reboot the system, manually transfer incapacitated vehicles).

— Check if the SV is equipped with external attachments which do not conform to the parking facilities' properties (e.g. available parking spot dimensions, ceiling height).

— Assist handover of the authority and efficient start of the automated vehicle operation (e.g. ensure that all passengers have left the SV and that other facility users are in an appropriate location when automated vehicles operation starts.).

6 Requirements for automated vehicle operation functions

6.1 General

6.1.1 Principles for performing automated vehicle operation

Safe operation of an unoccupied vehicle shall be given the highest priority among the overall objectives of AVPS.

The aim for the performance of the operation functions by AVPS is to be at least equal to or better than the driving capabilities of an experienced and attentive human driver (i.e. recognizing the environment, planning the reaction, and operating the vehicle).

The following subclauses specify minimum requirements which shall be fulfilled independently of the vehicle operation types.

© ISO 2023 – All rights reserved
Documents
Document Sharing Hub
Full document details: BS ISO 23374-1:2023

6.1.2 Relationship of the operation functions

Figure 3 shows the relationship of the operation functions, and also how some of the management functions influence the operation.

Requirements for path determination, trajectory calculation, VMC, and OEDR are combined as requirements for the DDT in 6.2

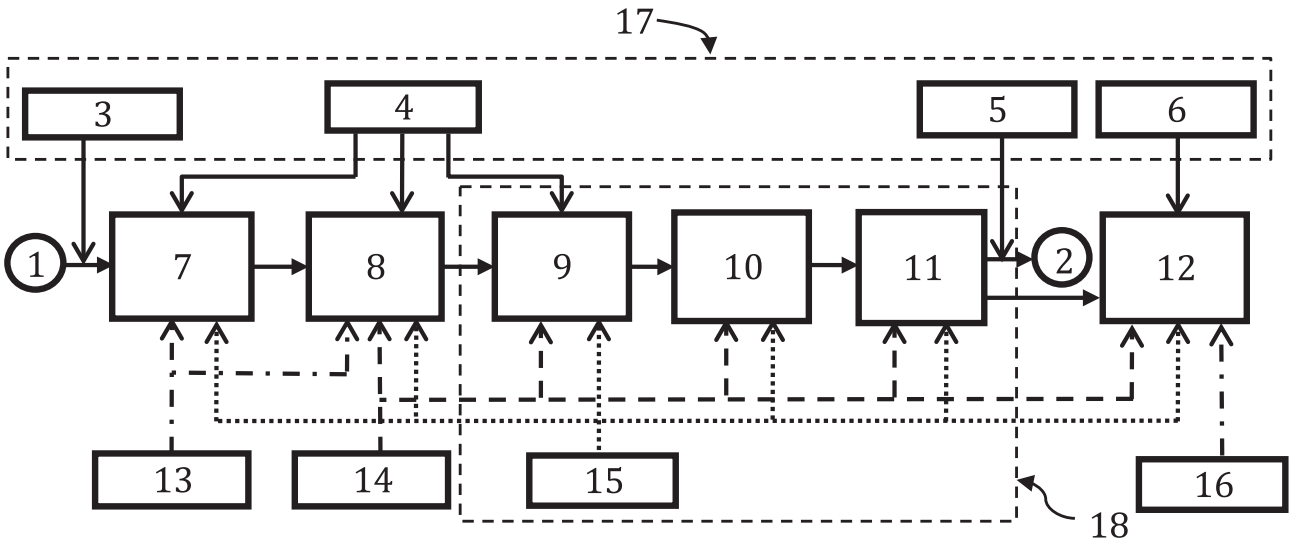

Key

1	start	2	end
3	remote engagement	4	remote assistance
5	remote disengagement	6	operation stop command
7	destination assignment	8	route planning
9	path determination	10	trajectory calculation
11	vehicle motion control	12	emergency stopping
13	map data	14	localization
15	OEDR	16	human activity recognition
17	management functions	18	DDT

NOTE 1 The relationships between functions expressed in arrows with broken lines are informative and the specification is up to the system design.

NOTE 2 Requirements concerning map data can be found in 8.3.3.

Figure 3 — Relationship of the operation functions

6.1.3 Operational design domain

Both R and V sub-systems shall predetermine their ODD. Automated vehicle operation is possible only when ODD conditions for both sub-systems are satisfied.

For example, SV on-board sensors and PFE used for object detection may have different operational limits. Automated vehicle operation is not possible when the environmental condition fulfils the ODD requirements of one of the sub-systems but not the other.

At a minimum, AVPS shall be capable of performing automated vehicle operation within indoor parking facilities with a paved surface, where the effect of weather is minimized. Operation in outdoor facilities is optional. Therefore, requirements for operation on rough surfaces and/or under various weather conditions are not specified in this document.

© ISO 2023 – All rights reserved

Documents
Document Sharing Hub
Full document details: BS ISO 23374-1:2023

6.2 Requirements for DDT

6.2.1 General

OEDR is a primary function within the operation functions as the normal/routine operation of the SV is performed automatically without direct supervision or continuous monitoring by a human. It is crucial to verify that the performance requirements are satisfied independently of different combinations of the R and V sub-systems.

The following subclauses specify minimum requirements that are fundamental among various scenarios. System designers shall consider improving the performance beyond the minimum requirements during specific driving scenarios (e.g. increase distances to other facility users under clear traffic conditions).

It is strongly recommended that OEDR be designed in a conservative and safety-oriented manner to avoid unnecessary risk and loss of social acceptance by commanding unnecessarily aggressive VMC which can potentially be perceived as threatening by other facility users.

6.2.2 Basic performance requirements

The following requirements apply during normal operation in both mixed and exclusive traffic environments.

— The AVPS shall be capable of using braking or evasive manoeuvres in order to avoid reasonably foreseeable and preventable collisions which can cause damages to objects or to the SV.

  — The AVPS shall be capable of providing smooth braking and acceleration, and of avoiding sudden braking or acceleration of the SV under non-emergency/non-hazardous situations.

  — The AVPS shall be capable of inducing the full braking force of the SV in an attempt to avoid a collision in emergency/hazardous situations.

— The AVPS shall be capable of continuously monitoring the driving environment, other facility users, system conditions, and behaviours of the SV.

— The AVPS shall be capable of operating the SV to the assigned destination, following the planned route.

  — The AVPS shall be capable of physically maintaining the SV within the operation zone, and within the permitted boundaries if applicable.

    NOTE Some Type 1 and 3 systems utilize a “permission area” transmitted from the R sub-system to the V sub-system for traffic management purposes. This can be explained as a limited, temporary operation zone that changes over time. For example, the SV can be ordered to stay within the permitted area bordering an intersection until another approaching vehicle passes.

  — The AVPS shall be capable of controlling the SV in such a way that the SV observes the pre-determined traffic rules within the facility (see 8.3.3).

— The AVPS shall be capable of operating the SV at its designed speed, including real-time adjustments to cope with the changing environment and conditions.

  — The achievable maximum speed induced by AVPS is 30 km/h: $V_{max,sv} \leq 30$ km/h

  — The operating speed shall not exceed limits defined within the parking facility (if any).

  — The achievable maximum speed shall be greater than 5 km/h: $V_{max,sv} \geq 5$ km/h

— The AVPS shall be capable of operating the SV on ramps up to ±17 %, independent of the structure (e.g. curve radius), and of maintaining a stationary condition on these ramps.

© ISO 2023 – All rights reserved
Documents
Document Sharing Hub
Full document details: BS ISO 23374-1:2023

— The AVPS shall be capable of responding to remote assistance commands (e.g. pausing at a location or proceeding to a way point), and shall determine when to start manoeuvring within a reasonable amount of time.

  — The AVPS shall prioritize remote assistant commands to stop, unless said command is determined by the AVPS to potentially create a hazardous situation.

  — The AVPS may pause the SV until the conditions are determined suitable to respond to remote assistance commands to proceed to a certain location.

— The AVPS shall be capable of controlling the SV in order to perform all of the parking manoeuvres specified in ISO 20900, including conformance to the requirements for end position accuracy.

— The AVPS shall be capable of positioning the SV within the pick-up area so as to facilitate the smooth boarding of the user and passengers as well as the loading of goods when applicable.

6.2.3 Additional requirements for operation under a mixed traffic environment

6.2.3.1 Requirements

The following additional requirements apply when the AVPS is operated in a mixed traffic environment.

— The AVPS shall be capable of avoiding collisions with other facility users, especially with VRUs.

  — The AVPS shall be capable of controlling the SV so that the SV does not approach other facility users in the SV's direction of travel by less than 100 cm. This distance may be reduced to 40 cm when other facility users are not in the SV's direction of travel:

    $D_{\mathrm{des,fu}} \geq 100$ cm, when other facility users are in the direction of travel.

    $D_{\mathrm{des,fu}} \geq 40$ cm, when other facility users are not in the direction of travel.

  — This distance can be unachievable in reasonably unavoidable situations. Examples of such limitations are provided in 6.2.3.3.

— The AVPS shall be capable of maintaining a distance greater than 200 cm from preceding vehicles while travelling on a pathway under non-emergency/non-hazardous situations: $D_{\mathrm{des,gap}} \geq 200$ cm. This requirement does not apply to parking manoeuvres

— The AVPS shall be capable of controlling the SV so that the SV does not block the pathway of other facility users.

  — The AVPS shall be capable of controlling the SV so that the SV does not approach objects other than facility users (e.g. walls, pillars, parked vehicles) by less than 40 cm when travelling faster than 5 km/h: $D_{\mathrm{des,ob}} \geq 40$ cm when $V_{\mathrm{des,sv}} \geq 5$ km/h.

— The AVPS shall determine a suitable stopping position of the SV relative to the destination so as not to disrupt the facility operation and/or interfere with other facility users. For example, when a parked vehicle is located in the area adjacent to the destination, a sufficient distance should be ensured so that the doors of the adjacent vehicle can be opened without contacting the SV.

NOTE "Other facility users" excludes AVPS-compliant vehicles in this context. It is possible to park two AVPS-compliant vehicles close together (e.g. for space saving purposes).

— The AVPS shall be able to avoid creating unnecessary traffic congestion. For example, by moving too close to vehicles that are attempting to park, or by entering an intersection when the intended direction of travel is blocked.

— The AVPS shall operate the SV in accordance with all local road and vehicle regulations, for example, using the SV's turn signals, turning on head lamps, and indicating that an ADS is engaged.

© ISO 2023 – All rights reserved

Documents
Document Sharing Hub
Full document details: BS ISO 23374-1:2023

6.2.3.2 Examples of scenarios in a mixed traffic environment

The following are examples of scenarios an AVPS can potentially encounter in a mixed traffic environment, and which system designers shall consider.

— Presence of obstacles in the direction of travel which could be damaged, or which could damage the SV, when driving along the pathway or when entering the parking spot. This includes, for example, bags, trolleys, wheelchairs and especially infants and babies regardless of situation/position (e.g. sitting, lying, standing-alone or in a trolley or baby carrier).

— Presence of overhanging obstacles without direct contact to the floor, which can lead to a collision. For example, bike racks and overhanging loads such as ladders or timbers which are attached to the rear of a parked vehicle.

— Possibility of humans suddenly entering the SV's path from behind occlusions such as pillars, parked cars, etc., humans located in the driving path behind an occlusion such as a wall or barrier and not visible to the SV until the SV makes the turn around the wall or barrier, and humans overtaking a slowly moving SV and then entering the SV's driving path.

— Presence of humans in close proximity to a stationary SV, especially when humans are extremely close to or in direct contact with the SV, whose movement can potentially result in collisions and injuries.

— Presence of humans on ramps, as well as before or after ramp edges.

— Avoidance of potential blockages which are normally resolved by human drivers (e.g. where the SV and another AVPS vehicle are waiting for each other). This is especially important as the usual eye-contact and gestures of human drivers are not possible.

— Possibility of crossing, oncoming and overtaking bicyclists.

6.2.3.3 Performance limitations

Hazardous situations with moving objects (e.g. pedestrians, bicyclists, and vehicles) that are not reasonably avoidable can occur in mixed traffic conditions. Referencing the driving capability of an experienced and attentive driver should be considered as the threshold for such situations. These scenarios are covered in the test scenarios defined in Clause 10.

Typical, but not exhaustive, situations where AVPS can potentially be unable to avoid collisions are as follows:

— a bicyclist or pedestrian approaches from an occluded lateral position where time to collision (TTC) is less than the time required by a human driver to stop the vehicle by applying full braking force;

— a parked vehicle suddenly drives out of a parking spot with high acceleration while the SV is already in close proximity to the parked vehicle;

— a pedestrian who deliberately tests the system's capabilities and suddenly jumps into the SV pathway directly in front of the SV.

6.3 Requirements for emergency stopping

6.3.1 General

The AVPS shall be capable of bringing the SV to a controlled stop under the situations defined in the following subclauses, at a minimum. The following requirements apply when an emergency stop is executed. The provisions of this subclause do not apply to a pause.

— The applied braking force to stop the SV depends on the driving situation. Other facility users, including vehicles approaching from behind, shall also be considered when performing an emergency stop.

© ISO 2023 – All rights reserved
Documents
Document Sharing Hub
Full document details: BS ISO 23374-1:2023

— As soon as an emergency stop is initiated, the hazard lights shall be turned on, unless otherwise regulated. They may be switched off when the situation is mitigated and traffic is not obstructed.

— Human interaction is needed to resume automated vehicle operation after emergency stopping has occurred (see 7.2.3).

6.3.2 DDT fallback[1]

The AVPS shall be capable in bringing the SV to a stable stopped condition in response to the following events.

— Occurrence of a failure in any sub-system which can or has become safety relevant (the type of failure that triggers an emergency stop is design-specific).

— Either or both R and V sub-systems are approaching ODD boundaries, or the driving environment changes such that the ODD is no longer fulfilled (e.g. blackouts, communication loss).

6.3.3 Response to operation stop commands

If an operation stop device (see 7.1.3) is activated, the AVPS initiates an operation stop command (see 9.3.3.13). The AVPS shall then bring the SV to a complete stop within the time specified in Table 4 after receiving the command.

Table 4 — Required time to stop the SV upon initiation of the operation stop command

$V_{des,sv}$ at the time of initiation	Requirement
0 km/h < $V_{des,sv}$ ≤ 10 km/h	Within 3 s
10 km/h < $V_{des,sv}$ ≤ 20 km/h	Within 4 s
20 km/h < $V_{des,sv}$ ≤ 30 km/h	Within 5 s
A maximum of 1 s is estimated (including sufficient buffer) from the time that the operation stop device was activated until the V sub-system receives the signal, giving the remaining time to actuate and bring the SV to a controlled stop.	

6.3.4 Detection of human activities

The AVPS recognizes unexpected human activities with the SV (see 6.7).

6.4 Requirements for destination assignment

6.4.1 General requirements

— The assigned destination shall be suitable in size for the SV to park, including any external attachments/loads (if applicable).

  — In some cases, a destination may be assigned so that part of the vehicle or its external attachments/loads exceed the boundaries of the destination. In this case, the destination shall be assigned such that the portion of the vehicle exceeding the boundaries of the destination does not obstruct the pathway of other vehicles. For exclusive traffic environments, vehicles that exceed the boundaries of destinations should be allowed to enter the operation zone only when such a non-interfering assignment is possible.

  NOTE An AVPS under exclusive traffic conditions is not required to detect irregular objects, including those protruding into the pathway for the SV.

  For example, by assigning a corner location of a parking facility to oversized vehicles, so that the obstructed pathway is not used by other vehicles. As another example, if a pathway becomes obstructed, the pathway may be excluded from the drivable area (see 8.3.3.6).

© ISO 2023 – All rights reserved

Documents
Document Sharing Hub
Full document details: BS ISO 23374-1:2023

— If the destination becomes unavailable during operation, an alternative destination shall be assigned.

— When a new destination is assigned via remote assistance during automated vehicle operation, this change shall be accepted accordingly by AVPS.

6.4.2 Type 1 systems

The R sub-system shall assign either a destination or a parking area consisting of multiple potential parking spots.

— If a parking area is assigned, the V sub-system shall determine a parking spot within the given parking area. While performing the DDT, the V sub-system shall search for available parking spots and report the chosen destination back to the R sub-system.

— If a single destination is assigned, the V sub-system shall adhere to the assignment.

6.4.3 Type 2 and 3 systems

The R sub-system shall assign a single destination.

6.5 Requirements for route planning

Either the V or R sub-system shall plan the route for the SV to reach the assigned destination. The following requirements shall apply.

— The route shall be created to reach the destination without violating traffic and facility-specific rules (e.g. driving the wrong way in a one-way zone).

  — If way points (intermediate destinations) are provided, the route shall be created to reach the destination via these way points.

  — For Type 1 systems, if a parking area is assigned, the V sub-system shall create a route to perform a search for available parking spot(s) in the assigned parking area.

— The most efficient route to the destination shall be created.

— The AVPS shall initiate one of the following actions if blocked areas are recognized in the planned route:

  — determine a new path within the route for the SV to avoid the blockage without changing the route, for example, to steer around a temporary construction zone;

  — plan a new route or change the destination;

  — communicate a request to the P sub-system to clear the blocked condition.

— When a new route is assigned via remote assistance, the new route shall be used accordingly.

6.6 Requirements for localization accuracy

6.6.1 Accuracy requirement relative to the digital map

AVPS shall continuously determine the position of the SV during automated vehicle operation. The following accuracy requirements shall apply.

— For Types 1 and 3, the V sub-system shall recognize the position of the SV on the digital map (see 8.3.3) with an absolute accuracy of 50 cm and within ±5 ° for the direction. This localization is mainly needed to find the assigned destination. The measurement of distances to localization

© ISO 2023 – All rights reserved
Documents
Document Sharing Hub
Full document details: BS ISO 23374-1:2023

markers, stationary objects and other facility users during automated vehicle operation is mainly performed by on-board sensors of the SV.

— For Type 2, the relative error of the position of the SV relative to objects detected by the R sub-system shall be within ±15 cm and within ±5 ° for the direction. The higher accuracy requirement compared to Types 1 and 3 is needed due to the functional allocation of the complete OEDR to the R sub-system.

6.6.2 Accuracy requirement of the end position relative to the destination

The end position of the SV relative to the boundaries of the destination (e.g. lane markings, curbs, neighbouring parked vehicles) shall conform to the requirements specified in ISO 20900.

6.7 Requirements for human activity recognition

The following requirements shall apply. See 9.3.3 for information on the transition of the system states that can potentially be caused by the recognition results below.

— The AVPS shall be capable of recognizing the user's intent to interact with the SV (e.g. by detecting the door of the SV being unlocked with a valid key).

— The AVPS shall be capable of recognizing overriding activities while the system is operating the SV. For example, an occupant who did not leave the SV at the drop-off area may open the door, operate the steering wheel, accelerator/brake pedal, or other interfaces defined by the system designer (see 9.3.3.18). These activities are considered as misuse by the user.

— The AVPS shall be capable of recognizing unexpected activities of other facility users from outside the SV. For example, other facility users can pull the door handle or try to open the trunk lid of the SV.

7 Requirements for management functions

7.1 Functions that influence the automated vehicle operation

7.1.1 General

Figure 3 shows the relationship of management functions that influence the automated vehicle operation. In addition, an optional function for the situation where automated vehicle operation is simultaneously performed to multiple vehicles is defined in 7.1.6.

7.1.2 Remote engagement

The VB sub-system shall be capable of remotely engaging the V sub-system upon request from the OB sub-system to dispatch the SV into driverless operation. See 9.3.3.7 for details.

NOTE Dispatching is a system operator's task performed through the OB sub-system, while remote engagement is performed by the VB sub-system. These functions/tasks are separately defined to allow flexible system design, although in some cases they can be performed by the same organization or common hardware.

7.1.3 Operation stop

The OB sub-system shall be capable of commanding the automated vehicle operation to stop by issuing an operation stop command (see 6.3.3 for reaction by the operation functions).

This function also provides other facility users and facility managers with the opportunity to immediately stop the automated vehicle operation (see 8.2.5 and 9.3.2.7).

© ISO 2023 – All rights reserved

Documents
Document Sharing Hub
Full document details: BS ISO 23374-1:2023

7.1.4 Remote assistance

7.1.4.1 General requirements

The OB sub-system shall be capable of providing remote assistance when the automated vehicle operation functions cannot resolve certain situations on their own and process necessary commands to R and/or V sub-systems.

For example, two AVPS vehicles are paused facing each other at a bottleneck created by an unexpected object on the corridor. In this case, the human operator can assign a new route to one of the AVPS vehicles to resolve the situation.

This function, at a minimum, shall provide the system operator with an interface with the opportunity to submit the following commands:

— Remote assistance shall provide the system operator with the capability to change the assigned destination and planned route.

— Remote assistance shall provide the system operator with the capability, at a minimum, to command the SV to “pause”, or “permission to proceed”.

  — In addition, commands such as “slow down”, “give way”, or “reverse” may be added.

7.1.4.2 Example use case for clearance evacuation

In comparison to the operation stop command where the SV(s) performs an immediate stop, the system operator can prefer to stop the operation without blocking a certain location (e.g. emergency pathways, in front of fire extinguishers) under certain situations (e.g. earthquakes, fire). In such cases, the remote assistance function may be utilized to evacuate the SVs to a nearby preferable location.

7.1.5 Remote disengagement

The VB sub-system shall be capable of disengaging the V sub-system upon receiving a report of reaching the destination (see 9.3.3.8).

The OB sub-system shall be capable of disengaging the V sub-system by triggering a transition to the suspend state (see 9.3.3.18).

7.1.6 Central control

The OB sub-system may be equipped with a central control function. Central control is an optional function mainly equipped with Types 2 and 3 (and also applicable to some Type 1 systems), which coordinates operations of multiple vehicles.

By utilizing such a function, interference between AVPS vehicles can be avoided. Under an exclusive traffic environment, collisions between vehicles can be avoided, and traffic efficiency can be optimized. Under a mixed traffic environment, potential conflict between two AVPS vehicles at certain location can be prevented, and right of way can be given to one of the two vehicles.

7.2 Other management functions

7.2.1 Compatibility and occupancy check

The OB/UB/VB backend sub-systems shall be capable of checking occupancy and compatibility of parking facilities with respect to the characteristics of the SV upon receiving user requests, and communicate the necessary information to the user.

© ISO 2023 – All rights reserved
Documents
Document Sharing Hub
Full document details: BS ISO 23374-1:2023

At a minimum, the following shall be confirmed when checking compatibility.

— Vehicle operation type and ODD definition between R and V sub-systems.

— SV outer dimensions and minimum turning radius relative to facility properties (e.g. ceiling height, corridor width, size of available parking spots, necessary turning circle).

— SV underbody clearance relative to the rate of change of slope angles within the parking facility.

— For Types 1 and 3, V sub-system object detection capability relative to the traffic environment category, existence of the central control function, and vehicles obstructing the pathway.

7.2.2 SV identification

The R/OB sub-systems shall be capable of identifying the (physical) SV against the V sub-system as the correct communication participant (see 8.2.3). The following list provides examples of means to perform SV identification.

— Localization proof: the V sub-system identifies the precise location of the SV in accordance with 6.6 and transmits the result to the R sub-system. A specific design is recommended when using coded markers to assist localization (see 8.2.3 and 8.3.2).

— Blink code transmission: the R sub-system sends a command to the V sub-system to activate exterior lights (e.g. by blinking the headlights). A suitable sensor installed in the parking facility will recognize the response of the SV.

— Licence plate recognition: the R sub-system will recognize the licence plate of the SV by using a camera installed in the parking facility upon arrival of the SV.

7.2.3 Response to incapacitation of the operation functions

The P sub-system shall be capable of performing the following activities when automated vehicle operation becomes incapacitated.

— Determine if the system capabilities have been recovered and automated vehicle operation may be resumed.

  — Resume automated vehicle operation if the conditions are satisfied,

  — If the conditions are not satisfied, physically access the SV and transfer the SV by means other than the automated vehicle operation. For example, by manually driving the SV or utilizing a tow truck.

7.2.4 Maintaining environmental conditions

The P sub-system shall be capable of maintaining the environmental conditions within the parking facility as defined in Clause 8. Therefore, the P sub-system should frequently check the environment within the parking facilities, especially for the conditions which cannot be detected or recovered by other sub-systems (see also 9.5). The frequency of the check depends on the characteristics of the parking facility.

For example, a parking facility located in the basement of a building is not likely to be affected by snow fall. Thus, compared to an outdoor facility, the frequency for checking the road surface conditions may be relatively low.

When environmental conditions are not satisfied, the P sub-system shall limit the operation of AVPS as needed.

The operation zone may be limited, for example, excluding areas covered with snow, which are not suitable for automated vehicle operation. The P sub-system is expected to communicate such a situation and stop accepting new reservations, retrieval request, or check-ins via AVPS.

Documents
Document Sharing Hub

© ISO 2023 – All rights reserved

Full document details: BS ISO 23374-1:2023

For another example, if an object is blocking the pathway, the P sub-system is expected to remove this object.

8 Requirements for the environment within parking facilities

8.1 General

This clause defines ODD elements and PFE requirements to be established within the parking facilities in which an AVPS can operate. Different requirements apply depending on the type classification defined in 5.4.

8.2 Common requirements

8.2.1 Operation zone

The operation zone shall be predetermined. For example, the operation zone may be the entire facility with a mixed traffic environment, or it may be a certain floor within a multi-story facility for an exclusive traffic environment.

The boundaries of the operation zone shall be defined with a sufficient buffer between the operation zone and the area where automated vehicle operation is not allowed. Since the positional accuracy requirement is within 50 cm for Types 1 and 3, this buffer zone shall be at least 50 cm when there are no detectible physical barriers (e.g. structured walls).

8.2.2 Drop-off and pick-up area

Both drop-off and pick-up areas shall be located within the operation zone. Both areas should be large enough to provide comfortable space for boarding and exiting of the driver and passengers as well as for loading/unloading of luggage. These areas should be located in places where they do not interfere with the traffic flow. There may be more than one drop-off and more than one pick-up area within an operation zone. Drop-off and pick-up areas may share the same space (e.g. separated by time).

8.2.3 SV identification area

When the SV reaches the assigned facility with a valid reservation, the AVPS performs SV identification (see also 7.2.2) in order to establish a session. SV identification may be performed at the drop-off area, anywhere inside the operation zone, or at the borders of the operation zone.

— If localization proof is used for SV identification as defined in 7.2.2, this document suggests placing at least three coded markers in the identification area, which conform to the description in Annex C. It is recommended to have five markers in the SV's field of view (see also information in Annex D) to allow the recognition in the case that the coded markers are (temporarily) blocked by objects. It is recommended to locate this area close to the entrance of the operation zone.

8.2.4 Wireless communication

There shall be no communication blind spots within the operation zone. Sufficient bandwidth should be secured for system operation. Subclause 9.2 specifies the general requirements for the communication interface.

The physical communication layer is not specified in this document and it is handled by the system design. Wireless communication may be realized by cellular network (e.g. 4G, 5G), wireless local area network (e.g. Wi-Fi, DSRC), the combination of the two, or other means suitable for the specific implementation.

© ISO 2023 – All rights reserved
Documents
Document Sharing Hub
Full document details: BS ISO 23374-1:2023

8.2.5 Operation stop device

One or more operation stop device(s), which can immediately stop the automated vehicle operation (see 6.3.3 and 7.1.3), shall be installed either in the facility or in a separate location where it can be manually operated, for example by other facility users, system operators, and facility managers. A typical implementation of this device is similar to the "red button" installed on heavy machinery or at train stations.

The number of operation stop devices and areas to be equipped vary depending on the system design and size and layout of the operation zone. For example, a multi-story facility may require such a device on each floor to stop the vehicles only on that particular floor.

8.2.6 Lighting

The illuminance should be greater than 20 lx throughout the operation zone.

The illuminance value shall be ensured at the following segments. It may be lower at the borders of these segments.

— Along the centre line of the SV pathways.

— Along the centre line of pedestrian walkways.

— In the centre of all potential destinations.

— If localization markers as described in 8.3.2 are used, at the location where a localization marker is placed.

An illuminance meter that conforms to ISO/CIE 19476 shall be used for measurement. The illuminance meter shall be positioned less than 20 cm away from the surface of the above items to measure the illuminance in a vertical direction (90° to the surface). See Figure 4 for an illustration of the orientation of the illuminance meter.

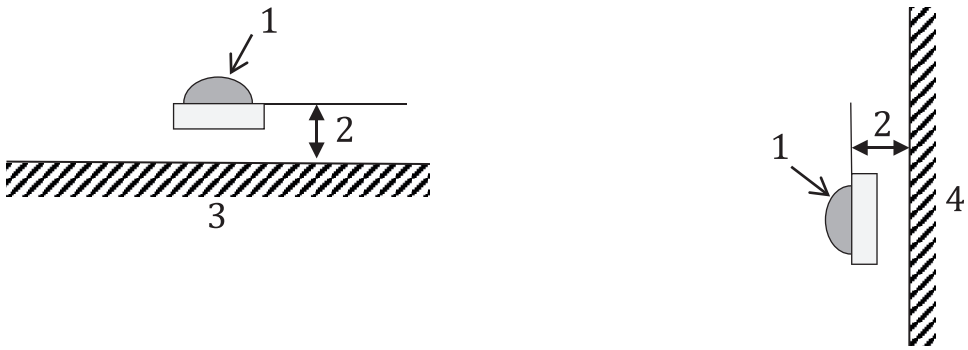

a) Measurement on horizontal surface **b) Measurement on vertical surface**

Key

1	illuminance meter	2	< 20 cm
3	horizontal surface (e.g. ground)	4	vertical surface (e.g. pillar with a localization marker)

Figure 4 — Illuminance measurement on horizontal and vertical surfaces

Note that the illuminance requirements specified in ISO 20900 do not apply to AVPSs.

© ISO 2023 – All rights reserved

Documents
Document Sharing Hub
Full document details: BS ISO 23374-1:2023

8.3 Vehicle-operation-type-dependent requirements

8.3.1 Detection capabilities of the R sub-system

8.3.1.1 General

Means to perform the OEDR and localization functions allocated to the R sub-system are typically established with detection sensors installed in the parking facility. For this reason, maintaining the necessary detection performance is classified as part of the environmental conditions.

As shown in Table 5, different vehicle operation types require different detection capabilities such as detecting obstacles along the vehicle pathway, detecting the current position of the SV, or detecting the occupancy of parking spaces. These detection capabilities may be provided by the same sensor component or provided separately.

Object detection capabilities are specified based on a mixed traffic environment. Capabilities could be reduced for operation under an exclusive traffic environment.

Table 5 — Necessary detection capabilities by the R sub-system per vehicle operation types

Vehicle operation type	Object detection	Localization	Occupancy of destinations
Type 1	Optional	Not required	Optional
Type 2	Required	Required	Required
Type 3	Recommended	Not required	Required

8.3.1.2 Type 1

It is optional to provide detection capabilities to support the OEDR function for Type 1. Object detection capabilities may be provided by the R sub-system for traffic management purposes.

For example, object detection sensors installed at intersections can improve the traffic flow by providing pause/proceed commands to SVs.

8.3.1.3 Type 2

The R sub-system shall be capable of performing the OEDR and localization functions necessary for automated vehicle operation. For this reason, the detection capability of the R sub-system shall cover the entire operation zone without blind spots. The R sub-system shall detect objects, localize the SV, and detect occupancy of destinations.

8.3.1.4 Type 3

The R sub-system shall be capable of detecting available destinations within the operation zone. Object detection capability is recommended mainly for robust detection and efficient traffic management.

Guidelines for the detailed implementation are provided in Annex H

8.3.2 Localization markers

For Types 1 and 3, means to assist localization of the SV shall be provided as a part of the environment within parking facilities. (For Type 2 systems, localization is performed through detection sensors as mentioned in 8.3.1.3).

In order to support the V sub-system in fulfilling the localization requirements specified in 6.6, a sufficient number of coded and/or anonymous markers shall be placed within the operation zone.

© ISO 2023 – All rights reserved
Documents
Document Sharing Hub
Full document details: BS ISO 23374-1:2023

When installing either coded markers or the combination of coded and anonymous markers, the description provided in Clause C.2 can be adopted. Annex D provides additional information for placing these markers in the operation zone.

When installing anonymous markers only, the description provided in Clause C.3 can be adopted. Clause H.1 provides additional information for placing anonymous markers in the operation zone.

In addition to the coded markers mentioned above, line markings described in Annex E may also support localization.

8.3.3 Digital maps

8.3.3.1 General

All AVPS vehicle operation types utilize static information from digital maps.

Type 1 and 3 vehicle operation types utilize high definition digital maps, which contain the semantic elements described in the following sub-clauses.

— For Type 1 systems, the same semantic information of a compatible map shall be used by all relevant sub-systems.

— For Type 3 systems, the high definition digital map is only used by the R sub-system, and only the information related to reaching the destination is communicated through the operation interface.

Type 2 vehicle operation type requires general information (not specific compared to Types 1 and 3 mentioned above) about the geometry of the parking facility and operation zone which may be provided by a digital map, a facility layout, or other suitable means.

8.3.3.2 Requirements for Type 1 and 3 systems

The digital map used by Type 1 and 3 systems shall contain the following semantic descriptions that are up to date in terms of the actual conditions within the parking facility. All objects defined in following sub-clauses shall carry a unique identifier within the operation zone to enable communication between the sub-systems.

NOTE 1 For example, at the time of writing, version 2.5.4 of the NDS (Navigation Data Standards)[2] fulfils these requirements.

NOTE 2 Currently, the NDS is not the prescribed map standard. Other map standards fulfilling the requirements in 8.3.3 are also allowed.

The accuracy of the object location shall be within 10 cm relative to the localization markers within a radius of 30 m. The accuracy in absolute world coordinates is required to be within 1 m for linkage to map data outside the parking facility.

8.3.3.3 Road graph

A Road graph is a network of pathways through the parking facility.

A road graph shall consist of edges and nodes describing all possible traversals through the parking facility, and direction of lanes and possibilities to connect from one edge to the next in an absolute 3D space.

8.3.3.4 Geographical boundary of the parking facility

The geographical boundary of the parking facility is a polygon around the boundaries of an AVPS-conformant parking facility.

© ISO 2023 – All rights reserved

Documents
Document Sharing Hub
Full document details: BS ISO 23374-1:2023

8.3.3.5 Operation zone

The operation zone is a polygon, or a series of polygons (in a multi-level facility), that is equipped with integrity protection mechanisms defining the outer boundaries for performing automated vehicle operation within the parking facility. A road graph within the operation zone shall be linked to an external road network at the boundaries of the operation zone.

8.3.3.6 Drivable area

A driveable area is a polygon representation within the operation zone suitable for vehicle operation which covers destinations (such as parking spots) and all of the necessary areas that are needed to reach destinations. At a minimum, fixed structures, such as walls and pillars shall be excluded from the drivable area.

8.3.3.7 Parking spots and service bays

Parking spots and service bays are location descriptions consisting of a geometric definition via 4 points on 3D space as well as relating attributes (e.g. charging bay, space for the handicapped), if applicable.

Parking spots and service bays shall be linked to a road graph to determine routes. Existence of a link to a lane should also imply that the destination can be reached from that direction (e.g. no physical barrier or forbidding road marking between the lane and the spot).

NOTE Parking spots and service bays can be defined as a "Space" with related attributes within ISO/ TS 5206-1:—[1].

8.3.3.8 Drop-off and pick-up areas

Drop-off and pick-up areas are an area description in the form of 3D coordinates and a type specifier (drop-off or pick-up).

Drop-off and pick-up areas should be linked to the road graph (see 8.2.2).

8.3.3.9 Localization markers

Localization markers are coded and anonymous markers placed in the parking facility (see 8.3.2).

Localization markers shall be measured in their 3-dimensional position and 3-dimention orientation, and shall carry their types and IDs in 3D in the map.

8.3.3.10 Pedestrian walkways

Areas intended for pedestrian movement. At a minimum, designated pedestrian crossings and walkways within the operation zone on the surface of the vehicle pathways shall be included when present.

This information supports the AVPS to reduce risk within mixed traffic environments.

8.3.3.11 Traffic rules

Traffic rules are pre-determined rules concerning traffic within the parking facility. At minimum, speed limits, directionality of traffic, stopping locations, and rights of way shall be included when present within the operation zone.

1) Under development. Stage at the time of publication: ISO/DTS 5206-1:2023.

© ISO 2023 – All rights reserved
Documents
Document Sharing Hub
Full document details: BS ISO 23374-1:2023

8.4 Traffic environment category dependent requirements

8.4.1 Mixed traffic

For system installation, the parking facility structure shall take into consideration relevant local regulations/guidelines for pathway width, minimum curvature, ramp angle, dimensions for parking spaces, etc. See information provided in Annex F for an example of facility structure requirements in case of absence of such local regulations/guidelines.

— If speed bumps are placed in the operation zone, the maximum height shall be limited to 8,5 cm to avoid unintended detection results.

— If objects are intentionally placed to prohibit the entrance of vehicles to certain areas, the object used to represent the border shall be larger than the size of the object specified in B.1.

Although this document does not require a certain surface condition to parking facilities for mixed traffic environments, it should be noted that systems which only conform to the minimum requirements defined in this document are based on operation on paved surfaces (see 6.1.3).

8.4.2 Exclusive traffic

8.4.2.1 Objects in the operation zone

There shall be no objects within the operation zone which could damage the SV upon physical contact (e.g. objects larger than a golf ball, objects and debris with sharp edges).

8.4.2.2 Road surface condition

The road surface within the operation zone shall be a flat pavement with no irregular bumps/holes, which could negatively affect the automated vehicle operation.

8.4.2.3 Access control gates

Access control gates shall be installed at the border of the operation zone to allow entry of vehicles with a valid session only, and to prevent other facility users from entering the operation zone. Visible signs should be installed as necessary.

8.4.2.4 Dividing barriers

Dividing barriers shall be installed along the outer edge of the operation zone to restrict entrance of other facility users, especially humans. Visible signs should be installed as necessary.

8.4.2.5 Drop-off and pick-up areas

Means to prevent initiation of automated vehicle operation when humans (e.g. user, passenger) are present in the drop-off or pick-up areas shall be provided, for example, by surveillance or physical barriers. This is due to these areas temporarily becoming a mixed traffic environment in order to allow humans to board and exit an SV.

9 Requirements for overall system operation

9.1 General

The AVPS is a cooperative system comprised of physically separated sub-systems, in many cases provided by different organizations. For this reason, the communication interface is crucial for overall

© ISO 2023 – All rights reserved

Documents
Document Sharing Hub
Full document details: BS ISO 23374-1:2023

system operation. Communication among the different organizations is the key element for establishing interoperability. As such:

— general requirements for the communication interface are specified in 9.2;

— the minimum set of data elements that need to be communicated within an AVPS is described based on the logical architecture shown in Figure 2, and linked to the transition conditions specified in 9.3.

Further detailed implementation beyond what is specified in this document is up to the system design.

9.2 Requirements for the communication interface

9.2.1 General requirements

— The AVPS shall be capable of processing the following requests from the user on demand. These requests are processed independently of an active session. For example, after entering an AVPS-conformant parking facility, the user may request for availability of a compatible parking facility near the user's next destination.

  — Availability request (see A.5.1).

  — If applicable, payment requests.

— The AVPS shall be capable of processing on-demand mission requests from the user when a valid reservation or session exists. For example, the user may request an additional service while the SV is being parked.

  — At a minimum, the AVPS shall be capable of processing a retrieval request when a valid session exists (see A.5.2).

  — The AVPS may also process additional service-related requests when a valid reservation or session exists.

— A reservation shall be established before a session is created. The user is also expected to confirm the parking facility, service provider and terms and conditions of the service when a reservation is established. However, this document does not specify means to establish such reservation and user confirmation.

  — The three backend sub-systems shall be capable of performing a communication interface conformance check any time a valid reservation exists (see A.4.1).

— A session shall be created upon successful handover of the authority from the user to the service provider at the latest. The created session shall be maintained at least until successful handover of the authority from the service provider to the user, or when the service provider decides to revoke the session.

  — The AVPS shall be capable of supporting, at a minimum, event-based communication regarding the condition of the SV and status of the session and/or mission when state transition occurs between the system management states shown in Figure 5 (this does not include system states within the automated vehicle operation). The information shall be communicated to the UB sub-system via the OB sub-system while a valid session exists.

— A mission shall be assigned when dispatching an SV and maintained until disengaged.

  — The operation interface shall be capable of (re)establishing a valid time synchronization for any communication on that channel while a valid mission exists.

  — The V sub-system shall be capable of providing a periodic message regarding the condition of the SV while a valid mission exists (see A.3).

© ISO 2023 – All rights reserved
Documents
Document Sharing Hub
Full document details: BS ISO 23374-1:2023

9.2.2 Security goals

System designers shall perform risk analysis and implement mechanisms to avoid and protect the AVPS from security hazards. The following list provides examples of security hazards specific to AVPS.

— Vehicle theft.

  — For example, unauthorized command to unlock the SVs doors and turn on the ignition transmitted by a malicious source may lead the SV to be manually transferred outside of the facility.

— Safety hazards.

  — For example, unintended DDT relevant commands transmitted by a malicious source may lead the SV to collide with a facility user.

— Private information leakage.

  — For example, malicious attacks to the backend sub-systems may lead to leakage of private information of the customer and vehicle.

— Availability degradation or loss.

  — For example, denial of service attacks may lead to degradation or loss of the system performance.

9.2.3 Security requirements

— The AVPS shall be capable of (re)establishing secure channels among the sub-systems throughout a reservation in order to achieve the security goals.

— The AVPS shall be capable of (re)establishing mutual authentication of the management interfaces when a valid session exists in order to achieve the security goals.

— The AVPS shall be capable of (re)establishing mutual authentication of the operation interfaces when a valid mission exists in order to achieve the security goals.

9.3 System states and transition diagram

9.3.1 State transition diagram

Figure 5 illustrates the state transition based on the condition of a single SV. Therefore, the AVPS manages multiple states when simultaneously managing multiple SVs. The AVPS shall conform to the contents specified herein. Further implementation beyond the following specifications is up to system design.

— The inner rectangular box with a dotted line labelled “Automated vehicle operation” indicates that a mission has been assigned, and the SV is automatically operated by an AVPS through the states within the box. Performance requirements associated with these conditions are specified in Clause 6.

— The outer rectangular box with a solid line labelled “System management” indicates that a session has been established and the SV is managed by an AVPS in the states within the box. Functional requirements associated with these conditions are specified in Clause 7.

Table 6 provides descriptions of the keys used in Figure 5 and the clauses where relevant transition conditions and communication sequences are mentioned.

— Conditions described with phrases, such as, “detection of…” or “occurrence of…” trigger an immediate transition.

© ISO 2023 – All rights reserved

Documents
Document Sharing Hub
Full document details: BS ISO 23374-1:2023

— Conditions described with phrases, such as "… is complete" or "… are confirmed" may be fulfilled at an earlier point in time before the transition occurs.

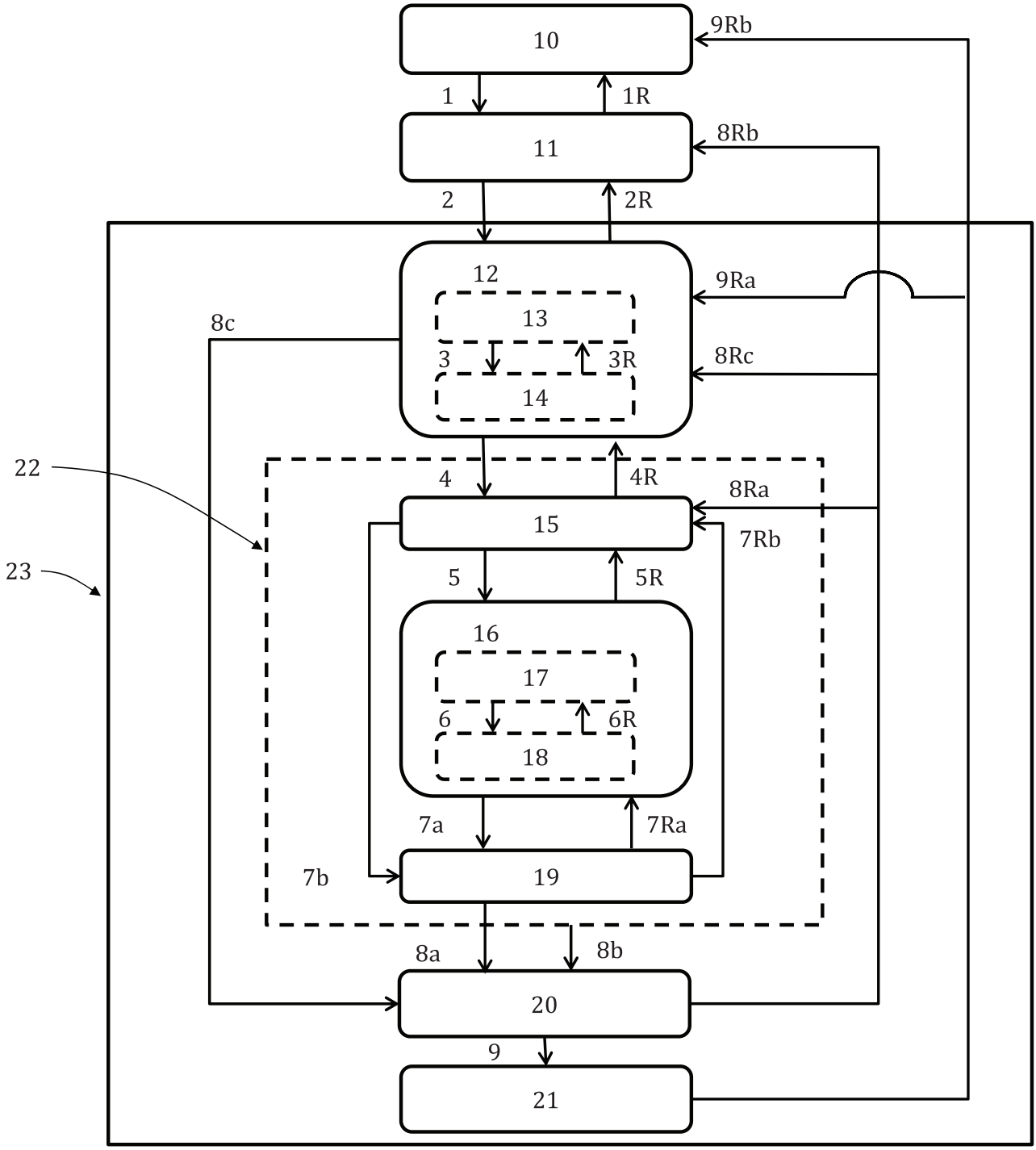

Key

10	inactive	11	ready
12	standby	13	(sub-state) wait
14	(sub-state) sleep	15	depart/ arrive
16	normal	17	(sub-state) drive
18	(sub-state) pause	19	temporary error state
20	suspend	21	recovery

© ISO 2023 – All rights reserved
Documents
Document Sharing Hub
Full document details: BS ISO 23374-1:2023

22 automated vehicle operation 23 system management

Figure 5 — State transition diagram

Table 6 — Description of the keys in Figure 5

Key	Description	Transition	Communication
1	SV identification complete	9.3.3.1	A.2.1
1R	Check-out sequence is complete	9.3.3.2	A.2.2
2	User hands over authority	9.3.3.3	A.2.3
2R	User receives authority	9.3.3.4	A.2.4
3	Sleep command	9.3.3.5	A.2.5
3R	Wake-up command	9.3.3.6	A.2.6
4	Mission assigned	9.3.3.5	A.2.7
4R	Mission accomplished	9.3.3.8	A.2.8
5	Destination and route confirmed	9.3.3.9	A.2.9
5R	Reached destination	9.3.3.10	A.2.10
6	Design specific events (e.g. object in way)	9.3.3.11	
6R	Design specific events (e.g. object cleared)	9.3.3.12	
7a	Error detected	9.3.3.13	
7b	Error detected	9.3.3.14	
7Ra	Error that caused transition 7a solved	9.3.3.15	
7Rb	Error that caused transition 7b solved	9.3.3.16	
8a	Automated vehicle operation is incapacitated	9.3.3.17	
8b	External trigger to perform an emergency stop	9.3.3.18	
8c	Transition 3 or 4 unsuccessful, human activity	9.3.3.19	
8Ra	Cause of suspend cleared	9.3.3.20	
8Rb	User receives authority.	9.3.3.21	A.2.4
8Rc	Cause of transition 8c cleared	9.3.3.22	
9	Reengagement unsuccessful	9.3.3.22	
9Ra	System capabilities are recovered	9.3.3.24	
9Rb	System capabilities cannot be recovered	9.3.3.25	A.2.2

9.3.2 Definition and requirements of system states

9.3.2.1 Inactive state

A valid session does not exist. The SV may be located within the operation zone.

9.3.2.2 Ready state

SV identification is complete, session is established, and the user has the authority.

— For Type1 systems, the user may manually operate the SV within the operation zone.

— For Type 2 and 3 systems, the SV is located within the drop-off area.

© ISO 2023 – All rights reserved

Documents
Document Sharing Hub
Full document details: BS ISO 23374-1:2023

9.3.2.3 Standby state

9.3.2.3.1 General

The SV is managed by the AVPS and is waiting for further commands or user retrieval. The following requirements shall apply.

— SV maintains a stationary condition.

— Doors and windows are locked.

The standby state consists of two sub-states: “wait” and “sleep”.

9.3.2.3.2 Wait sub-state

SV shall be capable of immediate transition to the depart/arrive state.

9.3.2.3.3 Sleep sub-state

SV is in a low energy consumption condition. In this sub-state, the communication link of the operation interface may be temporarily disconnected. The following requirements shall apply in addition to 9.3.2.3.1.

— The operation interface can be re-established on demand.

— The estimated duration for maintaining the sleep sub-state shall be communicated from the V sub-system to the R sub-system.

— To be capable of transitioning to the wait sub-state within 3 min after issuing a wake-up command.

During this state, the SV may carry out maintenance (e.g. online updates). During such maintenance, wake-up/mission requests may not be processed.

9.3.2.4 Depart/Arrive state

The AVPS determines the destination and route, or waits for further commands after reaching the destination.

The following requirements shall apply:

— SV maintains a stationary condition.

— Position of the SV is verified by the AVPS.

The following requirements shall also apply in order to transition to the normal state.

— Performs destination assignment and route planning (refer to 6.4, 6.5 and A.2.7).

— Capable of starting performing the DDT within 10 s after receiving command, noting that actual movement of the SV is sometimes prevented by environmental conditions (e.g. objects in the direction of travel).

9.3.2.5 Normal state

9.3.2.5.1 General

The AVPS operates the SV in this state. The planned destination and route may be changed during this state. The following requirement shall apply:

— Conform to the requirements specified in 6.2 and 6.3.

© ISO 2023 – All rights reserved
Documents
Document Sharing Hub
Full document details: BS ISO 23374-1:2023

The normal state consists of two sub-states, “drive” and “pause”. One example cause of the transition between these two sub-states is when an AVPS recognizes an object in the path. The AVPS will stop the SV in front of the object (transition to pause) and will resume operation when the object is no longer in the SV’s path (transition to drive).

9.3.2.5.2 Drive sub-state

SV is moving.

9.3.2.5.3 Pause sub-state

SV is stationary.

It is important to distinguish between this sub-state and other vehicle stationary conditions, such as temporary error or suspend states.

9.3.2.6 Temporary error state

The AVPS recognizes the occurrence of a temporary error. Depending on the type of the error, the AVPS may continue automated vehicle operation.

The following requirements shall apply.

— Duration of the temporary error-state shall be limited to the shortest amount of time defined by one of the sub-systems. Depending on the type of error, the defined time to transition to suspend state may vary, including immediate transition.

EXAMPLE Although the designer of the V sub-system defines 5 min as the threshold to transition to the suspend state, the owner of the parking facility prefers a maximum of 3 min to avoid congestion on a pathway. Therefore, the OB sub-system is designed to initiate a command to transition the SV to the suspend state. In this case, 3 min will apply.

— If transition occurred from normal state (7a), the AVPS may either initiate an emergency stop (see 6.3), continue operation, or perform other means (e.g. degraded operation, comfort stop) to the SV depending on the type of error.

— If transition occurred from preparation state (7b), the AVPS maintains the SV in a stationary condition.

Events to be considered as temporary errors are up to system design. The following list provides typical examples of such events.

— A change in the driving environment that is not considered to be an immediate out of ODD condition but can potentially lead to an out of ODD condition after a certain period of time if the condition worsens. For example, invalid detection of a single localization marker can be determined as a temporary error if the AVPS is still able to localize the SV by detecting another marker.

— A transient loss of wireless communication connectivity.

— A sign of a system failure.

9.3.2.7 Suspend state

The AVPS becomes incapacitated to perform or continue automated vehicle operation without sufficient measures taken by the P sub-system (see 7.2.3).

The following requirements shall apply.

— If the SV is moving, the AVPS shall perform an emergency stop (refer to 6.3) of the SV.

— If the SV is not moving, it shall maintain a stationary condition.

© ISO 2023 – All rights reserved

Documents
Document Sharing Hub
Full document details: BS ISO 23374-1:2023

— Hazard lamps of the SV shall be turned on (except when the last transition was 8c).

9.3.2.8 Recovery state

The SV or PFE is physically accessed by the P sub-system in this state. See 7.2.3 for examples.

— Hazard lamps of the SV may be turned off.

Recovery state duration is not limited and this state may be applied as long as necessary. For example, multiple actions can be necessary to transition to the standby state, or user retrieval can be necessary to trigger a check-out in order to complete the session.

9.3.3 Transition conditions

9.3.3.1 Transition 1, from inactive to ready

All of the following conditions are satisfied at a minimum.

— Valid reservation exists.

— Communication interface compliance check (see A.4.1) is complete.

— Check-in sequence (see A.2.1) is complete.

— SV identification (see 7.2.2) is complete.

9.3.3.2 Transition 1R, from ready to inactive

The following condition is satisfied at a minimum.

— Check-out sequence (see A.2.2) is complete.

9.3.3.3 Transition 2, from ready to standby

All of the following conditions are satisfied at a minimum.

— Handover sequence (see A.2.3) is complete.

— SV is in a stationary condition, doors and windows are locked.

— The AVPS either confirms declaration by the user, or detects the following conditions:

  — there are no humans or animals in the SV;

  — there is no attachment on the SV that causes the SV to exceed the parking facility's allowable size limits;

  — SV is within the drop-off area.

— The AVPS confirms explicit user command to hand over authority to the service provider.

— R and V sub-subsystems are capable of performing automated vehicle operation.

9.3.3.4 Transition 2R, from standby to ready

Both of the following conditions are satisfied at a minimum.

— Handback sequence (see A.2.4) is complete.

— The AVPS detects user intent to receive authority.

© ISO 2023 – All rights reserved
Documents
Document Sharing Hub
Full document details: BS ISO 23374-1:2023

9.3.3.5 Transition 3, from wait to sleep

Either one of the following conditions is satisfied.

— Sleep sequence (see A.2.5) is complete.

— Predefined time for the V sub-system to be in the wait sub-state has elapsed. The predefined time shall be longer than 30 s.

9.3.3.6 Transition 3R, from sleep to wait

Either one of the following conditions is satisfied:

— Wake-up sequence (see A.2.6) is complete.

— Detects valid input through SV on-board interfaces (e.g. main power train is activated with a valid key).

9.3.3.7 Transition 4, from standby to depart/arrive

The following condition is satisfied at a minimum.

— Mission assignment sequence (see A.2.7) is complete.

9.3.3.8 Transition 4R, from depart/arrive to standby

Both of the following conditions are satisfied at a minimum.

— Mission accomplished sequence (see A.2.8) is complete.

— SV is located at the intended destination or pick-up area.

9.3.3.9 Transition 5, from depart/arrive to normal

The following condition is satisfied at a minimum.

— Destination and route sequence (see A.2.9) is complete.

9.3.3.10 Transition 5R, from normal to depart/arrive

All of the following conditions are satisfied at a minimum.

— SV reached destination.

— SV is in a stationary condition.

— Destination reached sequence (see A.2.10) is complete.

9.3.3.11 Transition 6, from drive to pause

Design-specific conditions. Examples are provided in the following list.

— An obstacle is blocking the path.

— Approaching a facility-defined stop location (e.g. at intersections)

9.3.3.12 Transition 6R, from pause to drive

Design-specific conditions. Examples are provided in the following list.

— Obstacle previously blocking the path no longer exists.

© ISO 2023 – All rights reserved

Documents
Document Sharing Hub
Full document details: BS ISO 23374-1:2023

— Intersection is clear to proceed.

9.3.3.13 Transition 7a, from normal to temporary error

The following condition is satisfied at a minimum.

— Error is detected.

9.3.3.14 Transition 7b, from depart/arrive to temporary error

At least one of the following conditions is satisfied.

— Error is detected.

— Transition 5 (see 9.3.3.9) unsuccessful.

9.3.3.15 Transition 7Ra, from temporary error to normal

Both of the following conditions are satisfied.

— Cause of transition 7a is no longer valid.

— Previous state was normal state.

9.3.3.16 Transition 7Rb, from temporary error to preparation

Both of the following conditions are satisfied.

— Cause of transition 7b is no longer valid.

— Previous state was preparation state.

9.3.3.17 Transition 8a, from temporary error to suspend

At least one of the following conditions is satisfied.

— Shortest amount of time defined by one of the sub-systems to transition to suspend state has elapsed.

— OB sub-system commands transition.

9.3.3.18 Transition 8b, from automated vehicle operation to suspend

At least one of the following conditions is satisfied.

— Operation stop command (see 7.1.3) is initiated.

— Overriding activity (see 6.7, second bullet point) is detected.

— Unexpected activities of other facility users (see 6.7, third bullet point) are detected.

— OB sub-system commands a transition to the suspend state.

— Other system designer-defined conditions (e.g. collision has occurred, bonnet or trunk opened).

9.3.3.19 Transition 8c, from standby to suspend

At least one of the following conditions is satisfied.

— Transition 4 (see 9.3.3.7) unsuccessful.

© ISO 2023 – All rights reserved
Documents
Document Sharing Hub
Full document details: BS ISO 23374-1:2023

— Overriding activity (see 6.7, second bullet point) is detected.

— Unexpected activities of other facility users (see 6.7, third bullet point) are detected.

9.3.3.20 Transition 8Ra, from suspend to depart/ arrive

The P sub-system has confirmed that the cause of suspend is resolved and current mission can be resumed.

9.3.3.21 Transition 8Rb, from suspend to ready

All of the following conditions are satisfied.

— The user's intent to receive authority (see 6.7, first bullet point) is detected.

— In case a valid mission exists, the mission shall be terminated (see A.2.8).

— Handback sequence (see A.2.4) is complete.

9.3.3.22 Transition 8Rc, from suspend to standby

The P sub-system has confirmed that the cause of suspend is resolved. If a valid mission exists, the mission shall be terminated (see A.2.8).

9.3.3.23 Transition 9, from suspend to recovery

The P sub-system makes a decision regarding physical access to the SV (see 7.2.3). If a valid mission exists, the mission shall be terminated (see A.2.8).

9.3.3.24 Transition 9Ra, from recovery to standby

The P sub-system has confirmed that the cause of suspend is no longer valid, estimates that automated vehicle operation is possible, and attempts to determine if a new mission can be assigned.

All of the following conditions are satisfied at a minimum.

— SV is in a stationary condition, doors and windows are locked.

— P-sub system confirms the following conditions:

  — there are no humans or animals in the SV;

  — there is no attachment on the SV that causes the SV to exceed the parking facility's allowable size limits;

  — SV is within the operation zone.

— P-sub system communicates readiness of the state transition to standby.

— R and V sub-subsystems are capable of performing automated vehicle operation.

9.3.3.25 Transition 9Rb, from recovery to inactive

The following conditions are satisfied.

— A system failure in one or more of the sub-systems cannot be recovered.

— Check-out has been triggered/completed

— OB sub-system revokes system authority.

© ISO 2023 – All rights reserved

Documents
Document Sharing Hub
Full document details: BS ISO 23374-1:2023

9.4 Suspend condition codes

In general, when the automated vehicle operation becomes suspended (see 9.3.2.7), the change in state shall be communicated within the AVPS. When the suspend condition is determined to conform to one of the conditions shown in Table 7, the suspend code shall be communicated to the P sub-system accompanied with a time stamp and location information.

The suspend conditions are transmitted with a combination of two or more layers. The first layer is classified by a fault or failure and determines if the suspend condition is reported from the R or V sub-system. This information assists the P sub-system in identifying the location.

The second layer provides additional information of either the cause of the fault, or possible reaction by the P sub-system upon failure of the V sub-system. This information benefits in determining the reaction (see 7.2.3).

Sub-system designers or related organizations may add further categories beyond layer 2 and may also add symbols in layers 1 and 2 that cannot be classified into the provided categories. Such additional categories shall be provided to the relevant organizations (e.g. facility manager, system operator).

The P sub-system is expected to take prompt action upon receiving the suspend condition codes.

The suspend condition codes in Table 7 focus only on situations that occur after mission assignment. Therefore, faults and failures which occur before mission assignment or when a mission is being assigned are not included. It is recommended to prepare alternative means for the AVPS to recognize unsuccessful session establishment or mission assignments.

Table 7 — Suspend condition categories and codes

Layer 1		Layer 2		Example/description
A	SV or V sub-system fault	01	Low fuel/battery	
		02	Internal overriding activity	Steering wheel
		03	External human activity	Door handle, trunk
		04	Uneven road surface	Pothole, ice
		05	Perception disturbance	Dirt on sensor head
		06	Marker detection unsuccessful	
		07	No signal from R sub-system	
		08	No signal from VB sub-system	
		09	Mission time-out	
		10	Invalid destination	Occupied
		11	Invalid route	Blocked
		12	Collision detected	
		13	Unavoidable obstacle in pathway	
		14	Unsuitable road surface	
		15	Invalid map data	
		16	User confirmation time-out	
		17	Retrieval time-out	
		18	User intervention	Remote key operation
			(other)	

© ISO 2023 – All rights reserved
Documents
Document Sharing Hub
Full document details: BS ISO 23374-1:2023