BS ISO 23555-2:2022

BSI Standards Publication

Gas pressure safety and control devices for use in gas transmission, distribution and installations for inlet pressures up to and including 10 MPa

Part 2: Gas pressure regulator

Documents
Document Sharing Hub

Full document details: BS ISO 23555-2:2022

National foreword

This British Standard is the UK implementation of ISO 23555-2:2022.

The UK participation in its preparation was entrusted to Technical Committee GSE/22, Safety and control devices for gas and oil burners and gas burning appliances.

A list of organizations represented on this committee can be obtained on request to its committee manager.

Contractual and legal considerations

This publication has been prepared in good faith, however no representation, warranty, assurance or undertaking (express or implied) is or will be made, and no responsibility or liability is or will be accepted by BSI in relation to the adequacy, accuracy, completeness or reasonableness of this publication. All and any such responsibility and liability is expressly disclaimed to the full extent permitted by the law.

This publication is provided as is, and is to be used at the recipient's own risk.

The recipient is advised to consider seeking professional guidance with respect to its use of this publication.

This publication is not intended to constitute a contract. Users are responsible for its correct application.

© The British Standards Institution 2022
Published by BSI Standards Limited 2022

ISBN 978 0 539 00333 8

ICS 23.060.40; 27.060.20; 91.140.40

Compliance with a British Standard cannot confer immunity from legal obligations.

This British Standard was published under the authority of the Standards Policy and Strategy Committee on 28 February 2022.

Amendments/corrigenda issued since publication

Date	Text affected

Documents
Document Sharing Hub

Full document details: BS ISO 23555-2:2022

INTERNATIONAL STANDARD

ISO 23555-2

First edition
2022-01

Gas pressure safety and control devices for use in gas transmission, distribution and installations for inlet pressures up to and including 10 MPa —

Part 2:
Gas pressure regulator

Reference number
ISO 23555-2:2022(E)

Documents
Document Sharing Hub

© ISO 2022

Full document details: BS ISO 23555-2:2022

COPYRIGHT PROTECTED DOCUMENT

© ISO 2022

All rights reserved. Unless otherwise specified, or required in the context of its implementation, no part of this publication may be reproduced or utilized otherwise in any form or by any means, electronic or mechanical, including photocopying, or posting on the internet or an intranet, without prior written permission. Permission can be requested from either ISO at the address below or ISO's member body in the country of the requester.

ISO copyright office
CP 401 • Ch. de Blandonnet 8
CH-1214 Vernier, Geneva
Phone: +41 22 749 01 11
Email: copyright@iso.org
Website: www.iso.org

Published in Switzerland

© ISO 2022 – All rights reserved

Documents
Document Sharing Hub

Full document details: BS ISO 23555-2:2022

Contents

Page

Foreword ... **v**

Introduction ... **vi**

1 Scope ... **1**

2 Normative references ... **2**

3 Terms and definitions and symbols ... **2**
3.1 Terms and definitions ... 2
3.1.1 General terms ... 2
3.1.2 Terms related to flow ... 5
3.1.3 Terms related to variables in the controlling process ... 6
3.1.4 Terms related to the controlled process ... 6
3.1.5 Terms related to functional performance ... 6
3.1.6 Feature related to accuracy ... 8
3.1.7 Terms related to lock-up behaviour ... 8
3.1.8 Terms related to design and tests ... 10
3.1.9 Summary of symbols for creep relief valves ... 10
3.2 Symbols ... 10

4 Classification ... **11**
4.1 General ... 11
4.2 Temperature classes ... 11
4.3 Strength types ... 11
4.4 Fail conditions ... 11

5 Materials ... **11**

6 Design ... **11**
6.1 General ... 11
6.2 Strength of metallic body and its inner metallic partition walls ... 12
6.3 Other pressure metallic containing parts of integral and differential strength controls ... 12
6.4 Strength of parts transmitting actuating forces ... 12
6.5 Strength of diaphragms (elastomeric parts) ... 12
6.6 Welding ... 12
6.7 Main function of a regulator ... 12
6.7.1 General ... 12
6.7.2 Gas pressure regulators with associated safety devices ... 13

7 Performance and testing requirements ... **14**
7.1 General ... 14
7.1.1 Approach to stable product phase ... 14
7.1.2 Test conditions ... 15
7.1.3 Test tolerances ... 15
7.1.4 Overview table ... 15
7.2 Requirements ... 16
7.2.1 Test rig ... 16
7.2.2 Classification of stable production tests ... 16
7.2.3 Dimensional check and visual inspection ... 16
7.2.4 Shell strength ... 16
7.2.5 External/Internal tightness ... 16
7.2.6 Antistatic characteristics ... 16
7.2.7 Sound emission ... 16
7.2.8 Control classifications ... 17
7.2.9 Fail close conditions ... 18
7.2.10 Fail open conditions ... 18
7.2.11 Closing force for monitor at full open position ... 18
7.2.12 Gas pressure regulator sizing ... 18

AVA Documents
Document Sharing Hub

© ISO 2022 – All rights reserved

Full document details: BS ISO 23555-2:2022

7.3 Tests ... 22
7.3.1 General ... 22
7.3.2 Materials check at stable production phase ... 22
7.3.3 Dimensional check and visual inspection ... 22
7.3.4 Mounting position ... 22
7.3.5 Shell strength ... 22
7.3.6 External tightness ... 22
7.3.7 Internal tightness ... 23
7.3.8 Antistatic characteristics ... 23
7.3.9 Methods for calculating and measuring the sound pressure level ... 23
7.3.10 Control classifications ... 23
7.3.11 Final visual inspections ... 32
7.3.12 Verification of closing force for monitor in fully open position under normal operating conditions ... 33

8 Documentation ... 33
8.1 General ... 33
8.2 Documentation related to type test ... 33
8.3 Documentation related to batch surveillance ... 33
8.4 Documentation related to the routine tests ... 33
8.4.1 Documentation provided at the request of the customer ... 33
8.4.2 Documentation provided with the regulator ... 33

9 Marking ... 33
9.1 General ... 33
9.2 Basic requirements ... 34
9.3 Markings for the various connections ... 34
9.4 Marking of integrated safety devices ... 34
9.5 Other additional requirements ... 34

10 Packaging and transportation of finished product ... 34

Annex A (normative) **List of materials ... 35**

Annex B (normative) **Elastomeric material ... 36**

Annex C (normative) **High pressure vent limiter ... 37**

Annex D (normative) **Compliance evaluation ... 38**

Annex E (informative) **Alternative methods for the determination of the accuracy class, the lock-up pressure class, the maximum accuracy flow rate, the flow coefficients and the verification of the hysteresis band ... 39**

Annex F (informative) **Inspection certificate ... 47**

Annex G (informative) **Acceptance test ... 50**

Annex H (normative) **Token (creep) relief device ... 51**

Annex I (informative) **Order specification ... 53**

Annex J (informative) **Dynamic force calculation method ... 55**

Bibliography ... 58

© ISO 2022 – All rights reserved
Documents
Document Sharing Hub
Full document details: BS ISO 23555-2:2022

Foreword

ISO (the International Organization for Standardization) is a worldwide federation of national standards bodies (ISO member bodies). The work of preparing International Standards is normally carried out through ISO technical committees. Each member body interested in a subject for which a technical committee has been established has the right to be represented on that committee. International organizations, governmental and non-governmental, in liaison with ISO, also take part in the work. ISO collaborates closely with the International Electrotechnical Commission (IEC) on all matters of electrotechnical standardization.

The procedures used to develop this document and those intended for its further maintenance are described in the ISO/IEC Directives, Part 1. In particular, the different approval criteria needed for the different types of ISO documents should be noted. This document was drafted in accordance with the editorial rules of the ISO/IEC Directives, Part 2 (see www.iso.org/directives).

Attention is drawn to the possibility that some of the elements of this document may be the subject of patent rights. ISO shall not be held responsible for identifying any or all such patent rights. Details of any patent rights identified during the development of the document will be in the Introduction and/or on the ISO list of patent declarations received (see www.iso.org/patents).

Any trade name used in this document is information given for the convenience of users and does not constitute an endorsement.

For an explanation of the voluntary nature of standards, the meaning of ISO specific terms and expressions related to conformity assessment, as well as information about ISO's adherence to the World Trade Organization (WTO) principles in the Technical Barriers to Trade (TBT), see www.iso.org/iso/foreword.html.

This document was prepared by Technical Committee ISO/TC 161, *Controls and protective devices for gas and/or oil*.

A list of all parts in the ISO 23555 series can be found on the ISO website.

Any feedback or questions on this document should be directed to the user's national standards body. A complete listing of these bodies can be found at www.iso.org/members.html.

© ISO 2022 – All rights reserved

Documents
Document Sharing Hub
Full document details: BS ISO 23555-2:2022

Introduction

This document is designed to be used in combination with ISO 23555-1. This document together with ISO 23555-1 establishes the complete standard as it applies to the specific control covered by the ISO 23555 series.

Where needed, this document adapts ISO 23555-1 by stating in the corresponding clause:

— “with the following modification”;

— “with the following addition”;

— “is replaced by the following”; or

— “is not applicable”.

In order to identify specific requirements that are particular to this document but not already covered by ISO 23555-1, this document can contain clauses or subclauses that are additional to the structure of ISO 23555-1. These subclauses are indicated by the introductory sentence: “Subclause (or Annex) specific to this document.”.

© ISO 2022 – All rights reserved
Documents
Document Sharing Hub
Full document details: BS ISO 23555-2:2022

Gas pressure safety and control devices for use in gas transmission, distribution and installations for inlet pressures up to and including 10 MPa —

Part 2:
Gas pressure regulator

1 Scope

This document specifies safety, constructional, performance, testing and documentation requirements for gas pressure regulators for use in gas transmission and distribution installations (hereafter referred to as regulators).

This document is applicable to regulators with operating pressures greater than 500 kPa and up to and including 10 MPa (100 bar) and nominal diameters up to DN 400 for use with fuel gases as natural gas, manufactured gas, biomethane or liquefied petroleum gas (LPG).

This document is applicable to:

— test methods which are intended for product type test, routine tests and product surveillance tests;

— regulators which use the pipeline gas as a source of control energy unassisted by any external power source;

— regulators integrating on the same body a second regulator, used as monitor, complying with the requirements in this document;

— regulators integrating a safety shut off device (SSD) according to ISO 23555-3;

— regulators incorporating a creep (venting) relief device and/or a vent limiter complying with the requirements in this document.

This document does not apply to:

— regulators upstream from/on/in domestic gas-consuming appliances which are installed downstream of domestic gas meters;

— regulators designed to be incorporated into pressure control systems used in service lines (pipework from the main pipework in a gas infrastructure to the point of delivery of the gas) with declared volumetric flow rate ≤ 200 m^3/h at normal conditions and declared inlet pressure ≤ 500 kPa (5 bar);

— industrial process control valves, such as IEC 60534 (all parts);

— regulators used in aggressive/sour gas environments (gas environments containing water and H2S are considered sour) or severely corrosive conditions;

— regulators in service conditions with renewables (e.g. H2NG with hydrogen more than 10 %) and/or waste gases (e.g. biogas etc.), if additional information is not provided (e. g. contaminant, liquid, etc.).

© ISO 2022 – All rights reserved

Documents
Document Sharing Hub
Full document details: BS ISO 23555-2:2022

2 Normative references

The following documents are referred to in the text in such a way that some or all of their content constitutes requirements of this document. For dated references, only the edition cited applies. For undated references, the latest edition of the referenced document (including any amendments) applies.

ISO 23555-1:2022, *Gas pressure safety and control devices for use in gas transmission, distribution and installations for inlet pressures up to and including 10 MPa — Part 1: General requirements*

IEC 60534-1:2005, *Industrial-process control valves — Part 1: Control valve terminology and general considerations*

IEC 60534-2-3, *Industrial-process control valves — Part 2-3: Flow capacity — Test procedures*

IEC 60534-4, *Industrial-process control valves — Part 4: Inspection and routine testing*

3 Terms and definitions and symbols

3.1 Terms and definitions

For the purposes of this document, the terms and definitions given in ISO 23555-1 and the following apply.

ISO and IEC maintain terminology databases for use in standardization at the following addresses:

— ISO Online browsing platform: available at https://www.iso.org/obp

— IEC Electropedia: available at https://www.electropedia.org/

3.1.1 General terms

3.1.1.1
gas pressure regulator
device whose function is to maintain the value of the *controlled variable* (3.1.3.1) within its tolerance field irrespective of disturbance variables

3.1.1.2
direct acting gas pressure regulator
regulator in which the net force required to move the control member is supplied directly by the controlled variable

Note 1 to entry: See example in Figure 1.

© ISO 2022 – All rights reserved
Documents
Document Sharing Hub
Full document details: BS ISO 23555-2:2022

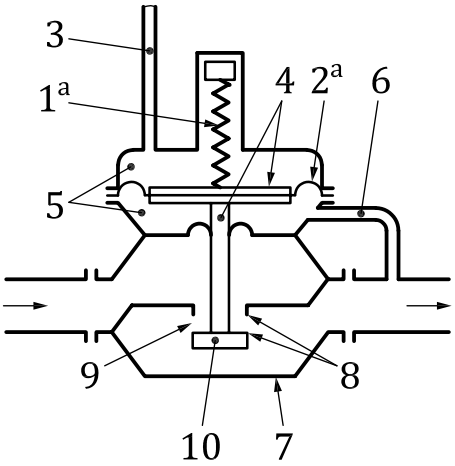

a) Direct acting regulator - type integral strength

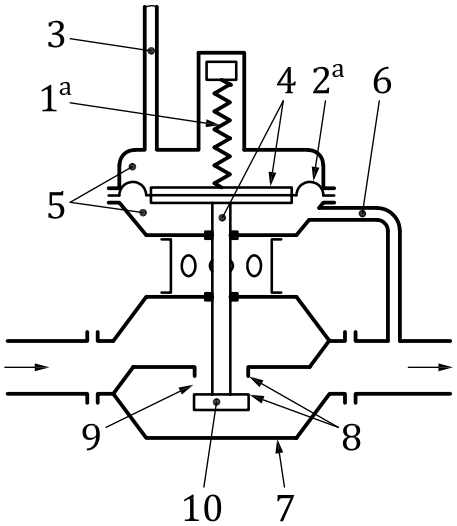

b) Direct acting regulator - type differential strength

Key

1 + 2 = Controller

1	setting element	6	sensing line
2	pressure detecting element	7	regulator body
3	breather/exhaust line	8	valve seats
4	actuator	9	seat ring
5	casing of actuator	10	control member

Figure 1 — Examples of a direct acting regulator

3.1.1.3
pilot-controlled gas pressure regulator
regulator in which the net force required to move the control member is supplied by a pilot

Note 1 to entry: See example in Figures 2 and 3.

© ISO 2022 – All rights reserved

Documents
Document Sharing Hub
Full document details: BS ISO 23555-2:2022

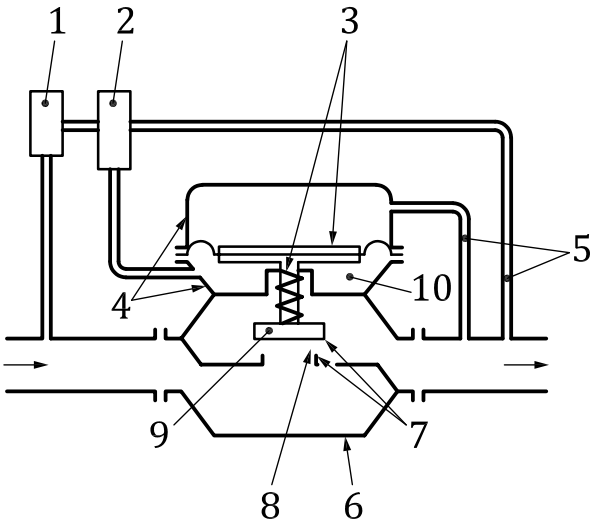

Key

1 auxiliary device
2 pilot
3 actuator
4 casing of actuator
5 sensing/process line
6 regulator body
7 valve seats
8 seat ring
9 control member
10 motorization chamber

Figure 2 — Example of a pilot-controlled regulator

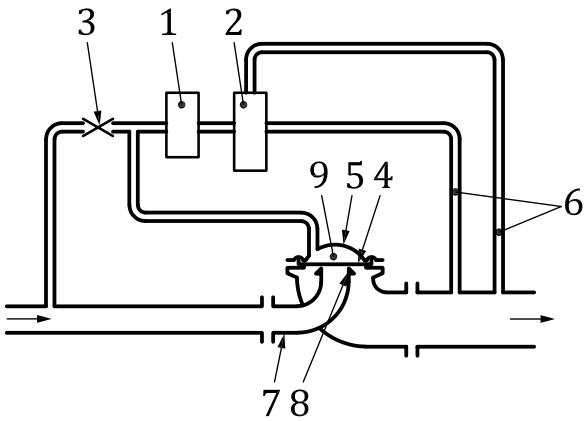

Key

1 auxiliary device
2 pilot
3 throttle
4 control member
5 casing of control member
6 sensing/process lines
7 regulator body
8 valve seat
9 motorization chamber

Figure 3 — Example of a pilot-controlled regulator with a diaphragm as control member

3.1.1.4
monitor
second regulator installed in series with an active regulator, normally upstream, which has the task of maintaining the controlled variable within allowable limits in the event of its value exceeds pre-established values (e.g. in the event of opening of the active regulator due to a failure, etc.)

© ISO 2022 – All rights reserved
Documents
Document Sharing Hub
Full document details: BS ISO 23555-2:2022

3.1.1.5
fail close regulator
regulator whose control member automatically tends to close or close when failures occur

Note 1 to entry: This definition is based on typical control failure modes.

3.1.1.6
fail open regulator
regulator whose control member automatically tends to open or open when failures occur

Note 1 to entry: This definition is based on typical control failure modes.

3.1.1.7
regulator size
nominal size DN of the inlet connection

Note 1 to entry: The preferred DN values are specified in ISO 6708.

3.1.1.8
series of regulators
regulators with the same design concept but differing only in size

3.1.2 Terms related to flow

3.1.2.1
flow coefficient in critical conditions
Cg
characteristic value for the flow capacity of regulator in critical conditions

Note 1 to entry: Flow coefficient Cg is a non-SI regulator coefficient.

Note 2 to entry: Numerically, Cg is represented as the number of normal cubic feet per hour of air flowing through a regulator in critical conditions with inlet absolute pressure 1 psia and with a reference inlet temperature t_{ur} = 15 °C[1]. The numerical value in SI units is equal to the number of m^3/h of air flowing through a regulator in critical conditions with inlet absolute pressure 243 kPa (2,43 bar) and inlet temperature of 15 °C.

Note 3 to entry: IEC 60534-2-1:2011, Clause 7 and Appendix B deals with this flow coefficient.

3.1.2.2
flow coefficient in normal conditions
KG
characteristic value for the flow capacity of a regulator in normal conditions

Note 1 to entry: The flow coefficient is equal to the volumetric flow rate at normal conditions through the regulator under the following reference conditions:

— reference natural gas at normal conditions with the relative density d_r = 0,64 (density ρ_r = 0,827 5 kg/m^3);

— fully opened control member (mechanical stop);

— reference inlet temperature of t_{ur} = 15 °C;

— reference absolute gas inlet pressure p_{ur} = 200 kPa (2 bar);

— reference absolute gas outlet pressure p_{dr} = 100 kPa (1 bar).

Note 2 to entry: The KG value is specified in $(m^3/h)/bar$.

1) The definition of this flow coefficient is based on IEC 60534-1.

© ISO 2022 – All rights reserved

Documents
Document Sharing Hub
Full document details: BS ISO 23555-2:2022

3.1.3 Terms related to variables in the controlling process

3.1.3.1
controlled variable
variable which is monitored by the controlling process

Note 1 to entry: In this document, only the outlet pressure, p_d, is considered as the controlled variable.

3.1.3.2
disturbance variable
variable acting from outside on the controlling process

Note 1 to entry: In the case of regulators with outlet pressure as the controlled variable, the disturbance variables are essentially:

— changes in the inlet pressure;

— changes in the volumetric flow rate.

3.1.3.3
reference inlet temperature
t_{ur}
temperature at the inlet of control in the assessment of its functional performance

Note 1 to entry: This document considers as reference temperature 15 °C.

Note 2 to entry: The use of reference inlet temperature is necessary to obtain homogeneous set of test results when comparing the functional performances of different type of control.

3.1.4 Terms related to the controlled process

3.1.4.1
set point
$\boldsymbol{p_{ds}}$
nominal value of the controlled variable under specified conditions

Note 1 to entry: The set point is not directly measurable but determined as shown in Figure 6.

3.1.4.2
set range
$\boldsymbol{W_d}$
whole range of set points which can be obtained from a regulator by adjustment and/or the replacement of some components (i.e. replacement of the valve seat or setting element, e.g. spring)

3.1.4.3
specific set range
$\boldsymbol{W_{ds}}$
whole range of set points which can be obtained from a regulator by adjustment and with no replacement of its components

3.1.4.4
regulation change
difference between the actual value of the controlled variable and the set point expressed as a percentage of the set point

3.1.5 Terms related to functional performance

3.1.5.1
stable
condition where the controlled variable settles to a stable value after a disturbance has occurred

© ISO 2022 – All rights reserved
Documents
Document Sharing Hub
Full document details: BS ISO 23555-2:2022

3.1.5.2
performance curve
graphic representation of the controlled variable as a function of the volumetric flow rate

Note 1 to entry: This curve is determined by increasing and then decreasing the volumetric flow rate with constant inlet pressure and set point (see Figure 4).

3.1.5.3
hysteresis band
difference between the two values of outlet pressure for a given volumetric flow rate

Note 1 to entry: See Figure 4.

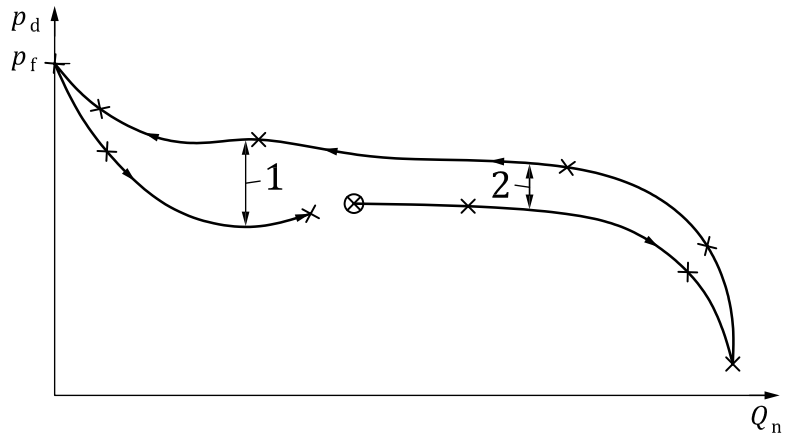

Key

⊗	start setting	1	max hysteresis band
×	measured values	2	hysteresis band

Figure 4 — Performance curve (p_{ds} constant, p_u constant)

3.1.5.4
family
<of performance curves> set of the performance curves for each value of inlet pressure determined for a given set point

Note 1 to entry: See Figure 5.

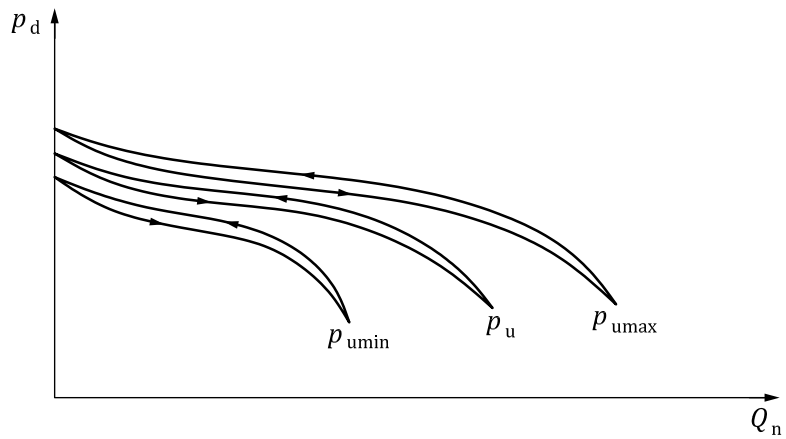

Figure 5 — Family of performance curves (p_{ds} constant)

© ISO 2022 – All rights reserved

Documents
Document Sharing Hub
Full document details: BS ISO 23555-2:2022

3.1.6 Feature related to accuracy

3.1.6.1
accuracy
maximum absolute value of regulation change under specified operating range

3.1.6.2
accuracy class
AC
maximum permissible value of the accuracy under specified operating range

3.1.6.3
inlet pressure range
b_{pu}
range of the inlet pressure for which the regulator ensures a given accuracy class

Note 1 to entry: The inlet pressure range is characterized by its limit values p_{umax} and p_{umin}.

3.1.6.4
maximum accuracy flow rate
lowest value of the maximum volumetric flow rate up to which, for a given set point and within the ambient temperature range specified, a given accuracy class is ensured:

— at the lowest inlet pressure (see Figure 6) $Q_{n,max,pumin}$;

— at the highest inlet pressure (see Figure 6) $Q_{n,max,pumax}$;

— at an intermediate inlet pressure between p_{umax} and p_{umin} (see Figure 6) $Q_{n,max,pu}$

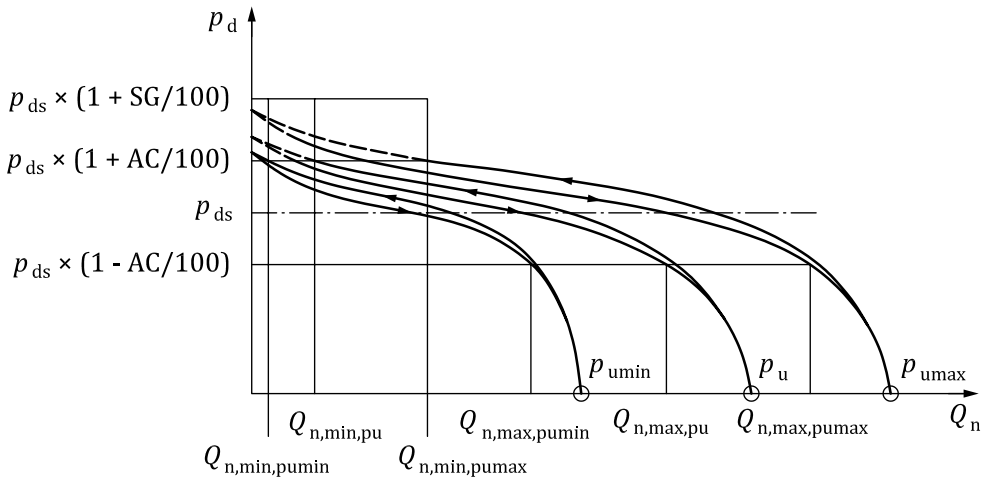

Figure 6 — Family of performance curves indicating maximum accuracy flow rates and minimum flow rates (p_{ds} constant, stable conditions)

3.1.7 Terms related to lock-up behaviour

3.1.7.1
lock-up time
t_f
time taken for the control member to move from an open position to the closed position

© ISO 2022 – All rights reserved
Documents
Document Sharing Hub
Full document details: BS ISO 23555-2:2022

3.1.7.2
lock-up pressure
p_f
pressure that occurs at the measuring point of the controlled variable when the control member is in the closed position

Note 1 to entry: The lock-up pressure corresponds to the outlet pressure at the volumetric flow rate $Q = 0$ in the performance curve (see Figure 4). It results when the time taken for a change in volumetric flow rate from Q to zero is greater than the lock- up time of the regulator.

3.1.7.3
lock-up pressure class
SG
maximum permissible positive difference between the actual lock-up pressure and the set point expressed as a percentage of the set point [see Formula (1)]:

$$SG = \frac{p_f - p_{ds}}{p_{ds}} \bullet 100 \quad (1)$$

Note 1 to entry: For better understanding of $(p_f - p_{ds})_{max}$, see Figure 6.

3.1.7.4
minimum flow rate
largest value of the minimum volumetric flow rate down to which, for a given set point and within the ambient temperature range specified, stable conditions are obtained:

— at the lowest inlet pressure (see Figure 6) $Q_{nmin,pumin}$;

— at the highest inlet pressure (see Figure 6) $Q_{nmin,pumax}$;

— at an intermediate inlet pressure between p_{umax} and p_{umin} (see Figure 6) $Q_{nmin,pu}$.

Note 1 to entry: Stable conditions are given in 7.2.8.3.

3.1.7.5
lock-up pressure zone
zone between the volumetric flow rate $Q_n = 0$ and the minimum flow rate $Q_{nmin,pu}$ for each corresponding inlet pressure and set point (see Figure 7)

3.1.7.6
class of lock-up pressure zone
SZ
maximum permissible lock-up pressure zone for specified:

— inlet pressure p_u ;

— set point p_{ds};

which is expressed as the percentage of $Q_{nmin,pu}$ to $Q_{nmax,pu}$ [see Formula (2)]:

$$SZ = \frac{Q_{nminpu}}{Q_{nmaxpu}} \bullet 100 \quad (2)$$

3.1.7.7
computational fluid dynamics
CFD
set of numerical methods and algorithms to solve and analyse problems that involve fluid flows

© ISO 2022 – All rights reserved

Documents
Document Sharing Hub
Full document details: BS ISO 23555-2:2022

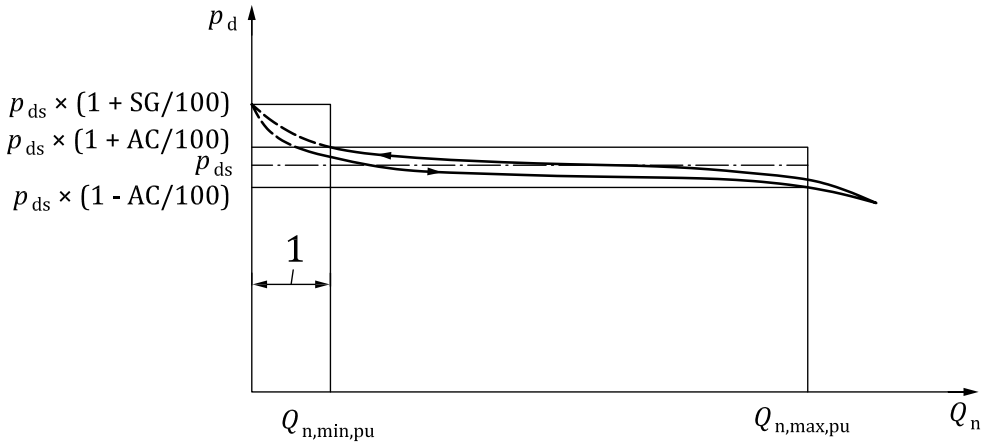

Key

1 lock-up pressure zone SZ

Figure 7 — Performance curve indicating lock-up pressure zone (stable condition)

3.1.8 Terms related to design and tests

3.1.8.1
closing force
F_S
force acting on control member of the monitor in full open position in normal operating conditions to bring it to its control position after activation of the monitor itself

3.1.9 Summary of symbols for creep relief valves

3.1.9.1
opening pressure
p_{do}
pressure at which the first internal leak occurs

3.1.9.2
closing pressure
p_{df}
falling pressure at which the relief valve is pressure tight after re-seating

3.2 Symbols

Shall be according to ISO 23555-1:2022, 3.2 with the following addition:

The following prospect summarizes the symbols and relevant descriptions and unit considered in this chapter and/or used in this document. The symbols are listed in alphabetic order.

Symbol	Term	Subclause	Unit
AC	Accuracy class	3.1.6.2	%
b_{pu}	Inlet pressure range	3.1.6.3	kPA
Cg	Flow coefficient in critical conditions	3.1.2.1	See definition
F_S	Closing force	3.1.8.1	N
KG	Flow coefficient in normal conditions	3.1.2.2	See definition
p_{df}	Closing pressure	3.1.9.2	kPA
p_{do}	Opening pressure	3.1.9.1	kPA

© ISO 2022 – All rights reserved
Documents
Document Sharing Hub
Full document details: BS ISO 23555-2:2022

Symbol	Term	Subclause	Unit
p_{dr}	Reference absolute outlet pressure	3.1.2.2	kPA abs
p_{ds}	Set point	3.1.4.1	kPA
p_f	Lock-up pressure	3.1.7.2	kPA
p_{ur}	Reference absolute inlet pressure	3.1.2.2	kPA abs
$Q_{nmin,pu}$	Minimum flow rate at inlet pressure p_u	3.1.7.4	m^3/h at normal conditions
$Q_{nmin,pumax}$	Minimum flow rate at inlet pressure p_{umax}		m^3/h at normal conditions
$Q_{nmin,pumin}$	Minimum flow rate at inlet pressure p_{umin}		m^3/h at normal conditions
SG	Lock-up pressure class	3.1.7.3	%
SZ	Class of lock-up pressure zone	3.1.7.6	%
t_f	Lock-up time	3.1.7.1	s
t_{ur}	Reference inlet temperature for KG	3.1.2.1	°C
W_d	Set range	3.1.4.2	kPA
W_{ds}	Specific set range	3.1.4.3	kPA

4 Classification

4.1 General

Shall be according to ISO 23555-1:2022, 4.1 with the following addition.

— Fail condition.

4.2 Temperature classes

Shall be according to ISO 23555-1:2022, 4.2.

4.3 Strength types

Shall be according to ISO 23555-1:2022, 4.2.

4.4 Fail conditions

Subclause specific to this document.

This document considers the following fail conditions.

— Fail close condition: the control member shall tend to close or close.

— Fail open conditions: the control member shall tend to open or open.

5 Materials

Shall be according to ISO 23555-1:2022, Clause 5.

6 Design

6.1 General

Shall be according to ISO 23555-1:2022, 6.1.

© ISO 2022 – All rights reserved

Documents
Document Sharing Hub
Full document details: BS ISO 23555-2:2022

6.2 Strength of metallic body and its inner metallic partition walls

Shall be according to ISO 23555-1:2022, 6.2.

6.3 Other pressure metallic containing parts of integral and differential strength controls

Shall be according to ISO 23555-1:2022, 6.3.

6.4 Strength of parts transmitting actuating forces

Shall be according to ISO 23555-1:2022, 6.4.

6.5 Strength of diaphragms (elastomeric parts)

Shall be according to ISO 23555-1:2022, 6.5.

6.6 Welding

Shall be according to ISO 23555-1:2022, 6.6.

6.7 Main function of a regulator

6.7.1 General

Subclause specific to this document.

The main function of a regulator is to maintain the value of the controlled variable within its tolerance field irrespective of the disturbance variables.

Regulators shall not have any continuous discharge of gas into the atmosphere. However, temporary discharges from auxiliary devices can occur.

Regulators shall be so designed that the external tightness and internal sealing meet the requirements of 7.2.4 and 7.2.5. If in the event of failure of the regulator (e.g. failure of a diaphragm) leakage to atmosphere is possible, the breather shall be provided with a threaded connection of at least DN 10 to enable an exhaust line to be connected. This connection may be used for a specific device (e.g. a dumping device). For proper operation of the regulator, any exhaust line shall be designed in such a way to prevent the ingress of foreign materials.

Pressure bearing parts including measuring and test points, which may be dismantled for servicing, adjustment or conversion shall be made pressure tight by mechanical means (e.g. metal to metal joints, o-rings, gaskets, etc.). Jointing compounds, such as liquids and pastes, shall not be used.

Jointing compounds, however, may be used for permanent assemblies and shall remain effective under normal operating conditions.

Pressure bearing parts not intended to be dismantled during servicing, adjustment or conversion shall be sealed by means which show evidence of interference or tampering (e.g. lacquer).

When external protrusions or other external parts need special care to cover the hazards during transport and handling, the manual shall include the provisions to cover these risks.

The motorization energy in a pilot-controlled regulator shall be provided by the gas upstream of the regulator.

For regulators used as stand-by monitor, it shall be possible to check whether the control member is in fully open or in controlling position by a visual inspection.

© ISO 2022 – All rights reserved
Documents
Document Sharing Hub
Full document details: BS ISO 23555-2:2022

6.7.2 Gas pressure regulators with associated safety devices

6.7.2.1 Gas pressure regulators with integrated safety devices

Additional integrated (same body) safety devices, i.e. gas safety shut-off devices (SSD) and/or a monitor shall be functionally independent from the regulator.

This requirement is met if:

a) the function of the regulator is not affected in the event of the failure and/or loss of functionality of one or more of the following safety shut-off device/monitor components:

— closure / control member;

— seat ring;

— actuator;

— casing of actuator;

— controller;

— pilot (in case of pilot-controlled monitor type);

— sensing and process lines;

b) the function of the safety shut-off device/monitor is not affected in the event of the failure and/or loss of functionality of one or more of the following regulator components:

— control member;

— seat ring;

— actuator;

— casing of actuator;

— controller;

— pilot (in case of pilot-controlled regulator type);

— sensing and process lines.

When the regulator incorporates more than one safety devices (e.g. a monitor and an SSD or two SSDs), the functional independence shall be met by each device from the other ones in similar way as detailed in this subclause.

When the integrated safety device is a slam-shut device or a cut-off device or a monitor, the motorization energy for the regulator, when it is a pilot-controlled type, shall be provided by the gas downstream of the safety device.

6.7.2.2 Gas pressure regulators with in-line monitor

The system includes a regulator with the function of active regulator and a second (in series) regulator with the function of monitor. The monitor shall be installed normally upstream of the active regulator and both equipment shall control the pressure at the same location.

The associated in-line monitor shall be functionally independent from the active regulator.

© ISO 2022 – All rights reserved

Documents
Document Sharing Hub
Full document details: BS ISO 23555-2:2022