BS ISO 23555-3:2024

BSI Standards Publication

Gas pressure safety and control devices for use in gas transmission, distribution and installations for inlet pressures up to and including 10 MPa

Part 3: Safety shut-off devices

Documents
Document Sharing Hub

Full document details: BS ISO 23555-3:2024

National foreword

This British Standard is the UK implementation of ISO 23555-3:2024.

The UK participation in its preparation was entrusted to Technical Committee GSE/22, Safety and control devices for gas and oil burners and gas burning appliances.

A list of organizations represented on this committee can be obtained on request to its committee manager.

Contractual and legal considerations

This publication has been prepared in good faith, however no representation, warranty, assurance or undertaking (express or implied) is or will be made, and no responsibility or liability is or will be accepted by BSI in relation to the adequacy, accuracy, completeness or reasonableness of this publication. All and any such responsibility and liability is expressly disclaimed to the full extent permitted by the law.

This publication is provided as is, and is to be used at the recipient's own risk.

The recipient is advised to consider seeking professional guidance with respect to its use of this publication.

This publication is not intended to constitute a contract. Users are responsible for its correct application.

© The British Standards Institution 2024
Published by BSI Standards Limited 2024

ISBN 978 0 539 20084 3

ICS 23.060.40; 91.140.40

Compliance with a British Standard cannot confer immunity from legal obligations.

This British Standard was published under the authority of the Standards Policy and Strategy Committee on 31 August 2024.

Amendments/corrigenda issued since publication

Date	Text affected

Documents
Document Sharing Hub

Full document details: BS ISO 23555-3:2024

International Standard

ISO 23555-3

First edition
2024-06

Gas pressure safety and control devices for use in gas transmission, distribution and installations for inlet pressures up to and including 10 MPa —

Part 3:
Safety shut-off devices

Dispositifs de commande et de sécurité de la pression de gaz destinés à être utilisés dans les installations de transport, de distribution et de stockage de gaz pour des pressions en entrée jusqu'à 10 MPa inclus —

Partie 3: Dispositifs d'arrêt de sécurité

Reference number
ISO 23555-3:2024(en)

© ISO 2024

Documents
Document Sharing Hub

Full document details: BS ISO 23555-3:2024

COPYRIGHT PROTECTED DOCUMENT

© ISO 2024

All rights reserved. Unless otherwise specified, or required in the context of its implementation, no part of this publication may be reproduced or utilized otherwise in any form or by any means, electronic or mechanical, including photocopying, or posting on the internet or an intranet, without prior written permission. Permission can be requested from either ISO at the address below or ISO's member body in the country of the requester.

ISO copyright office
CP 401 • Ch. de Blandonnet 8
CH-1214 Vernier, Geneva
Phone: +41 22 749 01 11
Email: copyright@iso.org
Website: www.iso.org

Published in Switzerland

Documents
Document Sharing Hub
Full document details: BS ISO 23555-3:2024

Contents

Page

Foreword ... **vi**
Introduction ... **vii**
1 Scope ... **1**
2 Normative references ... **2**
3 Terms, definitions and symbols ... **2**
3.1 Terms and definitions ... 2
3.1.1 Terms related to safety shut-off devices in general ... 2
3.1.2 Terms related to components of safety shut-off devices ... 3
3.1.3 Terms related to variables in the controlling process ... 7
3.1.4 Terms related to the controlled process and to the set value of the trip pressure ... 8
3.1.5 Terms related to functional performances ... 8
3.1.6 Terms related to the design and tests ... 10
3.2 Symbols, abbreviated terms and units ... 10
4 Classification ... **10**
4.1 General ... 10
4.2 Temperature classes ... 11
4.3 Strength types ... 11
4.4 Fail conditions ... 11
5 Materials ... **11**
6 Design ... **11**
6.1 General ... 11
6.2 Strength of metallic body and its inner metallic partition walls ... 11
6.3 Other pressure-containing metallic parts of integral and differential strength SSDs ... 11
6.4 Strength of parts transmitting actuating forces ... 11
6.5 Strength of diaphragms (elastomeric parts) ... 12
6.5.1 General ... 12
6.5.2 Diaphragms of gas safety shut-off devices (Functional class A) ... 12
6.5.3 Diaphragms of gas safety shut-off devices (Functional class B) ... 12
6.6 Welding ... 12
6.7 Main function of a safety shut-off device ... 12
6.7.1 General ... 12
6.7.2 Basic requirements for SSDs ... 12
6.7.3 Stand-alone gas safety shut-off devices ... 13
6.7.4 Safety shut-off devices integrated into a gas pressure regulator ... 13
6.7.5 Safety shut-off devices with an in-line gas pressure regulator ... 14
6.7.6 Safety shut-off device plus a second safety shut-off device. ... 14
6.7.7 Set range ... 14
6.7.8 External visual indication of the position of the closing member ... 14
6.7.9 Shutting-off and opening ... 14
6.7.10 By-pass ... 15
7 Performance requirements and testing ... **15**
7.1 General ... 15
7.1.1 Approach to stable product phase ... 15
7.1.2 Test conditions ... 15
7.1.3 Test tolerances ... 15
7.1.4 Overview table ... 15
7.2 Requirements ... 17
7.2.1 Test rig ... 17
7.2.2 Classification of tests ... 18
7.2.3 Dimensional check and visual inspection ... 19
7.2.4 Shell strength ... 19
7.2.5 External/Internal tightness ... 19

© ISO 2024 – All rights reserved

Documents
Document Sharing Hub
Full document details: BS ISO 23555-3:2024

7.2.6 Antistatic characteristics 20
7.2.7 Sound emission 20
7.2.8 Resistance of external surfaces to corrosion 20
7.2.9 Failure modes 20
7.2.10 Safety shut-off sizing 21
7.2.11 Accuracy group 21
7.2.12 Response time 21
7.2.13 Relatching difference and unlatching 21
7.2.14 Closing force 22
7.2.15 Endurance and accelerated ageing 22
7.2.16 Strength of the trip mechanism, valve seat and closing member against the dynamic impact of flowing gas 22
7.2.17 Flow coefficient 22
7.2.18 SSDS with incorporated vent limiters 23
7.2.19 Ice formation 23
7.3 Tests 23
7.3.1 Materials check at stable production phase 23
7.3.2 Dimensional check and visual inspection 23
7.3.3 Mounting position 23
7.3.4 Shell strength 23
7.3.5 External tightness test 23
7.3.6 Internal tightness test 24
7.3.7 Antistatic characteristics 24
7.3.8 Methods for calculating and measuring the sound pressure level 24
7.3.9 Accuracy group tests 24
7.3.10 Determination of flow coefficients 26
7.3.11 Response time 27
7.3.12 Relatching difference and unlatching 28
7.3.13 Verification of closing force 29
7.3.14 Endurance and accelerated ageing 30
7.3.15 Method for testing of resistance of external surfaces to corrosion 30
7.3.16 Resistance to gas of non-metallic parts 30
7.3.17 Verification of the strength of the trip mechanism, valve seat and closing member against dynamic impact of flowing gas 30

8 Documentation 31
8.1 General 31
8.2 Documentation related to type test 32
8.3 Documentation related to batch surveillance 32
8.4 Documentation related to the routine tests 32
8.4.1 Documentation provided at the request of the customer 32
8.4.2 Documentation provided with the safety shut-off device 32

9 Marking 32
9.1 General 32
9.2 Basic requirements 32
9.3 Marking of various connections 33
9.4 Marking of integrated gas pressure regulators 33
9.5 Other additional requirements 33

10 Packaging and transportation of finished product 33

Annex A (informative) **List of material 34**

Annex B (normative) **Elastomeric material 35**

Annex C (normative) **Vent limiter 36**

Annex D (normative) **Compliance evaluation 37**

Annex E (informative) **Inspection certificate 38**

Annex F (informative) **Ice formation 40**

© ISO 2024 – All rights reserved

Documents
Document Sharing Hub
Full document details: BS ISO 23555-3:2024

Annex G (informative) **Pressure drop** 41

Annex H (informative) **Alternative test method for verification of the strength of the trip mechanism, valve seat and closing member** 42

Annex I (informative) **Sizing equation** 45

Annex J (informative) **Order specification** 46

Annex K (informative) **Acceptance test** 48

Annex L (informative) **Suitability of safety shut-off device for damp operating conditions — Test procedure, requirement and acceptance criteria** 49

Bibliography 50

© ISO 2024 – All rights reserved

Documents
Document Sharing Hub

Full document details: BS ISO 23555-3:2024

Foreword

ISO (the International Organization for Standardization) is a worldwide federation of national standards bodies (ISO member bodies). The work of preparing International Standards is normally carried out through ISO technical committees. Each member body interested in a subject for which a technical committee has been established has the right to be represented on that committee. International organizations, governmental and non-governmental, in liaison with ISO, also take part in the work. ISO collaborates closely with the International Electrotechnical Commission (IEC) on all matters of electrotechnical standardization.

The procedures used to develop this document and those intended for its further maintenance are described in the ISO/IEC Directives, Part 1. In particular, the different approval criteria needed for the different types of ISO document should be noted. This document was drafted in accordance with the editorial rules of the ISO/IEC Directives, Part 2 (see www.iso.org/directives).

ISO draws attention to the possibility that the implementation of this document may involve the use of (a) patent(s). ISO takes no position concerning the evidence, validity or applicability of any claimed patent rights in respect thereof. As of the date of publication of this document, ISO had not received notice of (a) patent(s) which may be required to implement this document. However, implementers are cautioned that this may not represent the latest information, which may be obtained from the patent database available at www.iso.org/patents. ISO shall not be held responsible for identifying any or all such patent rights.

Any trade name used in this document is information given for the convenience of users and does not constitute an endorsement.

For an explanation of the voluntary nature of standards, the meaning of ISO specific terms and expressions related to conformity assessment, as well as information about ISO's adherence to the World Trade Organization (WTO) principles in the Technical Barriers to Trade (TBT), see www.iso.org/iso/foreword.html.

This document was prepared by Technical Committee ISO/TC 161, *Controls and protective devices for gaseous and liquid fuels*.

A list of all parts in the ISO 23555 series can be found on the ISO website.

Any feedback or questions on this document should be directed to the user's national standards body. A complete listing of these bodies can be found at www.iso.org/members.html.

© ISO 2024 – All rights reserved

Documents
Document Sharing Hub
Full document details: BS ISO 23555-3:2024

Introduction

This document is designed to be used in combination with ISO 23555-1 and it applies to the specific control covered by this document.

Where necessary, this document builds on the provisions of ISO 23555-1 by stating in the corresponding clause:

— “with the following modification”;

— “with the following addition”;

— “is replaced by the following”; or

— “is not applicable”.

In order to identify requirements that are specific to this document and that are not already covered by ISO 23555-1, this document contains certain clauses or subclauses that are additional to the structure of ISO 23555-1. These subclauses are indicated by the introductory sentence: “Subclause (or Annex) specific to this document.”.

To ensure the global relevance of this document, the differing requirements resulting from practical experience and installation practices in various regions of the world have been taken into account.

This document is intended to provide a basic framework of requirements.

© ISO 2024 – All rights reserved

Documents
Document Sharing Hub
Full document details: BS ISO 23555-3:2024

Documents
Document Sharing Hub

Gas pressure safety and control devices for use in gas transmission, distribution and installations for inlet pressures up to and including 10 MPa —

Part 3: Safety shut-off devices

1 Scope

This document specifies safety, constructional, performance, testing and documentation requirements of gas safety shut-off devices (SSDs).

This document is applicable to SSDs with operating pressures greater than 500 kPa (5 bar[1)]) up to 10 MPa (100 bar) of nominal connection sizes up to and including DN 400 for use with fuel gases such as natural gas, manufactured gas, biomethane or liquefied petroleum gas (LPG) in commercial industrial installations, including fuel gas infrastructures.

This document is applicable to SSDs for an operating temperature range from −20 °C to +60 °C;

This document is applicable to:

— test methods which are intended for product type tests, routine tests and batch surveillance tests;

— SSDs which use the pipeline gas as a source of control energy unassisted by any external power source;

— SSDs integrating on the same body a second SSD, conforming to the requirements in this document;

— SSDs integrating a gas pressure regulator conforming to ISO 23555-2;

— SSDs incorporating a creep (venting) relief device and/or a vent limiter conforming to the requirements in this document;

This document does not apply to:

— SSDs upstream from/on/in domestic gas-consuming appliances which are installed downstream of domestic gas meters;

— SSDs designed to be incorporated into pressure control systems used in service lines (pipework from the main pipework in a gas infrastructure to the point of delivery of the gas) with declared volumetric flow rate ≤ 200 m^3/h (n);

— industrial process control valves on/off type (see IEC 60534 for information on the design, classification and tests for this type of valve);

NOTE Such valves cannot be declared conformant to this document.

— SSDs used in sour gas environments (gas environments containing water and H_2S are considered sour) or corrosive conditions;

— SSDs in service conditions with waste gases (e.g. biogas etc.), if additional information is not provided (e.g. contaminant, liquid etc.).

1) 1 bar = 0,1 MPa = 10^5 Pa; 1 MPa = 1 N/mm^2.

© ISO 2024 – All rights reserved

Documents
Document Sharing Hub
Full document details: BS ISO 23555-3:2024

2 Normative references

The following documents are referred to in the text in such a way that some or all of their content constitutes requirements of this document. For dated references, only the edition cited applies. For undated references, the latest edition of the referenced document (including any amendments) applies.

ISO 23555-1,, *Gas pressure safety and control devices for use in gas transmission, distribution and installations for inlet pressures up to and including 10 MPa — Part 1: General requirements*

IEC 60534-2-3, *Industrial-process control valves – Part 2-3: Flow capacity – Test procedures*

IEC 60534-4:2006, *Industrial-process control valves - Part 4: Inspection and routine testing*

3 Terms, definitions and symbols

For the purposes of this document, the terms and definitions given in ISO 23555-1 and the following apply.

ISO and IEC maintain terminology databases for use in standardization at the following addresses:

— ISO Online browsing platform: available at https://www.iso.org/obp

— IEC Electropedia: available at https://www.electropedia.org/

3.1 Terms and definitions

3.1.1 Terms related to safety shut-off devices in general

3.1.1.1
gas safety shut-off device
device whose function is to stay in the open position under normal operating conditions and to shut-off the gas flow automatically and completely when the monitored pressure exceeds the pre-set values (over-pressure monitoring and/or under-pressure monitoring)

3.1.1.2
direct acting gas safety shut-off device
safety shut-off device (SSD) in which the pressure-detecting element is directly connected to the trip mechanism

Note 1 to entry: See Figure 1.

3.1.1.3
indirect acting gas safety shut-off device
safety shut-off device (SSD) without mechanical connection between the pressure detecting element and the trip mechanism and where (pressure) energy from an internal or external source is used for activating the trip mechanism and moving the closing element

Note 1 to entry: See Figures 2, 3 and 4.

3.1.1.4
gas cut-off device
safety shut-off device (SSD) designed to shut off the gas flow, which responds dynamically slower than a slam shut device when the monitored pressure exceeds the pre-set values

3.1.1.5
gas slam shut device
safety shut-off device (SSD) designed to quickly shut off the gas flow when the monitored pressure exceeds the pre-set values

EXAMPLE Spring or weight-loaded SSD.

© ISO 2024 – All rights reserved

Documents
Document Sharing Hub
Full document details: BS ISO 23555-3:2024

3.1.1.6
auxiliary pressure source
energy coming from pressure of the system (internal energy) or from any external source (compressed air or gas)

3.1.2 Terms related to components of safety shut-off devices

3.1.2.1
closing member
part which shuts off the gas flow completely

3.1.2.2
trip mechanism
mechanism which releases the closing member when activated by the controller

3.1.2.3
actuator
device activated by the trip mechanism which shuts the closing member

3.1.2.4
relatching device
device which enables the complete opening of the safety shut-off device (SSD)

3.1.2.5
controller
device which includes:

— a setting element to adjust the set value of the trip pressure;

— a pressure-detecting element which has the function to detect the feedback of the monitored pressure (e.g. a diaphragm);

— a unit which compares the set value of the trip pressure with the monitored pressure;

— a system which gives the energy to operate the trip mechanism

3.1.2.6
bypass
device permitting manual equalization of pressure across a closed safety shut-off device (SSD)

Note 1 to entry: See examples in Figure 1 to Figure 4.

© ISO 2024 – All rights reserved

Documents
Document Sharing Hub
Full document details: BS ISO 23555-3:2024

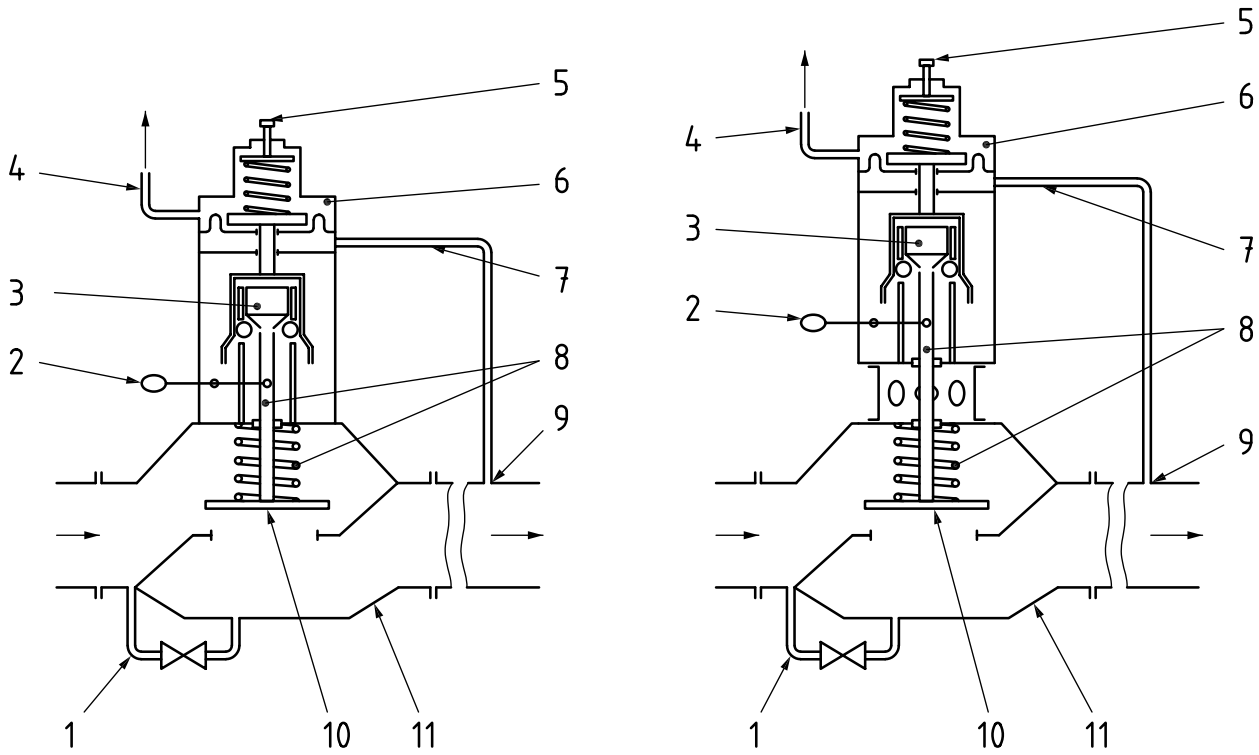

a) Pressure-containing parts group 2 (ISO 23555-1:2022, 6.3.2)

b) Pressure-containing parts group 3 (ISO 23555-1:2022, 6.3.2)

Key

1 bypass
2 relatching device
3 trip mechanism
4 breather line
5 setting element
6 controller
7 sensing line
8 actuator
9 sensing point at the location to be monitored
10 closing member
11 SSD body

Figure 1 — Example of direct acting gas safety shut-off devices

© ISO 2024 – All rights reserved

Documents
Document Sharing Hub
Full document details: BS ISO 23555-3:2024

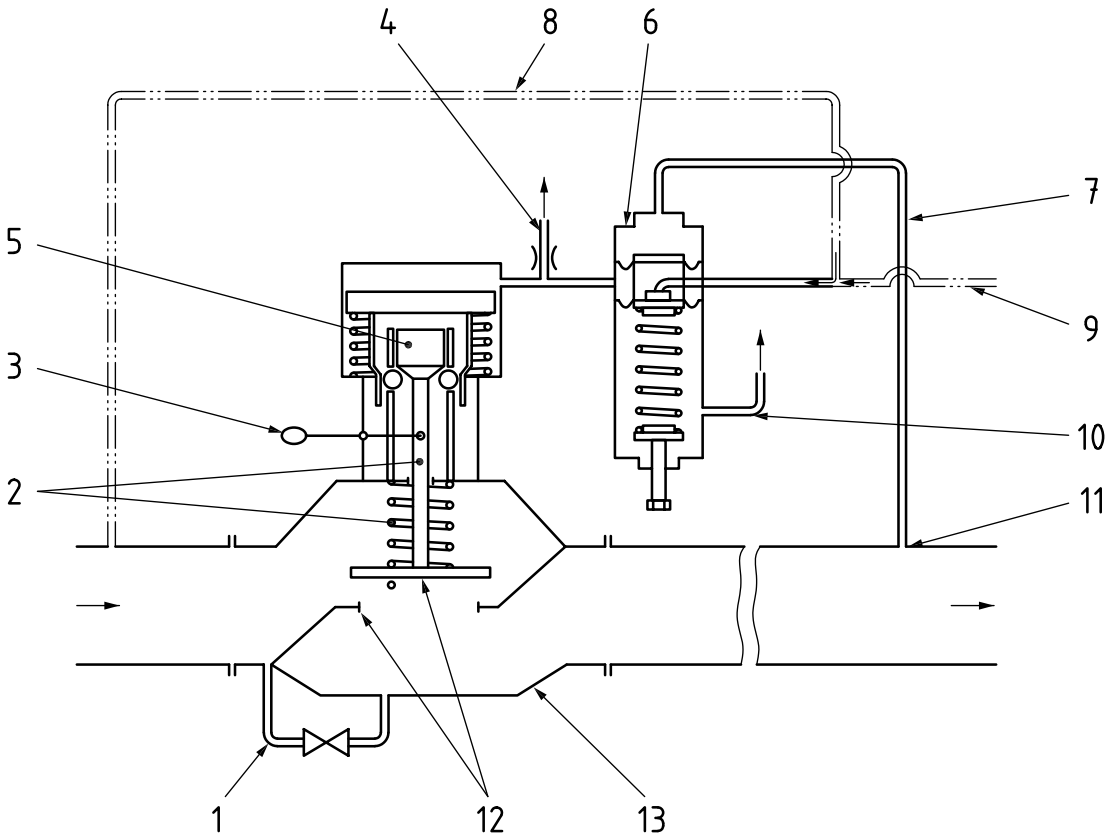

Key

1 bypass
2 actuator
3 relatching device
4 exhaust line
5 trip mechanism
6 controller
7 sensing line
8 loading pressure line (from internal auxiliary pressure source)
9 loading pressure line (from external auxiliary pressure source)
10 breather/exhaust line
11 sensing point
12 closing member
13 SSD body

Figure 2 — Example No. 1 of an indirect acting gas safety shut-off device

© ISO 2024 – All rights reserved

Documents
Document Sharing Hub
Full document details: BS ISO 23555-3:2024

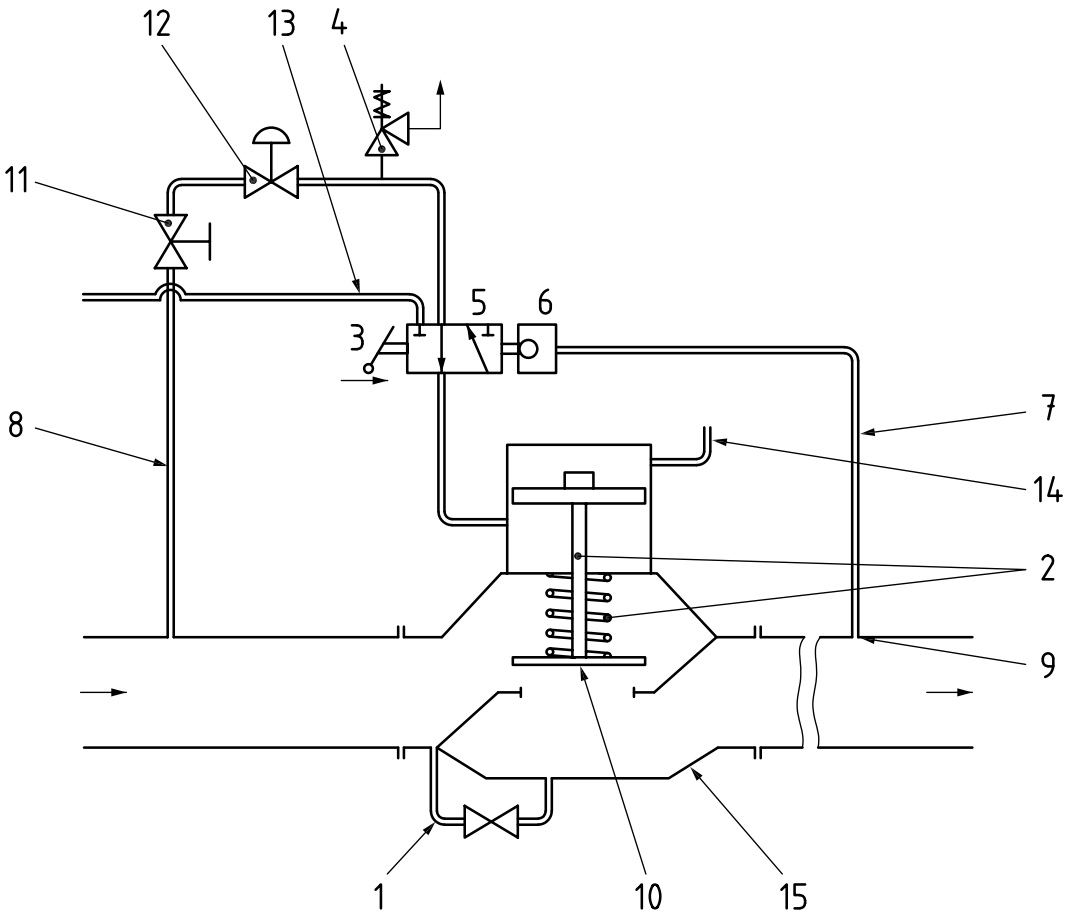

Key

1 bypass
2 actuator
3 relatching device
4 safety relief valve
5 trip mechanism (directional control valve)
6 controller
7 sensing line
8 loading pressure line (from internal auxiliary pressure source)
9 sensing point
10 closing member
11 isolating valve
12 pressure regulator
13 exhaust line
14 breather line
15 SSD body

Figure 3 — Example No. 2 of an indirect acting gas safety shut-off device

© ISO 2024 – All rights reserved

Documents
Document Sharing Hub
Full document details: BS ISO 23555-3:2024

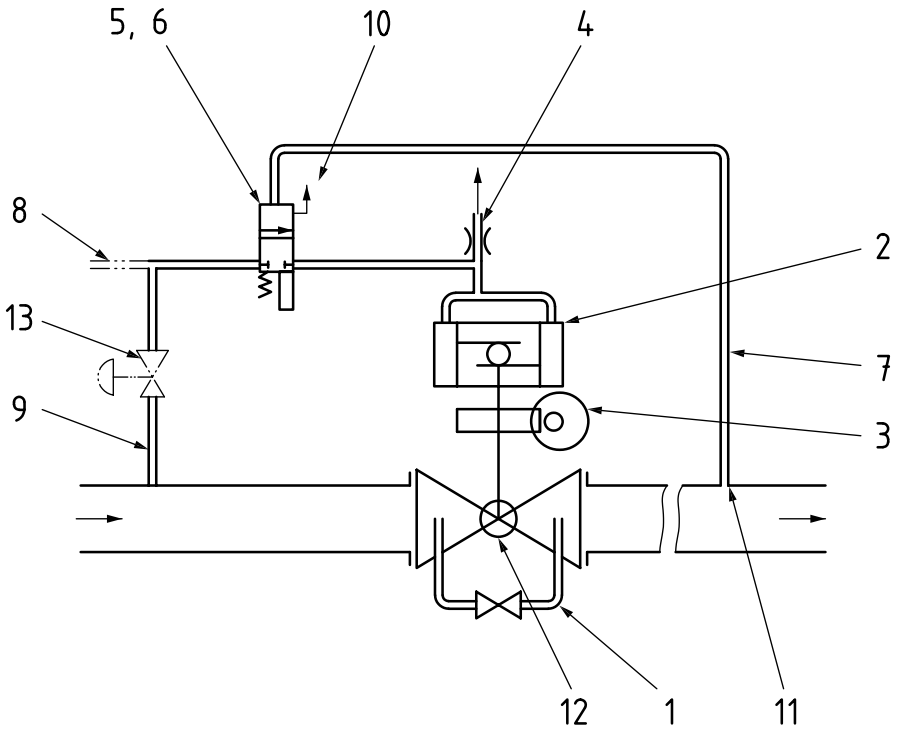

Key

1 bypass
2 actuator
3 relatching device
4 exhaust line
5 trip mechanism
6 controller
7 sensing line
8 loading pressure line (from external auxiliary pressure source)
9 loading pressure line (from internal auxiliary pressure source)
10 breather/exhaust line
11 sensing point
12 closing member
13 pressure reducer (if applicable)

Figure 4 — Example No. 3 of an indirect acting gas safety shut-off device

3.1.2.7
loading pressure line
line connecting the controller and/or actuator to the internal or external power source

3.1.3 Terms related to variables in the controlling process

3.1.3.1
monitored pressure
pressure monitored and safeguarded by the safety shut-off device (SSD), normally the outlet pressure of the pressure control station/installation

3.1.3.2
maximum value
highest value to which any variable can be adjusted or to which it is limited, or which any variable may reach during a series of measurements, or during a certain time period

Note 1 to entry: The maximum value is specified by the index "max" added to the symbol of the variable.

© ISO 2024 – All rights reserved

Documents
Document Sharing Hub
Full document details: BS ISO 23555-3:2024

3.1.3.3
minimum value
lowest value to which any variable can be adjusted or to which it is limited, or which any variable may reach during a series of measurements or during a certain time period

Note 1 to entry: The minimum value is specified by the index "min" added to the symbol of the variable.

3.1.4 Terms related to the controlled process and to the set value of the trip pressure

3.1.4.1
loading pressure
pressure of the gas from the upstream or downstream pipeline or of the air from an external source used as an energy source for the controller and/or actuator

3.1.4.2
trip pressure
pressure value at which the closing member reaches the closed position

Note 1 to entry: The trip pressure for over-pressure monitoring is represented using the symbol p_{do}.

Note 2 to entry: The trip pressure for under-pressure monitoring is represented using the symbol $p_{du.}$

3.1.4.3
actual value of the trip pressure
pressure value at which the closing member of a safety shut-off device (SSD) starts to move

Note 1 to entry: The actual value of the trip pressure for over-pressure monitoring is represented using the symbol p_{dio}.

Note 2 to entry: The actual value of the trip pressure for under-pressure monitoring is represented using the symbol p_{diu}.

3.1.4.4
set point
nominal trip pressure value under specified conditions

Note 1 to entry: The set point for over-pressure monitoring is represented using the symbol p_{dso}.

Note 2 to entry: The set point for under-pressure monitoring is represented using the symbol p_{dsu}.

3.1.4.5
set range
whole range of set points which can be obtained with a safety shut-off device (SSD) by adjustment and/or the replacement of some components (e.g. replacement of the setting mean, or pressure detecting element)

Note 1 to entry: The set range for over-pressure monitoring is represented using the symbol W_{do}.

Note 2 to entry: The set range for under-pressure monitoring is represented using the symbol W_{du}.

3.1.4.6
specific set range
whole range of set points which can be obtained with a safety shut-off device (SSD) by adjustment and without replacement of any component

Note 1 to entry: The specific set range for over-pressure monitoring is represented using the symbol W_{dso}.

Note 2 to entry: The specific set range for under-pressure monitoring is represented using the symbol W_{dsu}.

3.1.5 Terms related to functional performances

3.1.5.1
trip pressure deviation
difference between the actual value of the trip pressure and the set point as a percentage of the set value

Note 1 to entry: See Figure 5.

© ISO 2024 – All rights reserved

Documents
Document Sharing Hub
Full document details: BS ISO 23555-3:2024

3.1.5.2
accuracy group
AG
maximum permissible absolute value of trip pressure deviation

Note 1 to entry: See Figure 5.

3.1.5.3
inlet operating pressure range
b_{pu}
range of inlet operating pressure for which the safety shut-off device (SSD) ensures a given accuracy group

3.1.5.4
response time
t_a
time interval between attaining the permissible limit value of the trip pressure at the sensing point and complete closure of the closing member

3.1.5.5
relatching pressure difference
Δp_w
minimum difference between the set value of the trip pressure and the monitored pressure which is required for the correct resetting of the safety shut-off device (SSD)

Note 1 to entry: See Figure 5.

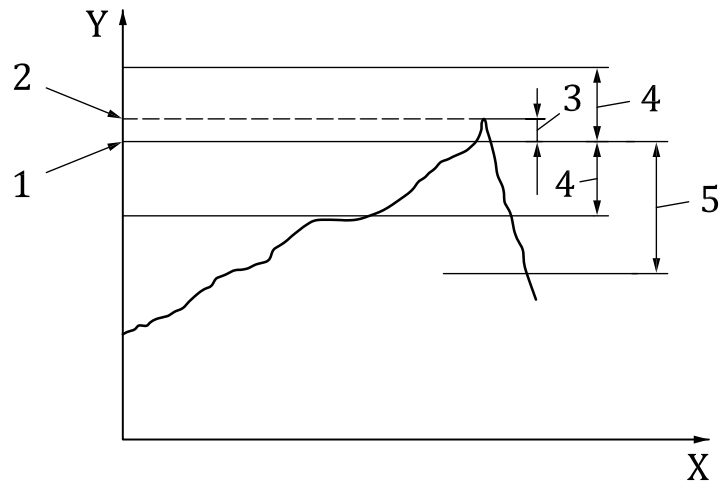

Key

X time, t
Y pressure, p_d
1 set value of trip pressure, p_{dso}
2 trip pressure, p_{do}
3 trip pressure deviation
4 accuracy group (AG)
5 relatching pressure difference, Δp_w

Figure 5 — Monitored pressure and trip pressure

3.1.5.6
pressure drop
drop in pressure, at specified operating conditions, of gas passing through the safety shut-off device (SSD)

© ISO 2024 – All rights reserved

Documents
Document Sharing Hub
Full document details: BS ISO 23555-3:2024