BS ISO 2407:2024

BSI Standards Publication

# Test conditions for internal cylindrical grinding machines with horizontal spindle — Testing of accuracy

Documents
Document Sharing Hub

Full document details: BS ISO 2407:2024

# National foreword

This British Standard is the UK implementation of ISO 2407:2024. It supersedes BS ISO 2407:1997+A1:2016, which is withdrawn.

The UK participation in its preparation was entrusted to Technical Committee MTE/1/2, Machine tools - Accuracy.

A list of organizations represented on this committee can be obtained on request to its committee manager.

**Contractual and legal considerations**

This publication has been prepared in good faith, however no representation, warranty, assurance or undertaking (express or implied) is or will be made, and no responsibility or liability is or will be accepted by BSI in relation to the adequacy, accuracy, completeness or reasonableness of this publication. All and any such responsibility and liability is expressly disclaimed to the full extent permitted by the law.

This publication is provided as is, and is to be used at the recipient's own risk.

The recipient is advised to consider seeking professional guidance with respect to its use of this publication.

This publication is not intended to constitute a contract. Users are responsible for its correct application.

© The British Standards Institution 2024
Published by BSI Standards Limited 2024

ISBN 978 0 539 18183 8

ICS 25.080.50

**Compliance with a British Standard cannot confer immunity from legal obligations.**

This British Standard was published under the authority of the Standards Policy and Strategy Committee on 31 August 2024.

**Amendments/corrigenda issued since publication**

| Date | Text affected |
|---|---|

Documents
Document Sharing Hub

Full document details: BS ISO 2407:2024

International Standard

# ISO 2407

Fourth edition
2024-08

# Test conditions for internal cylindrical grinding machines with horizontal spindle — Testing of accuracy

*Conditions d'essai des machines à rectifier les surfaces de révolution intérieures à broche horizontale — Contrôle de l'exactitude*

Reference number
ISO 2407:2024(en)

© ISO 2024

Documents
Document Sharing Hub

Full document details: BS ISO 2407:2024

**COPYRIGHT PROTECTED DOCUMENT**

© ISO 2024

All rights reserved. Unless otherwise specified, or required in the context of its implementation, no part of this publication may be reproduced or utilized otherwise in any form or by any means, electronic or mechanical, including photocopying, or posting on the internet or an intranet, without prior written permission. Permission can be requested from either ISO at the address below or ISO's member body in the country of the requester.

ISO copyright office
CP 401 • Ch. de Blandonnet 8
CH-1214 Vernier, Geneva
Phone: +41 22 749 01 11
Email: copyright@iso.org
Website: www.iso.org

Published in Switzerland



Documents
Document Sharing Hub
Full document details: BS ISO 2407:2024

# Contents

Page

**Foreword** ... **iv**

**1 Scope** ... **1**

**2 Normative references** ... **1**

**3 Terms and definitions** ... **1**

**4 Machine configurations** ... **1**

**5 Preliminary remarks** ... **3**
5.1 Measuring units ... 3
5.2 Reference to ISO 230-1, ISO 230-2 and ISO 230-7 ... 3
5.3 Machine levelling ... 3
5.4 Temperature conditions ... 3
5.5 Testing sequence ... 3
5.6 Tests to be performed ... 3
5.7 Measuring instruments ... 3
5.8 Software compensation ... 4
5.9 Machining tests ... 4
5.10 Minimum tolerance ... 4
5.11 Diagrams ... 4

**6 Geometric tests** ... **5**
6.1 Linear axes motions ... 5
6.2 Workholding spindle ... 7
6.3 Wheel spindle ... 11
6.4 Facing wheelhead ... 14

**7 Positioning tests** ... **18**

**8 Machining tests** ... **23**

**Annex A** (informative) **Error motions of axes of rotation** ... **25**

**Annex B** (informative) **Terms in other languages** ... **29**

**Bibliography** ... **30**

© ISO 2024 – All rights reserved



Documents
Document Sharing Hub

Full document details: BS ISO 2407:2024

# Foreword

ISO (the International Organization for Standardization) is a worldwide federation of national standards bodies (ISO member bodies). The work of preparing International Standards is normally carried out through ISO technical committees. Each member body interested in a subject for which a technical committee has been established has the right to be represented on that committee. International organizations, governmental and non-governmental, in liaison with ISO, also take part in the work. ISO collaborates closely with the International Electrotechnical Commission (IEC) on all matters of electrotechnical standardization.

The procedures used to develop this document and those intended for its further maintenance are described in the ISO/IEC Directives, Part 1. In particular, the different approval criteria needed for the different types of ISO document should be noted. This document was drafted in accordance with the editorial rules of the ISO/IEC Directives, Part 2 (see www.iso.org/directives).

ISO draws attention to the possibility that the implementation of this document may involve the use of (a) patent(s). ISO takes no position concerning the evidence, validity or applicability of any claimed patent rights in respect thereof. As of the date of publication of this document, ISO had not received notice of (a) patent(s) which may be required to implement this document. However, implementers are cautioned that this may not represent the latest information, which may be obtained from the patent database available at www.iso.org/patents. ISO shall not be held responsible for identifying any or all such patent rights.

Any trade name used in this document is information given for the convenience of users and does not constitute an endorsement.

For an explanation of the voluntary nature of standards, the meaning of ISO specific terms and expressions related to conformity assessment, as well as information about ISO's adherence to the World Trade Organization (WTO) principles in the Technical Barriers to Trade (TBT), see www.iso.org/iso/foreword.html.

This document was prepared by Technical Committee ISO/TC 39, *Machine tools*, Subcommittee SC 2, *Test conditions for metal cutting machine tools*.

This fourth edition cancels and replaces the third edition (ISO 2407:1997), which has been technically revised. It also incorporates the Amendment ISO 2407:1997/Amd 1:2016. The main changes are as follows:

— references to ISO 230 series have been updated;

— tests for optional B1-axis have been added;

— a new Annex A has been added.

Any feedback or questions on this document should be directed to the user's national standards body. A complete listing of these bodies can be found at www.iso.org/members.html.

© ISO 2024 – All rights reserved



Documents
Document Sharing Hub
Full document details: BS ISO 2407:2024

# Test conditions for internal cylindrical grinding machines with horizontal spindle — Testing of accuracy

## 1 Scope

This document specifies, with reference to ISO 230-1, ISO 230-2 and ISO 230-7, geometric tests, positioning tests and machining tests on general purpose and normal accuracy internal cylindrical grinding machines with horizontal spindle, whether they are or are not fitted with a facing wheelhead slide. This document also specifies the applicable tolerances corresponding to the above-mentioned tests.

This document deals only with the verification of the accuracy; it applies neither to the testing of the machine operation (vibrations, abnormal noise, stick-slip motion of components, etc.), nor to the checking of its characteristics (such as speeds, feeds), which are generally checked before the testing of the accuracy.

This document provides the terminology used for the principal components of the machine and the designation of the axes with reference to ISO 841.

## 2 Normative references

The following documents are referred to in the text in such a way that some or all of their content constitutes requirements of this document. For dated references, only the edition cited applies. For undated references, the latest edition of the referenced document (including any amendments) applies.

ISO 230-1:2012, *Test code for machine tools — Part 1: Geometric accuracy of machines operating under no-load or quasi-static conditions*

ISO 230-2:2014, *Test code for machine tools — Part 2: Determination of accuracy and repeatability of positioning of numerically controlled axes*

ISO 230-7:2015, *Test code for machine tools — Part 7: Geometric accuracy of axes of rotation*

## 3 Terms and definitions

For the purposes of this document, the terms and definitions given in ISO 230-1, ISO 230-2 and ISO 230-7 apply.

ISO and IEC maintain terminology databases for use in standardization at the following addresses:

— ISO Online browsing platform: available at https://www.iso.org/obp

— IEC Electropedia: available at https://www.electropedia.org/

## 4 Machine configurations

The common characteristic of all internal cylindrical grinding machines with horizontal spindle is that they have at least one horizontal workhead and one wheelhead on the bed and the spindles are facing each other. The workhead can swivel around a vertical axis (B'-axis) for grinding conical surfaces.

© ISO 2024 – All rights reserved

Documents
Document Sharing Hub
Full document details: BS ISO 2407:2024

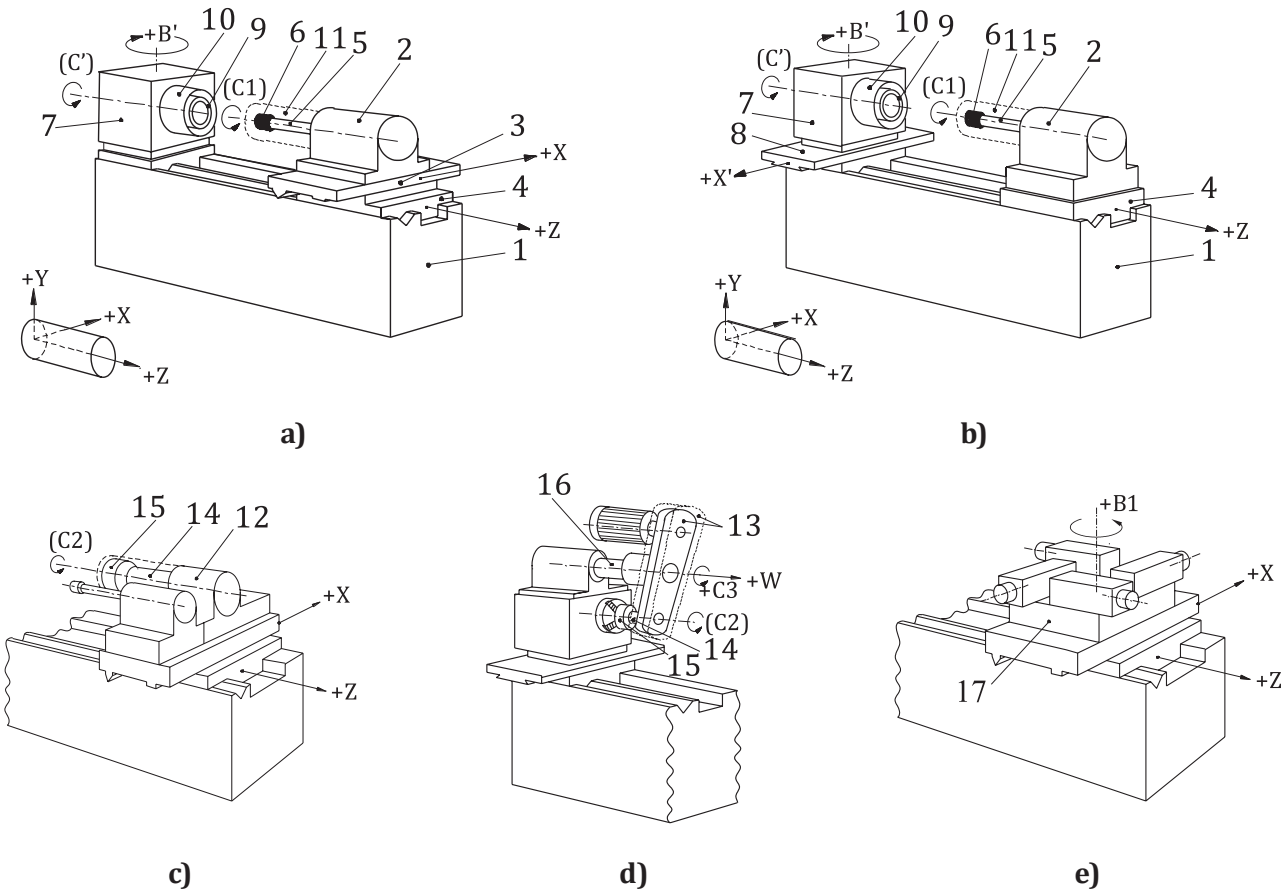


**Key**

1 bed
2 wheelhead
3 wheelhead cross slide (X-axis)
4 wheelhead carriage (Z-axis)
5 wheel spindle [(C1)-axis]
6 internal grinding wheel
7 workhead (swivelling) [including B'-axis and (C')-axis]
8 workhead cross slide (X'-axis)
9 workholding spindle
10 workpiece guard
11 wheel guard
12 facing wheelhead
13 swivel arm (with drive and guard) (C3-axis)
14 facing spindle [(C2)-axis]
15 facing wheel
16 facing wheel quill (W-axis)
17 B1-axis

**Figure 1 — Machine configurations**

Depending upon the machine design, one of the two heads (workhead or wheelhead) can move along the X-axis. The wheelhead usually can move along the Z-axis [see Figures 1 a) and b)].

In some cases, these machines are equipped with a facing wheel. This can be accomplished by means of the second wheelhead as shown in Figure 1 c) or by an additional swivelling wheelhead attachment. This attachment is usually mounted on the workhead with a linear motion (W-axis) parallel to Z-axis and a swivelling motion (C3-axis) around the W-axis [see Figure 1 d)].

In some cases, these machines are equipped with a B1-axis that is mounted on the wheelhead cross slide (X-axis) and allows a fast tool change (2 to 4 axes). In some machine tools, B1-axis is a contouring rotary axis [see Figure 1 e)].

© ISO 2024 – All rights reserved

Documents
Document Sharing Hub
Full document details: BS ISO 2407:2024

# 5 Preliminary remarks

## 5.1 Measuring units

In this document, all linear dimensions, deviations and corresponding tolerances are expressed in millimetres, angular dimensions are expressed in degrees, and angular deviations and the corresponding tolerances are expressed in ratios but in some cases microradians or arcseconds are used for clarification purposes. The equivalence of Formula (1) should always be kept in mind:

$$0{,}010/1\,000 = 10\ \mu\text{rad} \approx 2'' \quad (1)$$

## 5.2 Reference to ISO 230-1, ISO 230-2 and ISO 230-7

To apply this document, reference shall be made to ISO 230-1 when required, especially for the installation of the machine tool before testing, warming up of the spindle and other moving components, description of measuring methods and recommended accuracy of testing equipment.

In the "Observations" block of the tests described in Clauses 6 and 7, the instructions are followed by a reference to the corresponding clauses of ISO 230-1, ISO 230-2 or ISO 230-7, in cases where the test concerned complies with the specifications of that part of the ISO 230 series.

## 5.3 Machine levelling

Prior to conducting tests on a machine tool, the machine tool should be levelled according to the recommendations of the supplier/manufacturer (see ISO 230-1:2012, 6.1).

## 5.4 Temperature conditions

The temperature conditions throughout the tests shall be specified by agreement between the manufacturer/supplier and the user.

## 5.5 Testing sequence

The sequence in which the tests are presented in this document in no way defines the practical order of testing. In order to make the mounting of instruments or measuring easier, tests may be performed in any order.

## 5.6 Tests to be performed

When testing a machine, it is not always necessary or possible to carry out all the tests described in this document. When the tests are required for acceptance purposes, it is up to the user to choose, in agreement with the supplier/manufacturer, those tests relating to the components and/or the properties of the machine which are of interest. These tests shall be clearly stated when ordering a machine. Mere reference to this document for the acceptance tests, without specifying the tests to be carried out and without agreement on the relevant expenses, cannot be considered as binding for any contracting party.

## 5.7 Measuring instruments

Measuring instruments indicated in the tests described in Clauses 6 and 7 are examples only. Other instruments capable of measuring the same quantities and having the same, or a smaller, measurement uncertainty can be used. Reference shall be made to ISO 230-1:2012, Clause 5, which indicates the relationship between the measurement uncertainties and the tolerances.

When a "dial gauge" is referred to, it can mean not only dial test indicators (DTI), but any type of linear displacement sensor, such as analogue or digital dial gauges, linear variable differential transformer (LVDTs), linear scale displacement gauges, or non-contact sensors, when applicable to the test concerned.

Similarly, when a "straightedge" is referred to, it can mean any type of straightness reference artefact, such as a granite or ceramic or steel or cast-iron straightedge, one arm of a square, one generating line on a

© ISO 2024 – All rights reserved

Documents
Document Sharing Hub
Full document details: BS ISO 2407:2024

cylindrical square, any straight path on a reference cube, or a special, dedicated artefact manufactured to fit in the T-slots or other references.

In the same way, when a “square” is mentioned, it can mean any type of squareness reference artefact, such as a granite or ceramic or steel or cast-iron square, a cylindrical square, a reference cube, or, again, a special, dedicated artefact.

When a “precision level” is referred to, it can mean any type of level such as bubble tube, digital and analogue electronic levels.

Valuable information on measuring instruments is available in ISO/TR 230-11.

## 5.8 Software compensation

When built-in software facilities are available for compensating geometric, positioning, contouring and thermal deviations, their use during these tests should be based on agreement between the manufacturer/supplier and the user, with due consideration to the machine tool intended use, e.g. if the intended use of the machine tool is with or without software compensation for geometric errors. When the software compensation is used, this shall be stated in the test report. It shall be noted that when software compensation is used, some machine tool axes cannot be locked for test purposes.

Valuable information on numerical compensation of geometric errors is available in ISO/TR 16907.

## 5.9 Machining tests

Machining tests shall be made with finishing cuts only, not with roughing cuts which are liable to generate appreciable cutting forces.

## 5.10 Minimum tolerance

By mutual agreement, the manufacturer/supplier and the user can establish the tolerance for a measuring length different from that given in the tests described in Clauses 6 and 7. However, it shall be considered that the minimum value of tolerance is 0,005 mm unless otherwise specified.

When establishing the minimum tolerance, the measurement uncertainty associated with the test and the recommended instrument, shall be taken into account; see 5.7.

## 5.11 Diagrams

For reasons of simplicity, the diagrams in Clauses 6 and 7 illustrate only one type of machine.

Where applicable, the diagram box provides, for each test a), b) and c) identified in the object box, a schematic representation of a possible test setup, including the identification of the relevant coordinate plane (e.g. XY, YZ, ZX).

© ISO 2024 – All rights reserved

Documents
Document Sharing Hub
Full document details: BS ISO 2407:2024

# 6 Geometric tests

## 6.1 Linear axes motions

| **Object** | **G1** |
|---|---|
| Checking of straightness of the wheelhead (or workhead) slide motion along the Z-axis:<br>a) in the vertical plane, $E_{YZ}$;<br>b) in the horizontal plane, $E_{XZ}$. | |
| **Diagram** | |
| 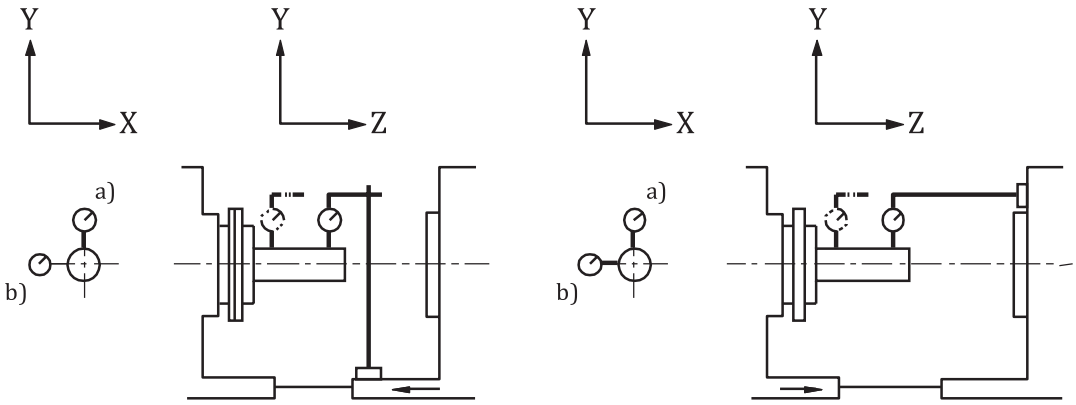 | |
| **Tolerance**<br>a) 0,015 for a measuring length of 250<br>b) 0,008 for a measuring length of 250 | |
| **Measurement results**<br>a)<br>b) | |
| **Measuring instruments**<br>Dial gauge and test mandrel or straightedge, or optical instruments | |
| **Observations and reference to ISO 230-1:2012, 8.2**<br>When a test mandrel is used, the dial gauge support shall be placed on the fixed part of the wheelhead and the test mandrel in the workholding spindle.<br>When a straightedge is used, the dial gauge support shall be placed on a fixed part of the wheelhead, the stylus touching a straightedge laid approximately parallel to the Z-axis motion.<br>When a straightedge is mounted on the workhead, its sag shall be taken into account.<br>When a straightedge is used for long axes, it can be mounted on a fixed part of the machine (e.g. bed). In this case, differential straightness measurements shall be conducted, one with wheelhead motion and the other with workhead motion, without moving the straightedge between the two sets of measurements. | |

© ISO 2024 – All rights reserved

Documents
Document Sharing Hub
Full document details: BS ISO 2407:2024

| **Object** | **G2** |
|---|---|
| Checking of squareness of the motion of the wheelhead cross slide or workhead cross slide (X-axis) to the Z-axis motion, $E_{B(0Z)X}$. | |

**Diagram**

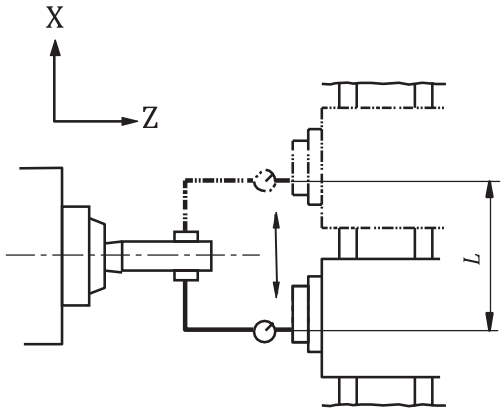


**Key**

*L* distance between the two points touched

**Tolerance**

0,020/300 (0,066/1 000)

where 300 is the distance between the two points touched, *L*.

**Measurement results**

**Measuring instruments**

Test mandrel and dial gauge support or optical instruments

**Observations and references to ISO 230-1:2012, 10.3.2 and 10.3.3**

Set a test mandrel on the workholding spindle and adjust the workhead (B'-axis) so that the spindle axis is parallel to the Z-axis motion.

Fix the dial gauge support on the test mandrel, with the stylus of the dial gauge touching a point of the wheel spindle.

Turn the workholding spindle through 180° and move the X-axis until the stylus again touches the same point.

The difference in the readings of the dial gauge divided by the distance, *L*, between the two points touched is the squareness error to be reported.

© ISO 2024 – All rights reserved



Documents
Document Sharing Hub
Full document details: BS ISO 2407:2024