BS ISO 2408:2017

BSI Standards Publication

Steel wire ropes — Requirements

Documents
Document Sharing Hub

Full document details: BS ISO 2408:2017

National foreword

This British Standard is the UK implementation of ISO 2408:2017.

The UK participation in its preparation was entrusted to Technical Committee MHE/2, Wire ropes.

A list of organizations represented on this committee can be obtained on request to its secretary.

This publication does not purport to include all the necessary provisions of a contract. Users are responsible for its correct application.

© The British Standards Institution 2017
Published by BSI Standards Limited 2017

ISBN 978 0 580 92022 6

ICS 77.140.65

Compliance with a British Standard cannot confer immunity from legal obligations.

This British Standard was published under the authority of the Standards Policy and Strategy Committee on 30 June 2017.

Amendments/corrigenda issued since publication

Date	Text affected

Documents
Document Sharing Hub

Full document details: BS ISO 2408:2017

INTERNATIONAL STANDARD

ISO 2408

Fourth edition
2017-06

Steel wire ropes — Requirements

Câbles en acier — Exigences

Reference number
ISO 2408:2017(E)

Documents
Document Sharing Hub

© ISO 2017

Full document details: BS ISO 2408:2017

COPYRIGHT PROTECTED DOCUMENT

© ISO 2017, Published in Switzerland

All rights reserved. Unless otherwise specified, no part of this publication may be reproduced or utilized otherwise in any form or by any means, electronic or mechanical, including photocopying, or posting on the internet or an intranet, without prior written permission. Permission can be requested from either ISO at the address below or ISO's member body in the country of the requester.

ISO copyright office
Ch. de Blandonnet 8 • CP 401
CH-1214 Vernier, Geneva, Switzerland
Tel. +41 22 749 01 11
Fax +41 22 749 09 47
copyright@iso.org
www.iso.org

© ISO 2017 – All rights reserved

Documents
Document Sharing Hub

Full document details: BS ISO 2408:2017

Contents

Page

Foreword ... **v**
Introduction ... **vii**
1 Scope ... **1**
2 Normative references ... **1**
3 Terms and definitions ... **1**
4 Requirements ... **2**
4.1 Material ... 2
4.1.1 Wire ... 2
4.1.2 Core ... 2
4.1.3 Lubricant ... 2
4.2 Rope manufacture ... 2
4.2.1 General ... 2
4.2.2 Wire joints ... 3
4.2.3 Lubrication ... 3
4.2.4 Preformation and postformation ... 3
4.2.5 Construction ... 3
4.2.6 Grade ... 3
4.2.7 Wire finish ... 3
4.2.8 Direction and type of lay ... 4
4.3 Designation and classification ... 4
4.4 Dimensions ... 4
4.4.1 Diameter ... 4
4.4.2 Lay length ... 5
4.4.3 Rope length ... 6
4.5 Breaking force ... 6
4.5.1 General ... 6
4.5.2 Ropes produced in series ... 6
5 Verification of requirements and test methods ... **7**
5.1 Materials ... 7
5.2 Rope manufacture ... 7
5.3 Test on rope for diameter ... 7
5.4 Test on rope for breaking force ... 8
5.4.1 Method 1: Measured breaking force, F_m ... 8
5.4.2 Method 2: Calculated measured (post-spin) breaking force ... 8
5.4.3 Method 3: Calculated measured (pre-spin) breaking force ... 9
5.4.4 Method 4: Measured aggregate breaking force, $F_{e.m}$ ... 9
6 Information for use ... **9**
6.1 Certificate ... 9
6.1.1 General ... 9
6.1.2 Test results ... 10
6.2 Packaging and marking ... 10
6.2.1 Packaging ... 10
6.2.2 Marking ... 10
Annex A (normative) **Dimensional and mechanical properties of round wires (before rope making)** ... **12**
Annex B (normative) **Sampling and acceptance criteria for type testing of ropes produced in series** ... **15**
Annex C (normative) **Calculation of minimum breaking force for ropes in the tables of Annex D and Annex H** ... **17**

© ISO 2017 – All rights reserved

Documents
Document Sharing Hub
Full document details: BS ISO 2408:2017

Annex D (normative) **Tables of minimum breaking forces for more common rope classes, sizes and grades** **20**
Annex E (informative) **Tests on wires taken from the rope** **43**
Annex F (informative) **Comparison between metric and imperial rope sizes** **45**
Annex G (informative) **Rope grade approximations** **47**
Annex H (informative) **Large diameter wire ropes** **48**
Bibliography **50**

© ISO 2017 – All rights reserved
Documents
Document Sharing Hub
Full document details: BS ISO 2408:2017

Foreword

ISO (the International Organization for Standardization) is a worldwide federation of national standards bodies (ISO member bodies). The work of preparing International Standards is normally carried out through ISO technical committees. Each member body interested in a subject for which a technical committee has been established has the right to be represented on that committee. International organizations, governmental and non-governmental, in liaison with ISO, also take part in the work. ISO collaborates closely with the International Electrotechnical Commission (IEC) on all matters of electrotechnical standardization.

The procedures used to develop this document and those intended for its further maintenance are described in the ISO/IEC Directives, Part 1. In particular the different approval criteria needed for the different types of ISO documents should be noted. This document was drafted in accordance with the editorial rules of the ISO/IEC Directives, Part 2 (see www.iso.org/directives).

Attention is drawn to the possibility that some of the elements of this document may be the subject of patent rights. ISO shall not be held responsible for identifying any or all such patent rights. Details of any patent rights identified during the development of the document will be in the Introduction and/or on the ISO list of patent declarations received (see www.iso.org/patents).

Any trade name used in this document is information given for the convenience of users and does not constitute an endorsement.

For an explanation on the voluntary nature of standards, the meaning of ISO specific terms and expressions related to conformity assessment, as well as information about ISO's adherence to the World Trade Organization (WTO) principles in the Technical Barriers to Trade (TBT) see the following URL: www.iso.org/iso/foreword.html.

This document was prepared by Technical Committee ISO/TC 105, *Steel wire ropes*.

This fourth edition cancels and replaces the third edition (ISO 2408:2004), which has been technically revised with the following main changes:

— "general purposes" and "minimum" have been deleted from the title;

— "oil and gas industry and fishing" has been deleted in the scope;

— the definitions of "calculated aggregate minimum breaking force of core, F_0" have been increased;

— in Table 1, Rope grade 2160 has been increased to 2 360 MPa;

— the sentence "All wires of the same nominal diameter in the same wire layer shall be of the same tensile strength grade." in 4.1.1 has been deleted;

— in 4.2.2, the sentence "Twisting for wires up to and including 0,4 mm, and brazing for wires over 0,4 mm," has been deleted and has been replaced with "the minimum distance between wire joints within one strand shall be 20 × *d*";

— "type" has been used to replace "duty" in 4.2.3, and the sentence "The purchaser should specify the rope duty or any particular lubrication requirements" has been deleted;

— "Zn-Al coated" has been increased in 4.2.7;

— note d) in 4.5.1 has been deleted;

— the "breaking force testing requirements without ISO quality system" column in Table 4 has been deleted;

— the requirement of measuring instrument for diameter measurement in 5.3 has been increased;

© ISO 2017 – All rights reserved

Documents
Document Sharing Hub
Full document details: BS ISO 2408:2017

— these sentences in 5.4.1 have been deleted:

"a) the selected test piece shall have its ends secured to ensure that the rope does not unravel;

b) the minimum free test length excluding any rope terminations shall be 600 mm or 30 × nominal rope diameter, whichever is the greater;

c) after 80 % of the minimum breaking force has been applied, the force shall be increased at a rate of not more than 0,5 % of the minimum breaking force per second";

— the "measured aggregate breaking force, $F_{e.m}$" in 5.4.4 has been increased;

— in 6.1.1, g) maximum wire diameter and h) metallic cross-sectional area have been added;

— in 6.1.2 b) mass of coating, "(if applicable)" has been added;

— markings have been detailed in 6.2;

— the sentence "The value of wire exceeding the grades in the table should be agreed by the supplier and purchaser" has been added in Annex A;

— B.2 has been added in Annex B;

— in Annex C (previously Annex D), the metallic cross-section ratio, the weight ratio, and the calculating ratio for compacted strand wire rope columns have been added;

— in Annex D (previously Annex C), 6 × 19 M, 8 × 7, 18 × 19S, 18 × 19W, 36(M) × 7 have been added in rope construction and tables for 4 × 19 class, 4 × 36 class and K4 × 35N class have been added;

— "rope grade equivalents" has been changed to "rope grade approximations" in Annex G, and a note has been added;

— Annex H has been added;

— editorial revisions have been made.

© ISO 2017 – All rights reserved
Documents
Document Sharing Hub
Full document details: BS ISO 2408:2017

Introduction

This document was developed in response to a worldwide demand for a specification giving requirements for steel wire ropes.

As in previous editions, this document specifies metric sizes and grades of rope for the more common classes of rope; see Annex F. A comparison of rope grades is provided in Annex G.

© ISO 2017 – All rights reserved

Documents
Document Sharing Hub
Full document details: BS ISO 2408:2017

Documents
Document Sharing Hub

Full document details: BS ISO 2408:2017

Steel wire ropes — Requirements

1 Scope

This document specifies requirements for the manufacture, testing, acceptance, packing, marking and issuing of a certificate of quality of wire ropes. It is applicable to round strand ropes and compacted strand ropes made from wires ropes that are uncoated (bright), zinc-coated or Zn-Al coated.

It is not applicable to ropes for

— mining purposes,

— aircraft control,

— aerial ropeways and funiculars, and

— lifts.

2 Normative references

The following documents are referred to in the text in such a way that some or all of their content constitutes requirements of this document. For dated references, only the edition cited applies. For undated references, the latest edition of the referenced document (including any amendments) applies.

ISO 2232:1990, *Round drawn wire for general purpose non-alloy steel wire ropes and for large diameter steel wire ropes — Specifications*

ISO 3108, *Steel wire ropes for general purposes — Determination of actual breaking load*

ISO 4345, *Steel wire ropes — Fibre main cores — Specification*

ISO 4346, *Steel wire ropes for general purposes — Lubricants — Basic requirements*

ISO 6892-1, *Metallic materials — Tensile testing — Part 1: Method of test at room temperature*

ISO 7800, *Metallic materials — Wire — Simple torsion test*

ISO 17893, *Steel wire ropes — Vocabulary, designation and classification*

3 Terms and definitions

For the purposes of this document, the terms and definitions given in ISO 17893 and the following apply.

ISO and IEC maintain terminological databases for use in standardization at the following addresses:

— ISO Online browsing platform: available at http://www.iso.org/obp

— IEC Electropedia: available at http://www.electropedia.org/

3.1
calculated aggregate minimum breaking force of core
F_0
value of the aggregate minimum breaking force obtained by calculation from the cross-sectional area (based on nominal wire diameter) and tensile strength grade of each wire in the core, as given in the manufacturer's rope design

© ISO 2017 – All rights reserved

Documents
Document Sharing Hub
Full document details: BS ISO 2408:2017

4 Requirements

4.1 Material

4.1.1 Wire

Before rope making, wires shall conform to the diameter, torsion and, where applicable, coating requirements specified in Annex A.

NOTE 1 Annex A is based on ISO 2232 but with extended wire sizes and wire tensile strength grades.

NOTE 2 For a given wire size and tensile strength grade, the torsional properties of the wires in ISO 10425:2003, A.2 meet or exceed the values given in Annex A.

For those ropes where a rope grade is applicable, the tensile strength grades of the wires shall be subject to the limits given in Table 1.

Table 1 — Tensile strength grades of wires (excluding centre and filler wires) for given rope grades

Rope grade	Range of wire tensile strength grades N/mm^2
1570	1 370 to 1 770
1770	1 570 to 1 960
1960	1 770 to 2 160
2160	1 960 to 2 360

NOTE 3 The minimum breaking force values of those ropes of grades 1570, 1770, 1960 and 2160 as covered by Table D.1 to Table D.14 are calculated on the basis of rope grade and not individual wire tensile strength grades.

The methods of test shall be in accordance with ISO 2232.

4.1.2 Core

Cores of single-layer stranded ropes shall normally be of steel or fibre, although other types such as composites (e.g. steel plus fibre or steel plus polymer) or solid polymer may also be supplied.

The purchaser should specify any particular core type requirements.

Fibre cores for single-layer stranded ropes shall conform to ISO 4345 and rope diameters 8 mm and above shall be doubly closed (i.e. from yarn into strand and from strand into rope).

Natural fibre cores shall be treated with an impregnating compound to inhibit rotting and decay.

Steel cores shall be either an independent wire rope (IWRC) or a wire strand (WSC).

Steel cores of single-layer stranded ropes larger than 12 mm diameter shall be an independent wire rope (IWRC), unless specified otherwise.

4.1.3 Lubricant

Lubricants shall conform to ISO 4346.

4.2 Rope manufacture

4.2.1 General

All the wires in a strand shall have the same direction of lay.

© ISO 2017 – All rights reserved
Documents
Document Sharing Hub
Full document details: BS ISO 2408:2017

The core, except for compacted (swaged) ropes, shall be designed (steel) or selected (fibre) so that in a new rope under tension on the closing machine, there is clearance between the outer strands.

The completed rope shall be evenly laid and free from loose wires, distorted strands and other irregularities.

The new wire rope shall not have a three-dimensional wave.

Rope ends that have no end fittings shall, when necessary, be secured so as to maintain the integrity of the wire rope and prevent its unlaying.

4.2.2 Wire joints

Wires over 0,4 mm in diameter shall, where necessary, have their ends joined by welding.

Wires up to and including 0,4 mm diameter shall, where necessary, be joined by brazing, welding or by ends being simply inserted in the strand's formation.

The minimum distance between wire joints within one strand shall be 20 × rope diameter (d).

4.2.3 Lubrication

The amount of lubrication and type of lubricant shall be appropriate to the rope type and its use.

4.2.4 Preformation and postformation

Ropes shall be preformed and/or postformed unless specified otherwise by the purchaser.

NOTE Large diameter wire rope, some parallel-closed and rotation-resistant ropes, can be non-preformed or be only partially preformed.

4.2.5 Construction

The rope construction shall be either one of those covered in Annex D, Annex H or as stated by the manufacturer.

If the purchaser only specifies the rope classification, the manufacturer should state the rope construction clearly.

The purchaser should specify the rope construction or classification.

4.2.6 Grade

The rope grades for the more common classes of ropes shall be as given in Table D.1 to Table D.22.

Other rope grades, including those as given in ISO 10425, may be supplied by agreement between the purchaser and the manufacturer, providing all of the other requirements are met.

NOTE Not all ropes will necessarily have a rope grade.

4.2.7 Wire finish

The finish of the wires shall be uncoated (bright), zinc-coated quality B, zinc coated quality A or Zn-Al coated.

For ropes of bright wire finish, substitution of bright wires by zinc-coated wires shall be limited to inner wires, centre wires, filler wires and core wires.

For ropes of zinc coated wire finish, all of the wires shall be zinc coated, including those of any steel core.

Where zinc-coated is specified, this may also include Zn-Al alloy.

© ISO 2017 – All rights reserved

Documents
Document Sharing Hub
Full document details: BS ISO 2408:2017

4.2.8 Direction and type of lay

The direction and type of rope lay shall be one of the following:

a) right ordinary lay (sZ);

NOTE 1 Formerly referred to as right hand ordinary (designated RHO) and right regular lay (designated RRL).

b) left ordinary lay (zS);

NOTE 2 Formerly referred to as left hand ordinary (designated LHO) and left regular lay (designated LRL).

c) right lang lay (zZ);

NOTE 3 Formerly referred to as right hand langs (designated RHL) or right lang lay (designated RLL).

d) left lang lay (sS);

NOTE 4 Formerly referred to as left hand langs (designated LHL) or left lang lay (designated LLL).

The direction and type of rope lay should be specified by the purchaser.

4.3 Designation and classification

Rope designation and classification shall conform to the system requirements of ISO 17893.

4.4 Dimensions

4.4.1 Diameter

4.4.1.1 General

The nominal diameter shall be the dimension by which the rope is designated.

4.4.1.2 Tolerance

When measured in accordance with 5.3, the measured diameter shall be within the tolerances given in Table 2.

© ISO 2017 – All rights reserved
Documents
Document Sharing Hub
Full document details: BS ISO 2408:2017

Table 2 — Tolerances on rope diameter

Rope type	Nominal rope diameter d mm	Tolerance as percentage of nominal diameter	
		Ropes with strands that are exclusively of wire or incorporate solid polymer centres	Ropes with strands that incorporate fibre centres[a]
Round steel wire rope	$2 \leq d < 4$	$^{+8}_{0}$	—
	$4 \leq d < 6$	$^{+7}_{0}$	$^{+9}_{0}$
	$6 \leq d < 8$	$^{+6}_{0}$	$^{+8}_{0}$
	$8 \leq d < 60$	$^{+5}_{0}$	$^{+7}_{0}$
	$d \geq 60$	$^{+5}_{0}$	—
Compacted strand rope	$d \geq 10$	$^{+5}_{0}$	—

[a] For example, 6 × 24 FC-FC.

4.4.1.3 Difference between diameter measurements

The difference between any two of the four measurements taken in accordance with 5.3 and expressed as a percentage of the nominal rope diameter shall not exceed the values given in Table 3.

Table 3 — Permissible differences between any two diameter measurements

Rope type	Nominal rope diameter d mm	Differences as percentage of nominal diameter	
		Ropes with strands that are exclusively of wire or incorporate solid polymer centres	Ropes with strands that incorporate fibre centres[a]
Round steel wire rope	$2 \leq d < 4$	7	—
	$4 \leq d < 6$	6	8
	$6 \leq d < 8$	5	7
	$8 \leq d < 60$	4	6
	$d \geq 60$	4	—
Compacted strand rope	$d \geq 10$	4	—

[a] For example, 6 × 24 FC-FC.

4.4.2 Lay length

For single-layer ropes of 6 × 7 class, the length of lay of the finished rope shall not exceed 8 × d.

For other single-layer ropes with round strands (except those with three or four strands), parallel closed ropes and rotation-resistant ropes with round strands or shaped strands, the length of lay of the finished rope shall not exceed 7,5 × d.

For single-layer ropes with shaped strands, e.g. triangular strand, the length of lay of the finished rope shall not exceed 10 × d.

© ISO 2017 – All rights reserved

Documents
Document Sharing Hub
Full document details: BS ISO 2408:2017

4.4.3 Rope length

The length of rope supplied, under no load, shall be equivalent to the specified length subject to the following tolerances:

— ≤400 m: $^{+5}_{0}$ %;

— >400 m and ≤1 000 m: $^{+20}_{0}$ m;

— >1 000 m: $^{+2}_{0}$ %.

4.5 Breaking force

4.5.1 General

The minimum breaking force, F_{min}, for a given rope diameter and construction shall be either

a) as given in Table D.1 to Table D.22 or Table H.1, or

b) as stated by the manufacturer.

For the determination of minimum breaking forces of rope diameters not listed in Table D.1 to Table D.22 or Table H.1, calculations in accordance with Annex C can be used.

When tested in accordance with 5.4.1, the measured breaking force, F_m, shall be greater than or equal to the minimum breaking force, F_{min}.

Breaking force testing requirements shall be in accordance with Table 4.

NOTE The requirements for breaking force testing take into account: a) the rope size; b) whether or not ropes are produced in series, i.e. repeatedly produced; c) whether or not the minimum breaking force factor is consistent throughout a range of diameters.

4.5.2 Ropes produced in series

The manufacturer shall be able to provide the results from type testing in accordance with the sampling and acceptance criteria in Annex B.

Type testing shall be repeated on any rope that has its design changed in any way which results in a modified (e.g. increased) breaking force. If the same design, apart from wire tensile strength grades, is used for ropes of a lower grade or lower breaking force, or both, than the one which has successfully passed the type testing requirements, it shall not be necessary to repeat the tests on those ropes provided the breaking force is calculated with the same spinning loss.

Subsequent production lengths of ropes produced in series shall be deemed to conform to the breaking force requirements when the manufacturer has satisfactorily completed, on a sample from every 20th production length

a) the appropriate type tests (see Annex B), and

b) a periodic breaking force test in accordance with Method 1 (see 5.4.1) or one of the alternative methods, known as Method 2 (see 5.4.2), Method 3 (see 5.4.3) and Method 4 (see 5.4.4).

© ISO 2017 – All rights reserved
Documents
Document Sharing Hub
Full document details: BS ISO 2408:2017

Table 4 — Breaking force testing requirements

Rope diameter	Min. breaking force factor	Breaking force testing requirements
Up to and including 60 mm	Same factor throughout a subgroup of rope diameters	Breaking force test in accordance with 5.4.1 (Method 1) on a sample from each production length; Or, if produced in series, type testing in accordance with the sampling regime and acceptance criteria of B.1 plus periodic breaking force test in accordance with 5.4.1 (Method 1), 5.4.2 (Method 2), 5.4.3 (Method 3) or 5.4.4 (Method 4)on a sample from every 20th production length relating to the subgroup of diameters.
	Different factor throughout a subgroup of rope diameters	Breaking force test in accordance with 5.4.1 (Method 1) on a sample from each production length; Or, if produced in series, type testing in accordance with the sampling regime and acceptance criteria of B.2 plus periodic test in accordance with 5.4.1 (Method 1), 5.4.2 (Method 2), 5.4.3 (Method 3) or 5.4.4(Method 4) on a sample from every 20th production length of a given rope diameter and construction.
Over 60 mm		Breaking force test in accordance with 5.4.1 (Method 1), 5.4.2 (Method 2), 5.4.3 (Method 3) or 5.4.4 (Method 4)on a sample from each production length, or either of the following: a) if produced in series, type testing in accordance with B.2 plus periodic breaking force test in accordance with 5.4.1 (Method 1), 5.4.2 (Method 2), 5.4.3 (Method 3) or 5.4.4 (Method 4) on a sample from every 20th production length; or b) if produced for supply as a set of ropes of the same design for a specific installation the alternative breaking force testing and sampling as also given in B.2.
NOTE Breaking force type testing demonstrates that a steel wire rope produced in series and certified by the manufacturer as conforming to this document possesses the minimum breaking force stated by the manufacturer. The purpose of these tests is to prove the design, material and method of manufacture.		

5 Verification of requirements and test methods

5.1 Materials

Conformity with the wire, core and lubricant requirements shall be confirmed through a visual verification of the inspection documents supplied with the wire, core and lubricant, respectively.

5.2 Rope manufacture

Conformity with the requirements for wire joints and preformation shall be confirmed through visual verification.

5.3 Test on rope for diameter

Diameter measurements shall be taken on a straight portion of rope, either under no tension or a tension not exceeding 5 % of the minimum breaking force, at two positions spaced at least 1 m apart. At each position, two measurements, at 90° apart, of the circumscribed circle diameter shall be taken. The measuring equipment shall extend over at least two adjacent strands (see Figure 1).

The average of these four measurements shall be the measured in diameter.

For wire rope diameter ≤26 mm, the minimum scale value of the measuring instrument shall be 0,02 mm or less. For wire rope diameter from 26 mm to 100 mm, the minimum scale value of the measuring instrument shall be 0,05 mm or less. For wire rope over 100 mm, the minimum scale value of the measuring instrument shall be 0,1 mm or less.

© ISO 2017 – All rights reserved

Documents
Document Sharing Hub
Full document details: BS ISO 2408:2017

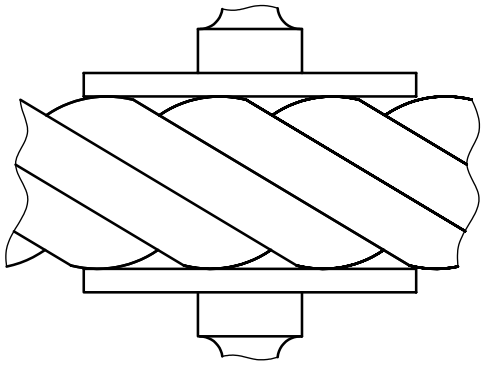

Figure 1 — Method of measuring rope diameter

5.4 Test on rope for breaking force

5.4.1 Method 1: Measured breaking force, F_m

Besides following regulations, the testing method and acceptance shall be in accordance with ISO 3108.

a) If the measured breaking force, F_m, reaches or exceeds the minimum breaking force, F_{min}, the test may be terminated without breaking the rope.

b) If in the first tensile test, the measured breaking force, F_m, does not reach the minimum breaking force, F_{min}, it can be repeated three additional times. Once a test reaches or exceeds the F_{min}, the wire rope has met the minimum breaking force.

c) If the breaking is within the distance 6 times of wire rope diameter from the clamp or the ends, and F_m is less than F_{min}, the testing shall be determined invalid, the invalid test is not counted as one of the four allowed tests.

5.4.2 Method 2: Calculated measured (post-spin) breaking force

Add together the measured breaking forces of all the individual wires after they have been removed from the rope and multiply this value by either

a) the spinning loss factor derived from Annex C, or

b) the partial spinning loss factor obtained from the results of type testing.

The partial spinning loss factor used in the calculation shall be the lowest of the three values obtained from type testing.

In the case of triangular strand ropes, the triangular centre of the strand may be considered as an individual wire.

The wires shall be tested in accordance with the wire tensile test specified in ISO 6892-1.

NOTE The result from this test is known as the "calculated measured (post-spin) breaking force".

When this method (i.e. Method 2) is used for the periodic test (see Table 4) and the calculated measured (post-spin) breaking force value is less than the intended minimum breaking force value, another test using Method 1 shall be carried out.

If the measured (actual) breaking force in this second test fails to meet the intended minimum breaking force value, the minimum breaking force shall be de-rated to a value not exceeding the measured (actual) breaking force value and type testing shall be repeated using Method 1.

© ISO 2017 – All rights reserved
Documents
Document Sharing Hub
Full document details: BS ISO 2408:2017

In such cases, the rope grade shall either be de-rated in line with the de-rated minimum breaking force value or deleted from the rope designation.

5.4.3 Method 3: Calculated measured (pre-spin) breaking force

Add together the measured breaking forces of all the individual wires before they are laid into the rope and multiply this value by the total spinning loss factor obtained from the results of type testing. The total spinning loss factor used in the calculation shall be the lowest value of the three values obtained from type testing.

The wires shall be tested in accordance with the wire tensile test specified in ISO 6892-1.

NOTE The result from this test is known as the "calculated measured (pre-spin) breaking force".

When this method (i.e. Method 3) is used for the periodic test (see Table 4) and the calculated measured (pre-spin) breaking force value is less than the intended minimum breaking force value, another test using Method 1 shall be carried out.

If the measured breaking force in this second test fails to meet the intended minimum breaking force value, the minimum breaking force shall be de-rated to a value not exceeding the measured breaking force value and type testing shall be repeated using Method 1.

5.4.4 Method 4: Measured aggregate breaking force, $F_{e.m}$

5.4.4.1 The wires from the rope shall be tested in accordance with the wire tensile test specified in ISO 6892-1.

5.4.4.2 Add together the breaking forces of all individual wires if all wires tested.

5.4.4.3 If partial wires are tested, the aggregate breaking force of wires is calculated by Formula (1):

$$F_{e.m} = F_0 + F_1 N_1 + F_2 N_2 + F_3 N_3 + \ldots + F_n N_n \quad (1)$$

where

F_0 is the calculated aggregate minimum breaking force of core;

$F_1, F_2, F_3 \ldots F_n$ is the sum of the measured breaking force of wires in the same construction, same diameter strand and the calculated breaking force of wires not tested;

$N_1, N_2, N_3 \ldots N_n$ are the numbers of the same construction and same diameter strands of wire rope.

The sampling parameters conform to Annex E .

If testing two strands or more for the same construction and same diameter strands, it should be calculated by average value.

In such cases, the rope grade shall either be de-rated in line with the de-rated minimum breaking force value or deleted from the rope designation.

6 Information for use

6.1 Certificate

6.1.1 General

A certificate shall confirm conformity with this document.

© ISO 2017 – All rights reserved

Documents
Document Sharing Hub
Full document details: BS ISO 2408:2017

Unless specified otherwise by the purchaser, the certificate shall give at least the following information:

a) certificate number;

b) name and address of the manufacturer;

c) quantity and nominal length of rope (optional);

d) rope designation (see ISO 17893);

e) minimum breaking force;

f) date of issue of the certificate and authentication.

g) maximum wire diameter;

h) metallic cross-sectional area;

The certificate number shall enable traceability of the rope.

The issuing of a certificate by the manufacturer and whether or not specific test results are given should be the subject of agreement between the purchaser and the manufacturer.

6.1.2 Test results

When test results are provided, the certificate shall additionally give either a) or b) or both, as follows:

a) breaking force test on rope: state which value, i.e.

   1) measured breaking force, or

   2) calculated measured (post-spin) breaking force, or

   3) calculated measured (pre-spin) breaking force;

b) tests on wires:

   1) number of wires tested;

   2) nominal diameter of wires;

   3) measured breaking force of wire;

   4) tensile strength based on nominal diameter;

   5) number of torsions completed (and test length);

   6) mass of coating (if applicable).

6.2 Packaging and marking

6.2.1 Packaging

Ropes shall be supplied on reels or in coils.

The purchaser should specify any particular packaging requirements.

6.2.2 Marking

6.2.2.1 There should be a marker tape incorporated into the centre of the rope, so as to remain recognizable despite soiling, soaking or discoloration during use.

© ISO 2017 – All rights reserved
Documents
Document Sharing Hub
Full document details: BS ISO 2408:2017