BS ISO 24365:2022

BSI Standards Publication

Radiators and convectors — Methods and rating for determining the heat output

Documents
Document Sharing Hub

Full document details: BS ISO 24365:2022

National foreword

This British Standard is the UK implementation of ISO 24365:2022.

The UK participation in its preparation was entrusted to Technical Committee RHE/2, Ventilation for buildings, heating and hot water services.

A list of organizations represented on this committee can be obtained on request to its committee manager.

Contractual and legal considerations

This publication has been prepared in good faith, however no representation, warranty, assurance or undertaking (express or implied) is or will be made, and no responsibility or liability is or will be accepted by BSI in relation to the adequacy, accuracy, completeness or reasonableness of this publication. All and any such responsibility and liability is expressly disclaimed to the full extent permitted by the law.

This publication is provided as is, and is to be used at the recipient's own risk.

The recipient is advised to consider seeking professional guidance with respect to its use of this publication.

This publication is not intended to constitute a contract. Users are responsible for its correct application.

© The British Standards Institution 2023
Published by BSI Standards Limited 2023

ISBN 978 0 539 06758 3

ICS 91.040.01; 97.100.01

Compliance with a British Standard cannot confer immunity from legal obligations.

This British Standard was published under the authority of the Standards Policy and Strategy Committee on 31 July 2023.

Amendments/corrigenda issued since publication

Date	Text affected

Documents
Document Sharing Hub

Full document details: BS ISO 24365:2022

INTERNATIONAL STANDARD

ISO 24365

First edition
2022-08

Radiators and convectors — Methods and rating for determining the heat output

Reference number
ISO 24365:2022(E)

Documents
Document Sharing Hub

© ISO 2022

Full document details: BS ISO 24365:2022

COPYRIGHT PROTECTED DOCUMENT

© ISO 2022

All rights reserved. Unless otherwise specified, or required in the context of its implementation, no part of this publication may be reproduced or utilized otherwise in any form or by any means, electronic or mechanical, including photocopying, or posting on the internet or an intranet, without prior written permission. Permission can be requested from either ISO at the address below or ISO's member body in the country of the requester.

ISO copyright office
CP 401 • Ch. de Blandonnet 8
CH-1214 Vernier, Geneva
Phone: +41 22 749 01 11
Email: copyright@iso.org
Website: www.iso.org

Published in Switzerland

© ISO 2022 – All rights reserved

Documents
Document Sharing Hub

Full document details: BS ISO 24365:2022

Contents

Page

Foreword ... **v**

Introduction ... **vi**

1 Scope ... **1**

2 Normative references ... **1**

3 Terms, definitions, symbols and units ... **1**
3.1 Terms and definitions ... 1
3.2 Symbols and units of measurement ... 4

4 Selection of heating appliances to be tested ... **5**
4.1 Classification ... 5
4.2 Selection of models to be tested for determining the thermal outputs of a type ... 6
4.2.1 Selection of models to be tested when the variable characteristic dimension is the overall height and the cross-section of the variable part is constant ... 6
4.2.2 Selection of models to be tested when the variable characteristic dimension for the type is other than the overall height ... 7
4.3 Testing samples submission and identification ... 8
4.4 Supplementary test ... 11

5 Laboratory equipment and test methods ... **11**
5.1 Principle ... 11
5.2 Apparatus ... 11
5.2.1 Test system ... 11
5.2.2 Reference test installation ... 11
5.2.3 Master radiators ... 14
5.2.4 Verification of test installation repeatability and reproducibility ... 18
5.2.5 Accuracy of measuring instruments and devices ... 23
5.2.6 Calibration of measuring instruments ... 24
5.3 Preparation for thermal output test ... 24
5.4 Test methods ... 24
5.4.1 General ... 24
5.4.2 Weighing method ... 24
5.4.3 Electric method ... 25
5.4.4 Measurements and calculations ... 25
5.4.5 Determination of the characteristic equation ... 28
5.5 Presentation of results ... 29
5.5.1 Standard thermal output of a model ... 29
5.5.2 Determination of the catalogue outputs of a type made at variable water flow rate ... 30

6 Test report ... **30**

Annex A (normative) **Master radiators dimensional verification** ... **33**

Annex B (informative) **Determination of pressure drop** ... **38**

Annex C (normative) **Least squares regression for a model** ... **43**

Annex D (normative) **Analysis of test results by the method of least squares multiple regression** ... **44**

Annex E (normative) **Specimen of the test report** ... **46**

Annex F (informative) **Apparatus and method for checking the bulk temperature measuring devices** ... **49**

Annex G (informative) **Examples of typical appliances according to Table 4** ... **51**

Annex H (normative) **Determination of the Φ_M values of the master radiators primary set** ... **61**

Annex I (normative) **Calculation method for determining the energy calculation parameters** ... **62**

AVA Documents
Document Sharing Hub

© ISO 2022 – All rights reserved

Full document details: BS ISO 24365:2022

Bibliography **64**

© ISO 2022 – All rights reserved
Documents
Document Sharing Hub
Full document details: BS ISO 24365:2022

Foreword

ISO (the International Organization for Standardization) is a worldwide federation of national standards bodies (ISO member bodies). The work of preparing International Standards is normally carried out through ISO technical committees. Each member body interested in a subject for which a technical committee has been established has the right to be represented on that committee. International organizations, governmental and non-governmental, in liaison with ISO, also take part in the work. ISO collaborates closely with the International Electrotechnical Commission (IEC) on all matters of electrotechnical standardization.

The procedures used to develop this document and those intended for its further maintenance are described in the ISO/IEC Directives, Part 1. In particular, the different approval criteria needed for the different types of ISO documents should be noted. This document was drafted in accordance with the editorial rules of the ISO/IEC Directives, Part 2 (see www.iso.org/directives).

Attention is drawn to the possibility that some of the elements of this document may be the subject of patent rights. ISO shall not be held responsible for identifying any or all such patent rights. Details of any patent rights identified during the development of the document will be in the Introduction and/or on the ISO list of patent declarations received (see www.iso.org/patents).

Any trade name used in this document is information given for the convenience of users and does not constitute an endorsement.

For an explanation of the voluntary nature of standards, the meaning of ISO specific terms and expressions related to conformity assessment, as well as information about ISO's adherence to the World Trade Organization (WTO) principles in the Technical Barriers to Trade (TBT), see www.iso.org/iso/foreword.html.

This document was prepared by Technical Committee ISO/TC 205, *Building environment design*.

Any feedback or questions on this document should be directed to the user's national standards body. A complete listing of these bodies can be found at www.iso.org/members.html.

© ISO 2022 – All rights reserved

Documents
Document Sharing Hub
Full document details: BS ISO 24365:2022

Introduction

This document results from the recognition that the heating appliances falling into the field of application hereinafter stated are traded on the basis of their thermal output.

To evaluate and compare different appliances it is therefore necessary to refer to a single stipulated value, hereinafter called the standard rated thermal output.

In addition, for low temperature systems, a standard low temperature thermal output is given.

The standard thermal outputs (standard rated thermal output and standard low temperature thermal output) are a defined value taken from the characteristic equation.

The pre-requisites of the standard thermal outputs, as defined by this document, are the following:

— to be representative of the actual output of the appliance in different operating conditions;

— to be reproducible within the tolerances defined by this document, taking into account the state of measuring techniques;

— to be representative of the thermal outputs, obtainable under the same test conditions, of any identical sample taken out of the current production (within the tolerances defined by this document, taking into account the state of measuring techniques and methods of manufacture).

© ISO 2022 – All rights reserved
Documents
Document Sharing Hub
Full document details: BS ISO 24365:2022

Radiators and convectors — Methods and rating for determining the heat output

1 Scope

This document defines procedures for determining the standard thermal outputs and other characteristics of radiators and convectors installed in a permanent manner in construction works, fed with water or steam at temperatures below 120 °C, supplied by a remote energy source.

This document specifies the laboratory arrangements and testing methods to be adopted, the admissible tolerances, the criteria for selecting the samples to be tested and for verifying the conformity of the current production with the samples tested at the initial test.

This document also defines the additional common data that the manufacturer shall provide with the product in order to ensure the correct application of the products.

This document does not apply to fan-assisted radiators, fan-assisted convectors and trench convectors or to independent heating appliances.

2 Normative references

The following documents are referred to in the text in such a way that some or all of their content constitutes requirements of this document. For dated references, only the edition cited applies. For undated references, the latest edition of the referenced document (including any amendments) applies.

ISO/IEC 17025, *General requirements for the competence of testing and calibration laboratories*

3 Terms, definitions, symbols and units

3.1 Terms and definitions

For the purposes of this document, the following terms and definitions apply.

ISO and IEC maintain terminology databases for use in standardization at the following addresses:

— ISO Online browsing platform: available at https://www.iso.org/obp

— IEC Electropedia: available at https://www.electropedia.org/

3.1.1
heating appliance
device having the purpose of transferring heat in order to provide specific temperature conditions inside buildings

3.1.2
independent heating appliance
self-contained *heating appliance* (3.1.1) which does not need to be connected to a remote energy source (e.g. a boiler) as it contains its own energy source (e.g. gas fired appliances, electric appliances, air to air heat pump appliances)

© ISO 2022 – All rights reserved

Documents
Document Sharing Hub
Full document details: BS ISO 24365:2022

3.1.3
radiator
heating appliance (3.1.1) produced with different materials (e.g. steel, aluminium, cast-iron) and with different designs (e.g. plate type, column type, tube type, finned tube type), which emits heat by free convection and radiation

3.1.4
sectional heating appliances
heating appliance (3.1.1) manufactured in sections of identical design and traded in this form, which can be joined together into modular assemblies so that the desired output can be obtained

Note 1 to entry: Mainly applied to *radiators* (3.1.3).

3.1.5
convector
heating appliance (3.1.1) which emits heat almost entirely by free convection

Note 1 to entry: A convector comprising at least a heat emitter and a casing which provides an unheated convective chimney of defined height.

3.1.6
skirting convector
special *convector* (3.1.5) of limited height running along the base of an interior wall

3.1.7
dry heating surface
secondary heating surface
portion of the heat emitting surface which is in contact with air only (e.g. fins projecting from the wet surface)

3.1.8
family of heating appliances
group of *heating appliances* (3.1.1) of similar design and construction and of identical material, positions of primary fluid connections and other related variables that particularly affect the conditions of flow of the primary fluid within the *heating appliance* (3.1.1)

3.1.9
model
heating appliance (3.1.1) of defined height, length and depth within a type

3.1.10
range of heights
difference between the maximum and minimum height of the *models* (3.1.9) in a type

3.1.11
module
<heating appliance>
reference length of the useful portion of a *heating appliance* (3.1.1)

Note 1 to entry: The module coincides with:

— the section, in the case of *sectional heating appliances* (3.1.4);

— a length of 1 m, in the case of non-sectional *heating appliances* (3.1.1);

— a finned length of 1 m, in the case of finned tube *convectors* (3.1.5).

3.1.12
sample
representative *heating appliance* (3.1.1) used for the determination of one or more of the performance characteristics

© ISO 2022 – All rights reserved
Documents
Document Sharing Hub
Full document details: BS ISO 24365:2022

3.1.13
inlet water temperature
bulk temperature of the water entering the *heating appliance* (3.1.1)

3.1.14
outlet water temperature
bulk temperature of the water leaving the *heating appliance* (3.1.1)

3.1.15
temperature drop
difference between *inlet* (3.1.13) and *outlet water temperature* (3.1.14)

3.1.16
mean water temperature
arithmetical mean of *inlet* (3.1.13) and *outlet water temperature* (3.1.14)

3.1.17
reference air temperature
air temperature measured on the vertical line at the centre of the test booth, 0,75 m above the floor level

3.1.18
excess temperature
difference between *mean water temperature* (3.1.16) and *reference air temperature* (3.1.17)

3.1.19
standard excess temperature
excess temperature (3.1.18) of 50 K as determined in the standard conditions

Note 1 to entry: *Inlet water temperature* (3.1.13) of 75 °C, *outlet water temperature* (3.1.14) of 65 °C and *reference air temperature* (3.1.17) of 20 °C.

3.1.20
air pressure
measured value at the test site

3.1.21
water flow rate
amount of water flowing through the *heating appliance* (3.1.1) per unit of time

3.1.22
standard water flow rate
water flow rate (3.1.21) relating to standard test conditions

3.1.23
standard rated thermal output
thermal output of a *heating appliance* (3.1.1) defined at 50 K *excess temperature* (3.1.18)

3.1.24
standard low temperature thermal output
thermal output of a *heating appliance* (3.1.1) defined at 30 K *excess temperature* (3.1.18)

3.1.25
characteristic equation
power function with a specific characteristic exponent that gives the thermal output as a function of the *excess temperature* (3.1.18) at constant *water flow rate* (3.1.21)

3.1.26
standard characteristic equation
characteristic equation (3.1.25) which is valid for *standard water flow rate* (3.1.22) and from which the standard thermal output can be found for the *standard excess temperature* (3.1.19) of 50 K

AVA Documents
Document Sharing Hub

© ISO 2022 – All rights reserved

Full document details: BS ISO 24365:2022

3.1.27
test installation
combination of:

— test booth and other related parts, and

— measuring instruments and related equipment

3.1.28
test system
combination of:

— *test installation* (3.1.27), and

— *master radiators* (3.1.34)

3.1.29
pressure drop
difference of pressure between water inlet and water outlet of the *heating appliance* (3.1.1)

3.1.30
supplementary test
test for the purpose of establishing the effect of minor technical modifications on the thermal output of *radiators* (3.1.3) that have already been tested

3.1.31
radiated heat output factor
Sk
assumed ratio between the radiation heat output and the overall heat output of the *radiator* (3.1.3), which is only valid for *air pressure* (3.1.20) correction purposes

3.1.32
exponent n_p
exponent for the *air pressure* (3.1.20) correction of the measured heat output of the *radiator* (3.1.3)

3.1.33
emissivity
ε
ratio of energy radiated by a particular material to energy radiated by a black body at the same temperature

3.1.34
master radiator
sample (3.1.12) used for the calibration of *test installations* (3.1.27)

Note 1 to entry: Master radiators are used to determine repeatability and reproducibility of the results of the *test installations* (3.1.27) (see 5.2.3).

3.2 Symbols and units of measurement

Table 1 — Symbols, quanties and units of measurement

Quantity	Symbol	Unit
Thermal output	Φ	W
Standard thermal output	Φ_S	W
Modular thermal output	Φ_L	W
Reference value of a master radiator	Φ_0	W
Reference value of a primary set of master radiators for interlaboratory comparisons	Φ_M	W
Electrical method heat losses	Φ_V	W

© ISO 2022 – All rights reserved
Documents
Document Sharing Hub
Full document details: BS ISO 24365:2022

Table 1 *(continued)*

Quantity	Symbol	Unit
Electric power	P_{el}	W
Thermodynamic temperature	T	K
Temperature	T	°C
Inlet water temperature	T_1	°C
Outlet water temperature	T_2	°C
Temperature drop	T_1-T_2	K
Mean water temperature	T_m	°C
Reference room air temperature	T_r	°C
Excess temperature	ΔT	K
Specific heat capacity	c_p	J/kg·K
Specific enthalpy	h	J/kg
Inlet water enthalpy	h_1	J/kg
Outlet water enthalpy	h_2	J/kg
Water flow rate	q_m	kg/s
Standard water flow rate	q_{ms}	kg/s
Pressure	p	kPa
Maximum operating pressure/resistance to pressure	p_{max}	kPa
Pressure drop	Δp	kPa
Repeatability tolerance	S_0	-
Reproducibility tolerance	S_m	-
Overall height of the heating appliance	H	m
Range of heights	H_r	m
Overall length of the heating appliance	L	m
Length of a section	L_S	m
Number of sections	N_S	-
Thermal resistance	R	m²·K/W
Time interval	τ	s
Radiated heat output factor	Sk	-
Emissivity	ε	-

4 Selection of heating appliances to be tested

4.1 Classification

4.1.1 Heating appliances shall be grouped into families and types according to the definition in this document. A family can include different types.

4.1.2 For the purposes of determining catalogue outputs, a family shall be divided into a number of separate types (in a family of radiators there can, for example, be single or double panels, with or without convector surfaces, using the same basic components).

4.1.3 The output of each model shall not be greater than 3 500 W and the minimum thermal output of the selected model shall be not less than 200 W at standard excess temperature.

On request of the manufacturer, lower thermal output can be tested and the deviation from the previous requirements shall be registered in the test report.

© ISO 2022 – All rights reserved

Documents
Document Sharing Hub
Full document details: BS ISO 24365:2022

4.2 Selection of models to be tested for determining the thermal outputs of a type

4.2.1 Selection of models to be tested when the variable characteristic dimension is the overall height and the cross-section of the variable part is constant

4.2.1.1 When a type includes only models of height 300 mm and greater, the models to be tested within that type shall be selected in accordance with 4.2.1.2, 4.2.1.3, 4.2.1.4 and 4.2.1.5.

If the type also includes heights below 300 mm, the minimum height below 300 mm shall be tested in addition to the above models.

For a type in which all heights are below 300 mm, only the minimum and the maximum height shall be tested.

4.2.1.2 The minimum number of models to be tested within a type is determined by the range of heights as shown in Table 2.

Table 2 — Minimum number of models to be tested

Range of heights (m) $H_r = H_{max} - H_{min}$	Number of models to be tested
≤ 1 m	3
> 1 m	4

4.2.1.3 The minimum length of finned coil of the models to be tested shall be 1 m or the closest to 1 m. For skirting convectors only, the finned coil length shall be the closest to 3 m. In the case of sectional radiators, having height H ≤ 1 m, the minimum number of sections shall be 10 or the minimum length 0,8 m. For sectional radiator having height greater than 1 m, the minimum length shall be 0,45 m.

For towel radiators see 4.2.2.

4.2.1.4 In the case of H_r ≤ 1 m, the models to be tested shall be three; the minimum and maximum height of the range and an intermediate height so that H_{int} is equal to or the closest value greater than:

$$H_{int} = H_{max} - \tfrac{1}{2} \times H_r$$

where H_{max} is the maximum height of the type.

4.2.1.5 In the case of 1 m < H_r ≤ 2,5 m, the models to be tested shall be four; the minimum and maximum height of the range and two intermediate heights so that H_{int1} and H_{int2} are the closest values respectively to:

$$H_{int1} = H_{max} - \tfrac{1}{3} \times H_r$$

and

$$H_{int\,2} = H_{max} - \tfrac{2}{3} \times H_r$$

© ISO 2022 – All rights reserved
Documents
Document Sharing Hub
Full document details: BS ISO 24365:2022

4.2.2 Selection of models to be tested when the variable characteristic dimension for the type is other than the overall height

4.2.2.1 General principle

The minimum number of models to be tested is three, having the same overall height and respectively, the minimum, intermediate and maximum value of the relevant characteristic dimension (see 4.2.1.4).

The measured values shall be used to determine the characteristic equation of the type.

For the equation to be valid, all the measured thermal outputs shall fall within ±2 % of the prediction of the equation.

If any value falls outside this range, the type shall be divided and new equations derived for each subset of the results.

4.2.2.2 Selection of models to be tested when a type includes horizontal parallel flow models

This procedure applies to tubular radiators classified as “towel or bathroom radiators”, according to Figure G.3.

If a type includes horizontal parallel flow models, with different heights and lengths, the thermal outputs of models having L_{min} and L_{max} respectively shall be tested. If there are more than three heights, the thermal output for all heating appliances having L_{min} and L_{max} respectively shall be established using the respective characteristic equation. For each height, the thermal output for models having length included between L_{min} and L_{max} shall be linearly interpolated. The adopted procedure shall be noted in the test report.

4.2.2.3 Straight or curved towel or bathroom radiator

For “towels and bathroom radiators” having similar external size (height, length, external diameter of the tubes) and different shape of horizontal tube (straight or curved):

If it is proved by at least two tests that the difference between the thermal outputs of the model having straight tubes and the model having curved tubes, is within ±4,0 %, then the catalogue data of the models having curved tubes can be assumed equal to the equivalent models having straight tubes.

If the difference exceeds ±4,0 % the models are classified as a different type and tested for any specific geometry.

4.2.2.4 Towel and bathroom radiator water circulation

For “towel and bathroom radiators” having the same external size (height, length, depth and external diameter of the tube), but different internal circulation of the hot water, if it is proved by at least two tests that the difference between the thermal outputs of the models having different internal circulation is within ±4,0 %, then the catalogue data of all the models can be assumed to be equal. If the difference exceeds ±4,0 % the models are classified as different type and so tested for any specific internal water circulation.

4.2.2.5 Different surface treatments (chromed, polished)

Models having the same external size (height, length, depth and external diameter of the tube), but different surface treatment (i.e. painted, chromed or mechanically polished), shall be tested as follows:

a) Models painted and chromed shall be tested according to 4.2;

© ISO 2022 – All rights reserved

Documents
Document Sharing Hub
Full document details: BS ISO 24365:2022

b) For models having other surface treatments (e.g. satinated or polished) the minimum number of samples to be tested shall be defined as follows:

   1) for each other type, two models, having the minimum and the maximum heat output as measured on painted model, shall be tested only to determine the less favourable reduction coefficient;

   2) the thermal output of all the models shall be calculated using the reduction coefficient determined according to 1).

4.2.2.6 Influence of water flow rate on thermal output

On request of manufacturers, the influence of water flow rate on thermal output shall be verified.

In this case, additional characteristics shall be tested, setting half and double standard mass flow.

4.3 Testing samples submission and identification

4.3.1 On initial application for the testing of a family of heating appliances, or of a type within a family, heating appliance samples and product drawings shall be submitted to the testing laboratory.

Product drawings shall be submitted by the manufacturer.

4.3.2 The product drawings shall:

— show all dimensions and features having an influence on the heat emission, including the detail of welds or other assembly methods used;

— state the type of material and the nominal material thicknesses of wet or dry surfaces, with the thickness tolerances, and type of paint;

— be identified by the drawing number and the date of revision.

4.3.3 Before proceeding with the thermal output testing, the laboratory shall identify the appliance against the drawing and shall note conformity of the sample with the drawing in respect of:

— dimensional tolerances given in Table 3;

— material thickness tolerances of convective surfaces, shown on the product drawings.

The laboratory shall also measure the mass and the water content of the sample models. The relevant values shall be reported in the test report.

The models for test shall be selected as specified in 4.2.

4.3.4 Samples of heating appliances already in production shall be taken from the production line or manufacturer's stock by the laboratory or its authorized representative.

Samples of prototype appliances shall be submitted by the manufacturer.

© ISO 2022 – All rights reserved
Documents
Document Sharing Hub
Full document details: BS ISO 24365:2022

Table 3 — Dimensional tolerances

Dimensions in millimetres or %

	Steel radiators				Cast iron	Extruded aluminium	Cast aluminium	Finned tube convectors	
Overall height[a] of heat exchanger	Panel radiators	Tubular	Sectional	Lamellar	(per section)	(per section)	(per section)		
***H* ≤ 250**	+ 4 / − 2	+ 4 / − 2	±2	+ 4 / − 2	±3,0	±2,5	±2,5	Height of casing (HC)	+ 4 / − 2
250 < *H* ≤ 500					±3,5				
500 < *H* ≤ 600					±4,0				
600 < *H* ≤ 900	+ 5 / − 2	+ 5 / − 2	±2	+ 5 / − 2					+ 5 / − 2
900 < *H*	+ 6 / − 2	+ 6 / − 2	±2	+ 6 / − 2					+ 6 / − 2
Overall depth of heat exchanger								Depth of casing (DC)	+ 4 / −3
All measures	+ 4 / − 3	±1,5	±2		±2	±0,65	+ 0 / − 1		
***D* ≤ 100**				±2					
100 < *D*				±3					
Curved models		±5	±5						
All measures		±1,5 %	±1,5 %	±1,5 %	±1,5 %	±0,65	±0,2		
***L* ≤ 1 000**	±5							Length of casing (LC)	±5
1 000 < *L*	±0,5 %								±0,5 %
Height of convector surfaces	+ 3 / − 1,5		+ 3 / − 1,5		+ 3 / − 1,5	+ 0,2 / − 0	+ 0,2 / − 0,8	Height of fins (HF)	±1
Depth of convector surfaces	±1,5		±2		±1,5	+ 0,2 / − 0	+ 0,2 / − 0,8	Depth of fins (DF)	±1,5
Distance between connection centre			±0,5		±0,5	+ 0 / − 1,2	+ 0,8 / − 1,2		±2
Material thickness of convectors	±0,06	±0,06						Material thickness of fins (TF)	±0,05
								Number of fins (NF)	±5 %
								Finned length	±5 %
								Distance casing to fins (TA)	±5

[a] For tubular radiators, height refers to the dimension across header sections regardless of orientation of wall mountings.

© ISO 2022 – All rights reserved

Full document details: BS ISO 24365:2022

Documents Document Sharing Hub

Table 3 *(continued)*

	Steel radiators				Cast iron (per section)	Extruded aluminium (per section)	Cast aluminium (per section)	Finned tube convectors
Overall height[a] of heat exchanger	Panel radiators	Tubular	Sectional	Lamellar				Distance casing to fins (BA)
								±5

a For tubular radiators, height refers to the dimension across header sections regardless of orientation of wall mountings.

© ISO 2022 – All rights reserved

Documents
Document Sharing Hub

Full document details: BS ISO 24365:2022

4.4 Supplementary test

Upon manufacturer's request, minor technical modifications can be investigated.

The testing laboratory investigates the effect of the change on heat output.

If the supplementary test reveals a deviation within ±4,0 % of the measured standard rated thermal output, the manufacturer can declare the old value of the standard thermal output.

If the difference exceeds ±4,0 % the models are classified as a different type in accordance with 4.2.

The findings of the supplementary test shall be demonstrated as follows:

— in the case of an assessment based on a visual check: by a written confirmation with the reference to the new drawing submitted by the manufacturer;

— in the case of measurements: by a complete test report.

5 Laboratory equipment and test methods

5.1 Principle

The aim of the test is to determine the standard thermal outputs of the heating appliance using its standard characteristic equation, which shall be obtained according to 5.4.5.

5.2 Apparatus

5.2.1 Test system

For the purposes of this document, a test system shall consist of:

a) a test installation;

b) a set of three master radiators built according to 5.2.3.

For the purposes of this document, test installations are classified as reference and approved.

5.2.2 Reference test installation

5.2.2.1 General

The reference test installation shall contain the following equipment:

a) a closed unventilated booth, comprising the test space within which the heating appliance under test shall be installed, equipped with water cooled surfaces to maintain specific thermal conditions independent of the external ambient, built according to 5.2.2.2;

b) apparatus for cooling the water circulating in the walls of the closed booth;

c) a primary heating circuit feeding the appliance under test, built in accordance with 5.4;

d) measuring and checking instruments in accordance with the requirements of 5.2.5 and 5.2.6.

© ISO 2022 – All rights reserved

Documents
Document Sharing Hub
Full document details: BS ISO 24365:2022

5.2.2.2 Reference test booth

5.2.2.2.1 Test booth dimensions

The test booth shall have the following internal dimensions:

— length: (4 ± 0,02) m;

— width: (4 ± 0,02) m;

— height: (3 ± 0,02) m.

5.2.2.2.2 Test booth construction

The test booth shall be constructed with sandwich panels cooled by water (see Figure 1). The internal surface of the booth shall be smooth and made from flat sheets of steel. The sandwich panels (see Figure 1 and Figure 2) are made up of:

— a steel panel, water cooled;

— insulating foam injected between the steel panel and an external steel sheet, to form a single self-supporting body;

— an external steel sheet, 0,6 mm nominal thickness.

The steel water cooled panels (see Figure 3) are made up of two sheets welded together:

— one flat having 2 mm thickness;

— the other of 1 mm thickness having undulating shape to form waterways with a cross-section approximately 150 mm^2.

The thickness of the insulating foam layer shall be 80 mm. The minimum overall thermal resistance of each wall, floor and ceiling shall be 2,5 m^2 K/W. The wall behind the appliance under test is made by the same sandwich panels but it is disconnected from the cooling system (the steel panels are empty). The inside surfaces of the test booth shall be covered with a dull paint having an emissivity of at least 0,9. The panels are assembled so that the structure of the test booth is self-supporting, without thermal bridges (see Figure 4). The connections of the cooling panels to the circuit are made following a three-pipe circuit scheme (see Figure 5). The holes allowing water and electric connections with the outside of the test booth are provided with devices for air tightness.

5.2.2.2.3 Tightness of the test booth

The test booth construction shall be sufficiently tight to prevent uncontrolled air infiltration.

5.2.2.2.4 Cooling system

The water-cooling system shall be designed in such a manner that at the highest admissible output of the testing appliance, the temperature difference occurring on the cooled internal surfaces of the test booth will not be more than ±0,5 K compared with the average temperature of all cooled surfaces. In order to ensure this, each panel shall be supplied with a flow rate of at least 80 kg/h per m^2 of internal surface. This condition is a pre-requisite for operating the test booth.

During the tests the average temperature of the cooled internal surface shall be regulated so that the reference air temperature will be (20 ± 0,5) °C and will conform to steady-state conditions.

The surface average temperature is the mean of the inlet and outlet water temperatures of the relevant surface.

© ISO 2022 – All rights reserved
Documents
Document Sharing Hub
Full document details: BS ISO 24365:2022

5.2.2.3 Measurements in the booth

5.2.2.3.1 Temperature measurements in the booth

Temperature measurements shall be made in the booth:

— to determine the reference room temperature;

— to monitor the thermal state of the test installation.

5.2.2.3.2 Air temperature measuring points

On the central vertical axis of the booth:

a) at the reference air temperature point 0,75 m from the floor,

b) at the following additional points:

1) 0,05 m from the floor,

2) 1,50 m from the floor,

3) 0,05 m from the ceiling.

Dimensions in millimetres

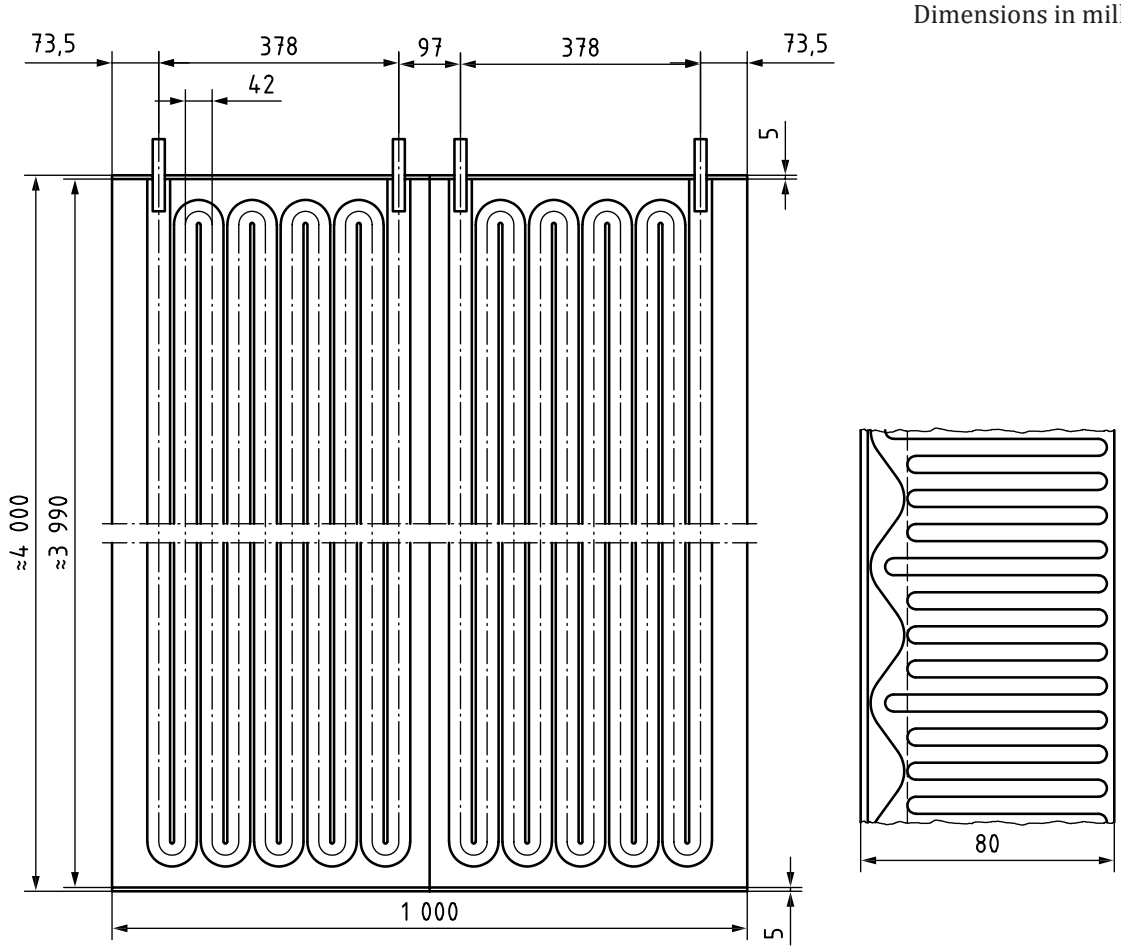

Figure 1 — Sandwich panel cooled by water

© ISO 2022 – All rights reserved

Documents
Document Sharing Hub
Full document details: BS ISO 24365:2022

5.2.2.3.3 Temperatures of the internal surfaces

On the back beside wall apart from the central point, a point on the centre axis at 0,5 m from the floor.

The surface temperatures (excluding those of the wall behind the heating appliance) shall be maintained within a ±0,3 K spread.

5.2.2.3.4 Other measurements

Air pressure.

5.2.3 Master radiators

5.2.3.1 General

The purposes of the master radiators are the following:

a) to verify that the reproducibility of test values among test installations is within the limits set by this document;

b) to verify that reference and approved test installations give test results within the limits set by this document;

c) to establish a common basis for all test installations in verifying that the repeatability of test values in each laboratory is within the limits set by this document.

To verify the reproducibility among test installations built to the present document, a single set of master radiators constructed and verified according to this document will be circulated among reference test installations to determine the respective Φ_0 and Φ_M values (see 5.2.4.3.3).

This single set of master radiators is named “primary set”. Each laboratory shall equip itself with a set of master radiators constructed and verified to this document. This set, named “secondary set”, shall be used to verify the repeatability of the test installation. The secondary set of one reference test booth, shall be used to verify the reproducibility of approved test installations.

© ISO 2022 – All rights reserved
Documents
Document Sharing Hub
Full document details: BS ISO 24365:2022

Dimensions in millimetres

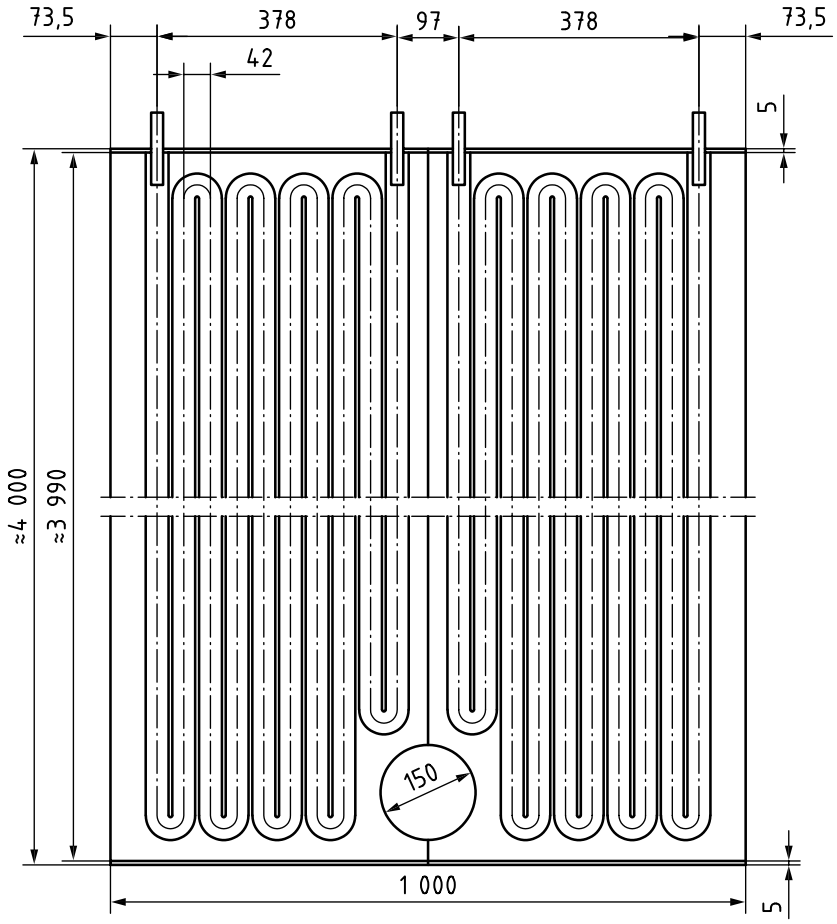

Figure 2 — Sandwich panel cooled by water with hole for external connections

Dimensions in millimetres

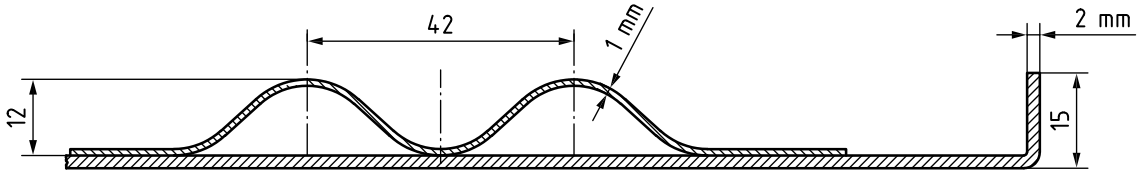

Figure 3 — Steel water cooled panel cross-section

© ISO 2022 – All rights reserved

Documents
Document Sharing Hub
Full document details: BS ISO 24365:2022