BS ISO 24578:2021

BSI Standards Publication

Hydrometry — Acoustic Doppler profiler — Method and application for measurement of flow in open channels from a moving boat

Documents
Document Sharing Hub

Full document details: BS ISO 24578:2021

National foreword

This British Standard is the UK implementation of ISO 24578:2021. It supersedes PD ISO/TR 24578:2012, which is withdrawn.

The UK participation in its preparation was entrusted to Technical Committee CPI/113/1, Hydrometric methods and instrumentation.

A list of organizations represented on this committee can be obtained on request to its committee manager.

This publication does not purport to include all the necessary provisions of a contract. Users are responsible for its correct application.

© The British Standards Institution 2021
Published by BSI Standards Limited 2021

ISBN 978 0 580 94349 2

ICS 17.120.20

Compliance with a British Standard cannot confer immunity from legal obligations.

This British Standard was published under the authority of the Standards Policy and Strategy Committee on 31 March 2021.

Amendments/corrigenda issued since publication

Date	Text affected

Documents
Document Sharing Hub

Full document details: BS ISO 24578:2021

INTERNATIONAL STANDARD

ISO 24578

First edition
2021-03

Hydrometry — Acoustic Doppler profiler — Method and application for measurement of flow in open channels from a moving boat

Hydrométrie — Profileurs acoustiques à effet Doppler — Méthode et application pour le mesurage de l'écoulement à surface libre sur un bateau mobile

Reference number
ISO 24578:2021(E)

Documents
Document Sharing Hub

© ISO 2021

Full document details: BS ISO 24578:2021

COPYRIGHT PROTECTED DOCUMENT

© ISO 2021

All rights reserved. Unless otherwise specified, or required in the context of its implementation, no part of this publication may be reproduced or utilized otherwise in any form or by any means, electronic or mechanical, including photocopying, or posting on the internet or an intranet, without prior written permission. Permission can be requested from either ISO at the address below or ISO's member body in the country of the requester.

ISO copyright office
CP 401 • Ch. de Blandonnet 8
CH-1214 Vernier, Geneva
Phone: +41 22 749 01 11
Email: copyright@iso.org
Website: www.iso.org

Published in Switzerland

© ISO 2021 – All rights reserved

Documents
Document Sharing Hub

Full document details: BS ISO 24578:2021

Contents

Page

Foreword ... **v**
Introduction ... **vi**
1 Scope ... **1**
2 Normative references ... **1**
3 Terms and definitions ... **1**
4 Principles of the boat mounted ADCP method ... **3**
4.1 General ... 3
4.2 Doppler principle applied to moving objects ... 4
4.3 Acoustic Doppler current profiler techniques ... 5
4.3.1 General ... 5
4.3.2 Pulse incoherent ... 5
4.3.3 Pulse-to-pulse coherent ... 6
4.3.4 Broadband (Spread spectrum) ... 6
4.4 Measurement of velocity profile ... 6
4.4.1 General ... 6
4.4.2 Measurement of relative velocity ... 6
4.4.3 Measurement of boat velocity ... 6
4.4.4 Near boundary data collection ... 8
4.5 Speed of sound in water ... 10
5 Flow determination ... **11**
5.1 General method ... 11
5.2 Measurement procedure ... 13
5.3 Method dealing with moving-bed condition without GNSS system ... 15
5.3.1 General ... 15
5.3.2 Stationary moving-bed method ... 15
5.3.3 Azimuth method ... 16
5.3.4 Subsection correction method ... 16
5.3.5 Loop method ... 17
5.3.6 Mid-section method ... 19
6 Site selection ... **19**
6.1 General ... 19
6.2 Site-selection criteria ... 20
7 ADCP Deployment procedure ... **21**
7.1 Deployment techniques ... 21
7.1.1 General ... 21
7.1.2 Manned boat mounted ... 21
7.1.3 Tethered boat ... 21
7.1.4 Deployment on a remote-control craft ... 22
7.1.5 Data retrieval modes ... 22
7.2 Operation of boat ... 22
7.2.1 Boat path ... 22
7.2.2 Boat speed ... 23
7.3 Field procedures ... 23
7.3.1 Pre-field procedures ... 23
7.3.2 Field setup ... 23
7.3.3 Reviewing ADCP data during measurement ... 26
7.3.4 Post measurement requirements ... 26
7.4 Ancillary equipment ... 27
7.5 Other consideration ... 27
7.5.1 Edge distances ... 27
7.5.2 Depth measurements at sites with high sediment concentrations ... 27
7.5.3 GNSS compass ... 28

AVA Documents
Document Sharing Hub

© ISO 2021 – All rights reserved

Full document details: BS ISO 24578:2021

7.6 Maintenance and ADCP checks ... 28
7.6.1 General ... 28
7.6.2 Built-in diagnostic check ... 28
7.6.3 Periodic major service in the manufacturer ... 28
7.6.4 Periodic ADCP performance check ... 28
7.6.5 Physical maintenance ... 28
7.6.6 Beam-alignment test ... 28
7.7 Training ... 29

8 Uncertainty ... 29
8.1 General ... 29
8.2 Definition of uncertainty ... 29
8.3 Uncertainties in ADCP measurements — General considerations ... 30
8.4 Sources of uncertainty ... 30
8.5 Minimizing uncertainties ... 31

Annex A (informative) **Velocity distribution theory and the extrapolation of velocity profiles ... 32**

Annex B (informative) **Determination of edge discharges ... 34**

Annex C (informative) **Example of an equipment check list ... 36**

Annex D (informative) **Example of ADCP gauging field sheets ... 38**

Annex E (informative) **Beam alignment test ... 42**

Annex F (informative) **Uncertainty evaluation methods ... 44**

Bibliography ... 45

© ISO 2021 – All rights reserved

Documents
Document Sharing Hub
Full document details: BS ISO 24578:2021

Foreword

ISO (the International Organization for Standardization) is a worldwide federation of national standards bodies (ISO member bodies). The work of preparing International Standards is normally carried out through ISO technical committees. Each member body interested in a subject for which a technical committee has been established has the right to be represented on that committee. International organizations, governmental and non-governmental, in liaison with ISO, also take part in the work. ISO collaborates closely with the International Electrotechnical Commission (IEC) on all matters of electrotechnical standardization.

The procedures used to develop this document and those intended for its further maintenance are described in the ISO/IEC Directives, Part 1. In particular, the different approval criteria needed for the different types of ISO documents should be noted. This document was drafted in accordance with the editorial rules of the ISO/IEC Directives, Part 2 (see www.iso.org/directives).

Attention is drawn to the possibility that some of the elements of this document may be the subject of patent rights. ISO shall not be held responsible for identifying any or all such patent rights. Details of any patent rights identified during the development of the document will be in the Introduction and/or on the ISO list of patent declarations received (see www.iso.org/patents).

Any trade name used in this document is information given for the convenience of users and does not constitute an endorsement.

For an explanation of the voluntary nature of standards, the meaning of ISO specific terms and expressions related to conformity assessment, as well as information about ISO's adherence to the World Trade Organization (WTO) principles in the Technical Barriers to Trade (TBT), see www.iso.org/iso/foreword.html.

This document was prepared by Technical Committee ISO/TC 113 *Hydrometry*, Subcommittee SC 1 *Velocity area methods*.

This first edition of ISO 24578 cancels and replaces ISO/TR 24578:2021, which has been technically revised.

The main changes compared to the previous edition are as follows:

— the title has been modified to read "Hydrometry — Acoustic Doppler profiler — Method and application for measurement of flow in open channels from a moving boat".

Any feedback or questions on this document should be directed to the user's national standards body. A complete listing of these bodies can be found at www.iso.org/members.html.

© ISO 2021 – All rights reserved

Documents
Document Sharing Hub
Full document details: BS ISO 24578:2021

Introduction

The term acoustic Doppler current profilers (ADCP) has been adopted as a generic term for a technology that is manufactured by various companies worldwide. They are also called acoustic Doppler velocity profilers (ADVPs) or acoustic Doppler profilers (ADPs).

To use this document effectively, it is essential that users are familiar with the terminology and functions of their own ADCP equipment. Users should also be familiar with additional requirements.

© ISO 2021 – All rights reserved
Documents
Document Sharing Hub
Full document details: BS ISO 24578:2021

Hydrometry — Acoustic Doppler profiler — Method and application for measurement of flow in open channels from a moving boat

1 Scope

This document gives guidelines for the use of boat-mounted acoustic Doppler current profilers (ADCPs) for determining flow in open channels. It describes a number of methods of deploying ADCPs to determine flow. Although, in some cases, these measurements are intended to determine the stage-discharge relationship of a gauging station, this document deals only with single determination of discharge.

ADCPs can be used to measure a variety of parameters, such as current or stream flow, water velocity fields, and channel bathymetry. As a potential application, an idea of bedload discharge can be obtained applying the bottom track velocity, while suspended sediment flow can be obtained applying the acoustic backscatter and the sonar equation. This document is generic in form and contains no operational details specific to particular ADCP makes and models.

2 Normative references

The following documents are referred to in the text in such a way that some or all of their content constitutes requirements of this document. For dated references, only the edition cited applies. For undated references, the latest edition of the referenced document (including any amendments) applies.

ISO 772, *Hydrometry — Vocabulary and symbols*

3 Terms and definitions

For the purposes of this document, the terms and definitions given in ISO 772 and the following apply.

ISO and IEC maintain terminological databases for use in standardization at the following addresses:

— ISO Online browsing platform: available at https://www.iso.org/obp

— IEC Electropedia: available at http://www.electropedia.org/

3.1
transducer depth
ADCP depth
draft
depth of the ADCP transducers below the water surface during *deployment* (3.6)

Note 1 to entry: The ADCP depth should be measured manually.

3.2
bin
depth cell
truncated cone-shaped volume of water at a known distance and orientation from the transducers

Note 1 to entry: The ADCP determines an estimated velocity for each cell using a centre-weighted averaging scheme, which takes account of the water not only in the bin itself but also in the two adjacent bins.

© ISO 2021 – All rights reserved

Documents
Document Sharing Hub
Full document details: BS ISO 24578:2021

3.3
blanking distance
blank
distance travelled by the signal when the vibration of the transducer during transmission prevents the transducer from receiving echoes or return signals

Note 1 to entry: This is the distance immediately below the ACDP transducers in which no measurement is taken.

Note 2 to entry: The distance should be the minimum possible. However, care should be taken not to make the distance too short in order to avoid signal contamination by ringing or bias due to flow disturbance.

3.4
bottom tracking
acoustic method used to measure boat speed and direction by computing the Doppler shift of sound reflected from the stream bed relative to the ADCP

Note 1 to entry: With no moving bed, the discharge can be computed with bottom velocity and water velocity data because this is done in ADCP coordinates not earth coordinates. With moving bed, the use of a Global Navigation Satellite System (GNSS) or loop-corrected data using a calibrated compass is required.

3.5
real-time mode
mode in which the ADCP relays information to the operating computer as it gathers it

Note 1 to entry: The ADCP and computer are connected (physically or wireless) throughout the *deployment* (3.6) in this mode.

3.6
deployment
ADCP initialized and activated to collect data while the ADCP is propelled across the section to record data

Note 1 to entry: A deployment typically includes several pairs of *transects* (3.11) or traverses across a river or estuary.

3.7
deployment method
technique used to propel the ADCP across a watercourse

Note 1 to entry: One of three different deployment methods is used: a manned boat; a tethered boat; or a remote-controlled boat.

3.8
ensemble
profile
single measurement of the water column

Note 1 to entry: A column of *bins* (3.2) is equivalent to a vertical in conventional current meter gauging.

3.9
ping
entirety of the sound generated by an ADCP transducer for a single measurement cycle

Note 1 to entry: Sound pulses transmitted by the ADCP for a single measurement.

3.10
self-contained mode
autonomous mode
data retrieval mode in which the ADCP stores the information it gathers within its own memory and then downloaded to a computer after *deployment* (3.6)

Note 1 to entry: This method is generally not used by majority of ADCP practitioners nor recommended by the majority of hydrometric practitioners.

© ISO 2021 – All rights reserved
Documents
Document Sharing Hub
Full document details: BS ISO 24578:2021

3.11
transect
pass
one sweep across the watercourse during an ADCP *deployment* (3.6)

Note 1 to entry: In the *self-contained mode* (3.10), a deployment can consist of any number of transects.

4 Principles of the boat mounted ADCP method

4.1 General

The ADCP is a device for measuring current velocity and direction, throughout the water column, in an efficient and non-intrusive manner. It can produce an instantaneous velocity profile through the water column while disturbing only the top few decimetres. ADCPs nominally work using the Doppler principle (see 4.2). An ADCP is usually a cylinder with a transducer head on the end (see Figure 1). The transducer head is typically a ring of three or more acoustic transducers with their faces angled to the horizontal and at specified angles to each other. Some ADCPs use phased array transducers, which contain many elements that can form multiple beams at various angles, depending on transducer design. A single phased array transducer can form the three or more beams needed for an ADCP.

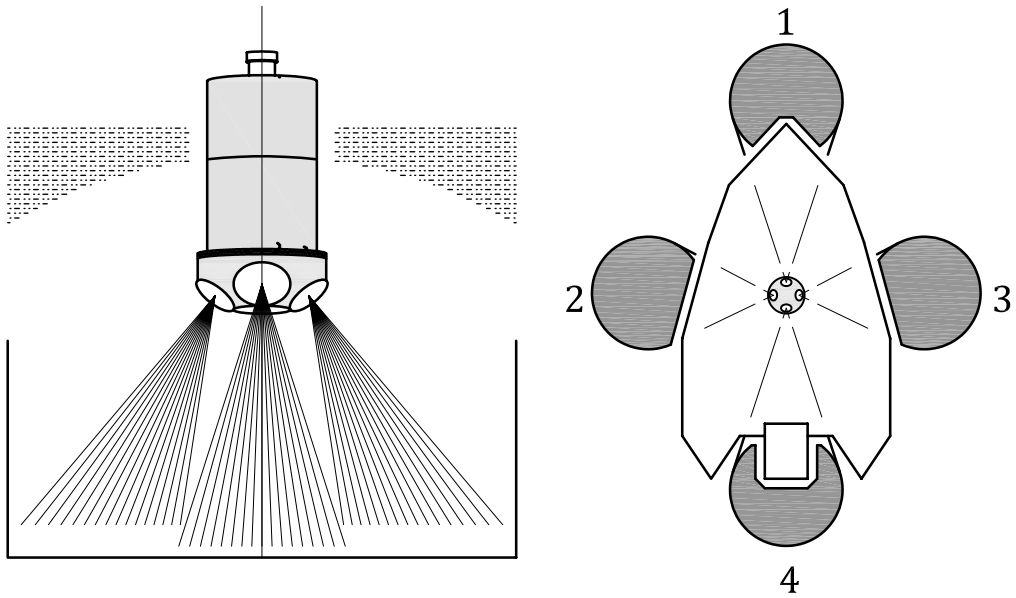

Key

1 forward
2 port or left
3 starboard or right
4 aft or backward

NOTE ADCP can work in any position or orientation; this figure is an indicative illustration.

Figure 1 — Example sketch illustrating typical ADCP with four transducers

The ADCP, which was originally developed for oceanographic work, has since been developed for use in estuaries and rivers. An ADCP can be mounted on a boat, flotation collar, or raft, and propelled across a river (see Figure 2). The ADCP collects velocity data, direction of flow, depth data, and boat speed, direction, and position. With such information, discharge values are independent of the path; in other words, the route taken does not need to be straight or perpendicular to the bank.

© ISO 2021 – All rights reserved

Documents
Document Sharing Hub
Full document details: BS ISO 24578:2021

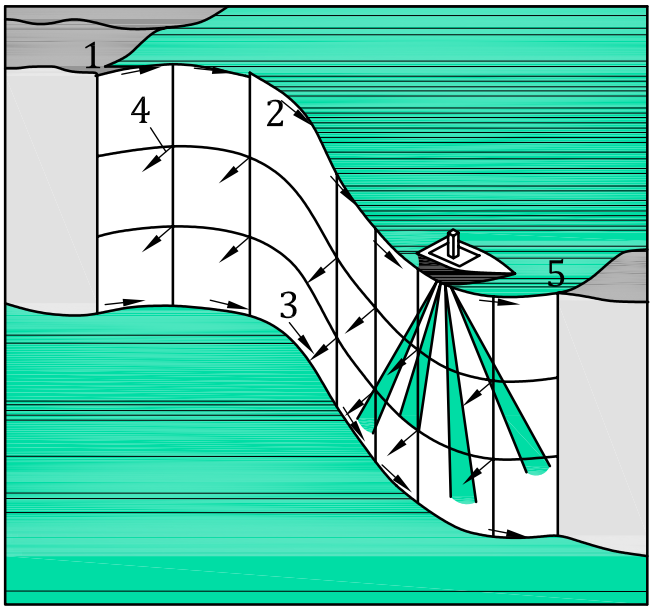

Key

1 start

2 path of boat

3 path of boat on river bottom

4 flow velocity vectors

5 finish

Figure 2 — Sketch illustrating moving — Boat ADCP deployment principles

4.2 Doppler principle applied to moving objects

The ADCP uses ultrasound to measure water velocity using a principle of physics discovered by Christian Doppler. The reflection of sound waves from a moving particle causes a change in frequency to the reflected sound wave. The difference in frequency between the transmitted and reflected sound wave is known as the Doppler shift (see Figure 3).

It should be noted that only the component of velocity parallel to the direction of the sound wave produces a Doppler shift. Thus, particles moving at right angles to the direction of the sound waves (i.e. with no velocity components in the direction of the sound wave) will not produce a Doppler shift.

© ISO 2021 – All rights reserved
Documents
Document Sharing Hub
Full document details: BS ISO 24578:2021

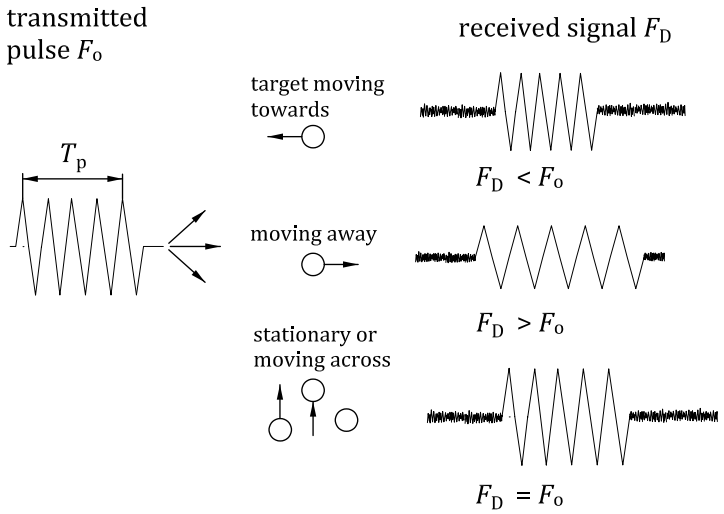

Figure 3 — Reflection of sound — Waves by a moving particle results in an apparent change in the frequency of those sound waves

Doppler's principle relates the change in frequency to the relative velocities of the source (reflector) and the observer. In the case of most ADCPs, the transmitted sound is reflected off particulates or air bubbles in the water column and reflected back to the transducer. It is assumed that the particulates move at the same velocity as the water and, from this, the frequency shift can be translated to a velocity magnitude and direction. The particulates in the river are generally suspended sediments (SS). A very low SS concentration results in no data because there is no return signal, while a very high SS disrupts the signal, and also results in no data. Therefore, ADCP frequency shall be chosen according to these criteria. The more suspended sediment that are in water, the lower the ADCP operating frequency should be. In addition to that, it should also be noted that excessive air bubbles can cause distortion in, or loss of, the returned signal. Furthermore, air bubbles naturally rise and therefore are likely not to be travelling in a representative magnitude and direction.

4.3 Acoustic Doppler current profiler techniques

4.3.1 General

There are three general types of ping configuration and processing algorithms used in ADCPs:

— pulse incoherent (including narrowband) — Doppler shift long pulse,

— pulse-to-pulse coherent — Doppler shift short pulse, and

— broad band (spread spectrum) — phase shift on two short pulses.

Reference should be made to the ADCP manual to determine the type being used.

4.3.2 Pulse incoherent

An incoherent ADCP transmits a single, relatively long, pulse of sound and measures the Doppler shift, which is used to calculate the velocity of the particles along the path of the acoustic beam. The velocity measurements made using incoherent processing are very robust over a large velocity range, although they have a relatively high short-term (single ping) uncertainty. To reduce the uncertainty, multiple pulses are transmitted over a short time period; these are then averaged before reporting a velocity. "Narrowband" is used in the industry to describe a pulse-to-pulse incoherent ADCP. In a narrowband ADCP, only one pulse is transmitted into the water per beam per measurement (ping), and the resolution of the Doppler shift shall take place during the duration of the received pulse. The narrowband acoustic pulse is a simple monochromatic wave and can be processed quickly.

© ISO 2021 – All rights reserved

Documents
Document Sharing Hub
Full document details: BS ISO 24578:2021

4.3.3 Pulse-to-pulse coherent

Coherent ADCP systems are the most accurate of the three, although they have significant range limitations. Coherent systems transmit one, relatively short pulse, record the return signal, and then transmit a second short pulse when the return from the first pulse is no longer detectable. The ADCP measures the phase difference between the two returns and uses this to calculate the Doppler shift. Velocity measurements made using coherent processing are very precise (low short-term uncertainties), but they have significant limitations. Coherent processing will work only in limited depth ranges and with a significantly limited maximum velocity. If these limitations are exceeded, velocity data from a coherent Doppler system are effectively meaningless.

4.3.4 Broadband (Spread spectrum)

Like coherent systems, broadband ADCP systems transmit two pulses and look at the phase change of the return from successive pulses. However, with broadband systems, both acoustic pulses are within the profiling range at the same time. The broadband acoustic pulse is complex; it has a code superimposed on the waveform. The code is imposed on the wave form by reversing the phase and creating a pseudo-random code within the wave form. This pseudo-random code allows a number of independent samples to be collected from a single ping. Due to the complexity of the pulse, the processing is slower than in a narrowband system; however, multiple independent samples are obtained from each ping.

The short-term uncertainty of velocity measurements using broadband processing is between that of incoherent and coherent systems. Broadband systems are capable of measuring over a wider velocity range than coherent systems; although, if this range is exceeded, the velocity data will be rendered meaningless. The accuracy and maximum velocity range of a broadband system is a function of the precise processing configuration used.

4.4 Measurement of velocity profile

4.4.1 General

ADCPs measure velocity profiles relative to the ADCP. In order to obtain an absolute velocity profile, a combination of relative velocity and boat velocity are necessary.

4.4.2 Measurement of relative velocity

The velocity is measured as a centre-weighted average that spans the cells above and below as described in 4.3 and the result is reported at the depth of the cell centre. With these results and using trigonometric relations, a 3-dimensional water velocity is computed and assigned to a given depth cell in the water column. Although this is analogous to a velocity profile obtained from a point velocity meter, the entire measurable region of the water column is sampled by the ADCP. Acoustic pulse requires to be stabilized, in order to obtain data. The blanking distance exits in order for acoustic pulse to stabilize (see Figure 4).

4.4.3 Measurement of boat velocity

4.4.3.1 Bottom tracking

The ADCP can use the Doppler principle to track their movements across a channel using a technique called “bottom tracking”. Bottom-tracking measurements are similar to water-velocity measurements, but separate pulses are used. Bottom-tracking pings are longer than water pings. These pings are also used to measure the depth of water. The sound pulses are reflected from the stream bed and used to calculate the velocity of the ADCP relative to the bed. ADCPs may also have an on-board compass and can combine this data with bottom-tracking data to determine boat direction and speed assuming the stream bed is stable.

In order to conduct the water and bottom tracking measurements, first, the ADCP sends a pulse to measure the boat velocity which is just the opposite of bottom velocity relative to the ADCP. Second,

© ISO 2021 – All rights reserved
AVA Documents Document Sharing Hub
Full document details: BS ISO 24578:2021

the ADCP sends a pulse to measure water velocity relative to the ADCP. Third, the ADCP combines these two velocity vectors (water and boat) to compute the absolute water velocity. To do this with accuracy, two conditions shall be met.

a) The stream bed should not move, otherwise the water velocity can be under estimated. In this case, Global Navigation Satellite System (GNSS) should be implemented or special treatments shall be taken care as described in 5.3.

b) The boat should not move or rotate between the pulse for bottom velocity and the pulse for water velocity. Otherwise, there is an angle error between the velocity water vector and the boat velocity vector.

To ensure that these conditions are met:

1) test for a moving stream bed using a stationary method, loop test, or GNSS;

2) deployment of boat has to be smooth and even, and slow relative to the water velocity.

4.4.3.2 Global Navigation Satellite System (GNSS)

A GNSS may be integrated with an ADCP to provide position and boat velocity data. This is used as an alternative to bottom tracking when the bed is unstable due to high bedload discharge or when bottom tracking is unable to accurately determine bed level due, for example, to vegetation growth or heavy suspended sediments. It is important to implement the most accurate GNSS system available to users. The accuracy of the GNSS may be affected by trees or buildings on the river bank on narrow rivers. When GNSS can only sight four or less satellites at one time, the accuracy of the ADCP is reduced considerably. The GNSS system should warn the user when this occurs.

© ISO 2021 – All rights reserved

Documents
Document Sharing Hub
Full document details: BS ISO 24578:2021

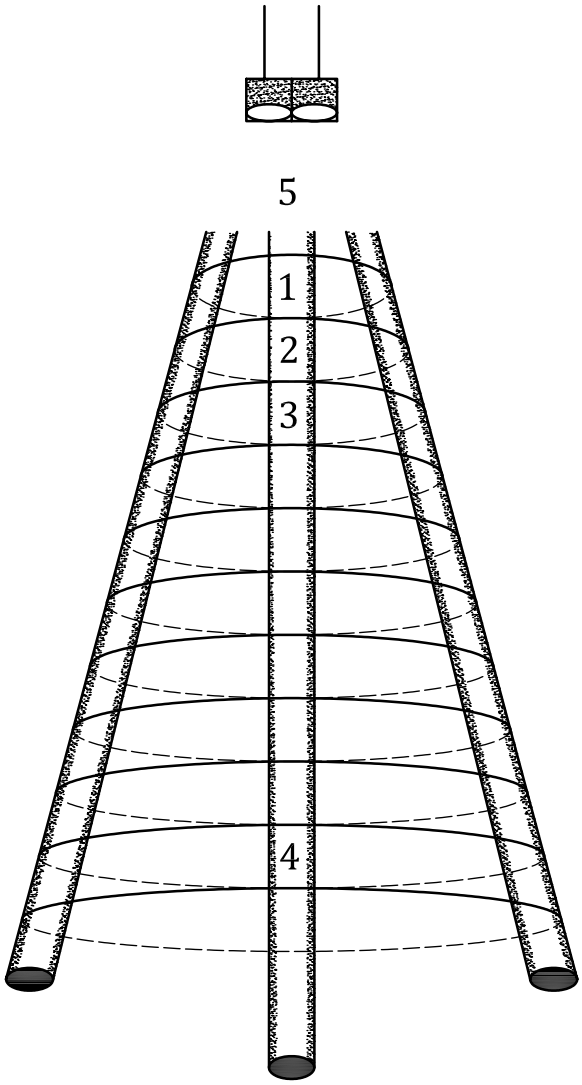

Key

1 cell/bin 1
2 cell/bin 2
3 cell/bin 3
4 cell/bin n
5 blanking distance

Figure 4 — ADCP depth cells or bins

4.4.4 Near boundary data collection

The angle of the ADCP transducers varies depending on the manufacturer and type. It typically ranges between 20° and 30° from the vertical. The ADCP cannot measure all the way to the stream bed. When acoustic transducers produce sound, most of the energy is transmitted in the main beam. However, there are also side lobes that contain less energy that propagate from the transducer as well. These side lobes do not pose a problem in most of the water column because they emit low energy. However, when the side lobe strikes the stream bed, the stream bed is a good reflector of this acoustic energy, and much of the energy is reflected back to the transducer. Due to the slant of the beams, the acoustic energy in the main beam reflects off scatterers in the water column near the bed at the same time that a vertical side lobe reflects from the stream bed. The energy in the main beam reflected from these scatterers in the water column is relatively low compared to the energy in the side lobe returned from the stream bed, which may contaminate the velocity measurement near the bed. Therefore there is an

© ISO 2021 – All rights reserved
Documents
Document Sharing Hub
Full document details: BS ISO 24578:2021

area near the bottom that cannot be measured due to side-lobe interference. This distance is computed as shown in Formula (1):

$$[1 - \cos(\theta)] \times 100 \quad (1)$$

where θ is beam angle.

Thus, for a 20°system, it is 6 % of the range from the transducer. As the profile approaches the boundary, interference occurs due to reflection of side-lobe energy taking a direct (shorter) path to the boundary (see Figure 5).

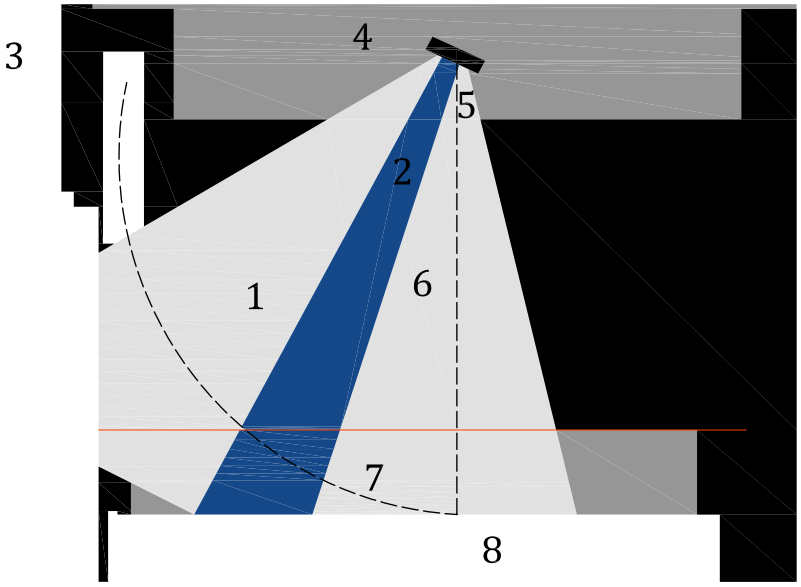

Key

1 side lobe
2 main beam
3 maximum slant range
4 depth of sensor and draft of boat
5 blanking distance
6 depth of measured discharge
7 side-lobe interference
8 stream bed

Figure 5 — Depth zones within the water column

To ensure that there is no bias in the velocity estimate, the ADCP and its software should ignore that portion of the water column affected by side-lobe contamination near the bed. This is undertaken automatically by the ADCPs in current use. The user manual should provide information on this.

To measure the velocity at a precise depth, it is necessary to have a reliable measurement on three beams at this depth. Any data beyond the range of the shortest beam is suspect because it may be contaminated by reflections from the boundary of the shortest beam. Only data above the shortest beam should be used.

As illustrated in Figure 6, the ADCP is unable to make velocity measurements in three areas:

— near the surface (due to the depth at which the ADCP is located in the water and, added to this, the blanking distance);

© ISO 2021 – All rights reserved

Documents
Document Sharing Hub
Full document details: BS ISO 24578:2021

— near the bed (due to side lobe interference, channel undulations and acoustic reflections caused at the bed);

— near the channel edges (due to a lack of sufficient water depth or to acoustic interference from signals returned from the bank).

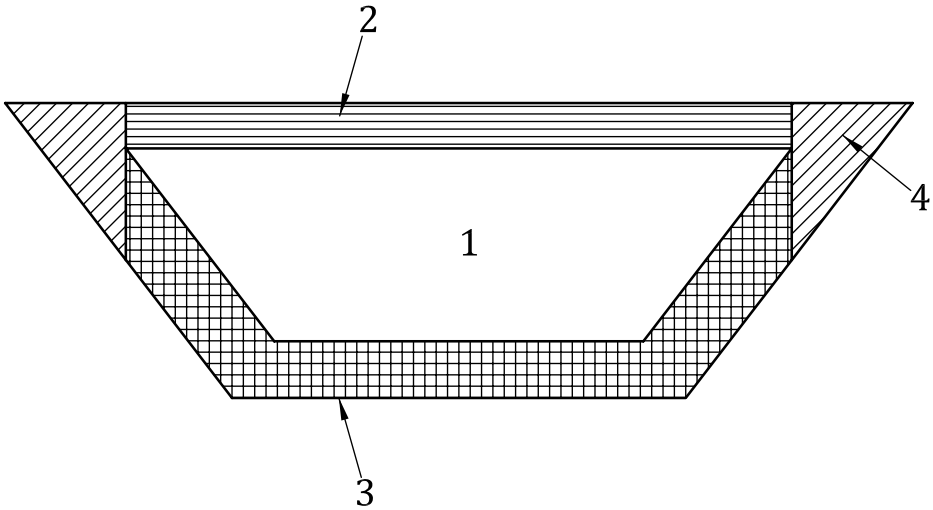

Key

1 measured area

2 near the surface as unmeasured area

3 near the bed as unmeasured area

4 edge as unmeasured area

NOTE Velocity is only measured in the central area, elsewhere it is estimated by extrapolation.

Figure 6 — Measured and un-measured area

4.5 Speed of sound in water

The calculated velocity is directly related to the speed of sound in the water. The speed of sound varies significantly with changes in pressure, water temperature, and salinity, but is most sensitive to changes in water temperature. Most manufacturers of ADCP systems measure water temperature near the transducer faces and apply correction factors to allow for temperature related differences in the speed of sound. Temperature changes that occur with depth do not affect the horizontal velocity but will affect the measured depth. If ADCPs do not have temperature compensation facilities, user should avoid to use it, or the user shall measure the water temperature with a thermometer or another sensor at the time of the ADCP data collection.

NOTE 1 In most well-mixed rivers, the temperature is the same or nearly the same from top to bottom.

NOTE 2 Most post-processing software can reprocess the data with a measured water temperature when the internal sensor malfunctions.

If the ADCP is to be used in waters of varying salinity, the software used to collect data should have the facility to correct for salinity.

© ISO 2021 – All rights reserved
Documents
Document Sharing Hub
Full document details: BS ISO 24578:2021