BS ISO 24647:2023

BSI Standards Publication

Non-destructive testing — Robotic ultrasonic test systems — General requirements

Documents
Document Sharing Hub

Full document details: BS ISO 24647:2023

National foreword

This British Standard is the UK implementation of ISO 24647:2023.

The UK participation in its preparation was entrusted to Technical Committee WEE/46/3, Ultrasonic Testing.

A list of organizations represented on this committee can be obtained on request to its committee manager.

Contractual and legal considerations

This publication has been prepared in good faith, however no representation, warranty, assurance or undertaking (express or implied) is or will be made, and no responsibility or liability is or will be accepted by BSI in relation to the adequacy, accuracy, completeness or reasonableness of this publication. All and any such responsibility and liability is expressly disclaimed to the full extent permitted by the law.

This publication is provided as is, and is to be used at the recipient's own risk.

The recipient is advised to consider seeking professional guidance with respect to its use of this publication.

This publication is not intended to constitute a contract. Users are responsible for its correct application.

© The British Standards Institution 2023
Published by BSI Standards Limited 2023

ISBN 978 0 539 12750 8

ICS 19.100

Compliance with a British Standard cannot confer immunity from legal obligations.

This British Standard was published under the authority of the Standards Policy and Strategy Committee on 28 February 2023.

Amendments/corrigenda issued since publication

Date	Text affected

Documents
Document Sharing Hub

Full document details: BS ISO 24647:2023

INTERNATIONAL STANDARD

ISO 24647

First edition
2023-02

Non-destructive testing — Robotic ultrasonic test systems — General requirements

Essais non destructifs — Systèmes robotisés de contrôle par ultrasons — Exigences générales

Reference number
ISO 24647:2023(E)

Documents
Document Sharing Hub

© ISO 2023

Full document details: BS ISO 24647:2023

COPYRIGHT PROTECTED DOCUMENT

© ISO 2023

All rights reserved. Unless otherwise specified, or required in the context of its implementation, no part of this publication may be reproduced or utilized otherwise in any form or by any means, electronic or mechanical, including photocopying, or posting on the internet or an intranet, without prior written permission. Permission can be requested from either ISO at the address below or ISO's member body in the country of the requester.

ISO copyright office
CP 401 • Ch. de Blandonnet 8
CH-1214 Vernier, Geneva
Phone: +41 22 749 01 11
Email: copyright@iso.org
Website: www.iso.org

Published in Switzerland

© ISO 2023 – All rights reserved

Documents
Document Sharing Hub

Full document details: BS ISO 24647:2023

Contents

Page

Foreword ... **v**

1 Scope ... **1**

2 Normative references ... **1**

3 Terms and definitions ... **1**

4 Requirements for test personnel ... **2**

5 Test system ... **2**
5.1 General ... 2
5.2 Design principles ... 3
5.3 Test equipment ... 3
5.3.1 Instrument ... 3
5.3.2 Probes ... 3
5.3.3 Robots ... 3
5.3.4 Couplant ... 4
5.4 Typical test systems ... 4
5.4.1 Single-robot test system ... 4
5.4.2 Twin-robot test system ... 6

6 Characteristics and requirements for robotic ultrasonic test systems ... **9**
6.1 General ... 9
6.2 Test technique ... 9
6.2.1 General ... 9
6.2.2 Pulse-echo technique ... 9
6.2.3 Trough-transmission technique ... 9
6.3 Planning of scan pattern and programming of robot motion control ... 9
6.3.1 General ... 9
6.3.2 Path planning method ... 9
6.3.3 Restrictions ... 12
6.4 Synchronisation of the acquisition of ultrasonic and position data ... 12
6.4.1 Synchronisation of ultrasonic signal and robot position ... 12
6.4.2 Synchronisation — Minimum requirements ... 12
6.4.3 Synchronisation — Optional requirements ... 13
6.5 Conditions for the application ... 13

7 Verification of the test system ... **13**
7.1 General ... 13
7.2 Ultrasonic instrument and probes ... 14
7.2.1 General ... 14
7.2.2 Single-probe systems ... 14
7.2.3 Multi-probe systems ... 14
7.2.4 Normalization of pulse-echo systems ... 14
7.2.5 Normalization of through-transmission systems ... 14
7.3 Robots ... 14
7.4 Synchronization ... 15
7.5 Complete system — Robots, instrument and probes combined ... 15
7.5.1 General ... 15
7.5.2 Signal-to-noise ratio ... 15
7.5.3 Image distortion coefficient ... 16
7.5.4 Detection sensitivity ... 16

8 Typical process of an automated test for a robotic ultrasonic test system ... **17**
8.1 Preparation ... 17
8.2 Probes ... 17
8.3 Trajectory planning ... 17
8.4 Setup of the scanning reference coordinate system ... 17
8.5 Test procedure ... 18

AVA Documents
Document Sharing Hub

© ISO 2023 – All rights reserved

Full document details: BS ISO 24647:2023

9 Documentation of the verification results **18**
Annex A (informative) **Trajectory planning** **19**
Annex B (informative) **Example of a verification report** **30**
Bibliography **34**

© ISO 2023 – All rights reserved
Documents
Document Sharing Hub
Full document details: BS ISO 24647:2023

Foreword

ISO (the International Organization for Standardization) is a worldwide federation of national standards bodies (ISO member bodies). The work of preparing International Standards is normally carried out through ISO technical committees. Each member body interested in a subject for which a technical committee has been established has the right to be represented on that committee. International organizations, governmental and non-governmental, in liaison with ISO, also take part in the work. ISO collaborates closely with the International Electrotechnical Commission (IEC) on all matters of electrotechnical standardization.

The procedures used to develop this document and those intended for its further maintenance are described in the ISO/IEC Directives, Part 1. In particular, the different approval criteria needed for the different types of ISO documents should be noted. This document was drafted in accordance with the editorial rules of the ISO/IEC Directives, Part 2 (see www.iso.org/directives).

Attention is drawn to the possibility that some of the elements of this document may be the subject of patent rights. ISO shall not be held responsible for identifying any or all such patent rights. Details of any patent rights identified during the development of the document will be in the Introduction and/or on the ISO list of patent declarations received (see www.iso.org/patents).

Any trade name used in this document is information given for the convenience of users and does not constitute an endorsement.

For an explanation of the voluntary nature of standards, the meaning of ISO specific terms and expressions related to conformity assessment, as well as information about ISO's adherence to the World Trade Organization (WTO) principles in the Technical Barriers to Trade (TBT), see www.iso.org/iso/foreword.html.

This document was prepared by Technical Committee ISO/TC 135, *Non-destructive testing*, Subcommittee SC 3, *Ultrasonic testing*.

Any feedback or questions on this document should be directed to the user's national standards body. A complete listing of these bodies can be found at www.iso.org/members.html.

© ISO 2023 – All rights reserved

Documents
Document Sharing Hub
Full document details: BS ISO 24647:2023

Documents
Document Sharing Hub

Non-destructive testing — Robotic ultrasonic test systems — General requirements

1 Scope

This document specifies the necessary system hardware components, the characteristics, the component requirements and conditions for the application of robotic ultrasonic test systems.

This document specifies the general requirements and acceptance criteria for robotic ultrasonic test systems.

This document is applicable to robotic ultrasonic test systems composed of one or more robot(s). Some of the characteristics of a robot ultrasonic testing system can be application-specific.

This document is applicable to conventional straight-beam probes and immersion technique.

This document is also applicable for phased array equipment, but additional tests can be necessary.

2 Normative references

The following documents are referred to in the text in such a way that some or all of their content constitutes requirements of this document. For dated references, only the edition cited applies. For undated references, the latest edition of the referenced document (including any amendments) applies.

ISO 230-1, *Test code for machine tools — Part 1: Geometric accuracy of machines operating under no-load or quasi-static conditions*

ISO 230-2, *Test code for machine tools — Part 2: Determination of accuracy and repeatability of positioning of numerically controlled axes*

ISO 5577, *Non-destructive testing — Ultrasonic testing — Vocabulary*

ISO 8373, *Robotics — Vocabulary*

ISO 9283, *Manipulating industrial robots — Performance criteria and related test methods*

ISO 9712, *Non-destructive testing — Qualification and certification of NDT personnel*

ISO 22232 (all parts), *Non-destructive testing — Characterization and verification of ultrasonic test equipment*

3 Terms and definitions

For the purposes of this document, the terms and definitions given in ISO 5577, ISO 8373, ISO 9283, ISO 22232 (all parts) and the following apply.

ISO and IEC maintain terminology databases for use in standardization at the following addresses:

— ISO Online browsing platform: available at https://www.iso.org/obp

— IEC Electropedia: available at https://www.electropedia.org/

3.1
robotic ultrasonic test system
automatic scanning ultrasonic test system, controlled by computer program, with the scanning motion implemented by one or multiple robots

© ISO 2023 – All rights reserved

AVA Documents Document Sharing Hub
Full document details: BS ISO 24647:2023

3.2
joint robot
robot fitted with rotary joints

Note 1 to entry: Rotary joints allow a full range of motion, as they rotate through multiple planes, and they increase the manipulating capabilities of the robot considerably. An articulated robot can have one or more rotary joints, and other types of joints may be used as well, depending on the design of the robot and its intended function.

3.3
scan path
motion trajectory of the probe relative to the test object when the robot is executing the ultrasonic scanning with the probe or the test object held by the *end effector* (3.5) of the robot

3.4
Cartesian robot
robot whose arm has three prismatic joints, whose axes are coincident with a Cartesian coordinate system

3.5
end effector
device specifically designed for attachment to the robot's mechanical interface to enable the robot to perform its task

3.6
tool coordinate system
coordinate system referenced to the tool (probe or test piece) or to the *end effector* (3.5) attached to the mechanical interface

4 Requirements for test personnel

a) Personnel to perform verification tests using this document shall be qualified in accordance with ISO 9712 or equivalent.

b) The personnel shall be familiar with the robotic ultrasonic scanning equipment and robot motion control technique.

c) The personnel shall be authorized by the employer or his/her agent.

5 Test system

5.1 General

Robotic ultrasonic test systems are automated high-performance ultrasonic test systems.

They are equipped with robotic manipulating technology and ultrasonic testing technology.

A robotic ultrasonic test system is mainly composed of one or more robot(s), with one or more ultrasonic probe(s), an ultrasonic instrument and a fluid, gas or contact coupling system.

Single-pulse excitation or tone burst excitation is used.

Ultrasonic reflection or through-transmission technique may be implemented.

Two-dimensional or three-dimensional images may be used to display the test results to show the shape and the position of the detected imperfections.

© ISO 2023 – All rights reserved
Documents
Document Sharing Hub
Full document details: BS ISO 24647:2023

5.2 Design principles

a) The design of the test system shall meet the requirements of the application for the objects to be tested.

b) The ambient conditions and the requirements of the test method shall be taken into account.

c) The distance between the surface of the test objects and the probes shall be kept constant during ultrasonic scanning.

d) Electrical or mechanical interferences shall be reduced to a minimum by design.

5.3 Test equipment

5.3.1 Instrument

a) The ultrasonic instrument shall meet the requirements of ISO 22232-1 where applicable.

b) The ultrasonic instrument shall be selected according to the application.

c) The ultrasonic instrument shall support ultrasonic pulse-echo and/or ultrasonic through-transmission mode.

d) The ultrasonic instrument shall have signal conditioning circuits for the excitation and the reception of ultrasonic pulses.

e) The technical properties such as transmitter pulse voltage, transmitter pulse width, repetition frequency, gain range, filtering bandwidth, digitizing frequency, digitizing dynamic range (A/D converter bits) and crosstalk shall be specified in accordance with ISO 22232-1 and shall satisfy the requirements of the application.

f) The technical properties of the ultrasonic instrument shall be determined according to the application (e.g. material characteristics and the sensitivity requirements).

5.3.2 Probes

a) The ultrasonic probes shall be selected according to the test procedure.

b) The ultrasonic probes shall meet the requirements of ISO 22232-2.

c) The technical parameters of the ultrasonic probes, such as frequency, beam diameter, focal distance and relative bandwidth, shall be specified in accordance with ISO 22232-2 and shall satisfy the requirements of the application.

d) The cable length between the probes and the instrument shall be reduced to a minimum to reduce cable attenuation and electrical noise. The housing shall be electrically grounded.

5.3.3 Robots

a) The robots shall be selected according to the requirements of the test procedure.

b) The robots shall conform to the requirements for the scan pattern and the scan speed.

c) The robots may be joint robots or Cartesian robots.

d) The technical properties such as freedom of mechanical movement, range for manipulation, maximum moving speed, motion accuracy and positioning repetition accuracy shall be specified and shall satisfy the requirements of the application.

e) The end effector of the robots shall provide a flange for the attachment of an ultrasonic probe and/or the test object as well as a coupling supply squirter if necessary.

AVA Documents
Document Sharing Hub

© ISO 2023 – All rights reserved

Full document details: BS ISO 24647:2023

f) The position and orientation of the probe's coordinate system or the coordinate system of the test object relative to the coordinate system of the robots end effector flange or the coordinate system of the robot base shall be provided to express tested point position in different geometrical coordinate systems.

5.3.4 Couplant

a) Dependent on the application, gas or liquid may be used as couplant with a robotic ultrasonic test system.

b) For liquid coupling, a squirter or immersion device and a circulation system for the couplant shall be provided.

5.4 Typical test systems

5.4.1 Single-robot test system

5.4.1.1 System components

Figure 1 shows the composition of a robotic ultrasonic test system based on one robot. The system setup is mainly composed of an ultrasonic instrument, an ultrasonic probe, a robot and its control system including software and a couplant circulation system. The system shall be arranged in a way that either the probe or the test object is moved by the robot.

a) Computer and robot controller shall be connected for control command and trajectory data transfer.

b) Computer and ultrasonic instrument shall be connected for control command and ultrasonic data transfer.

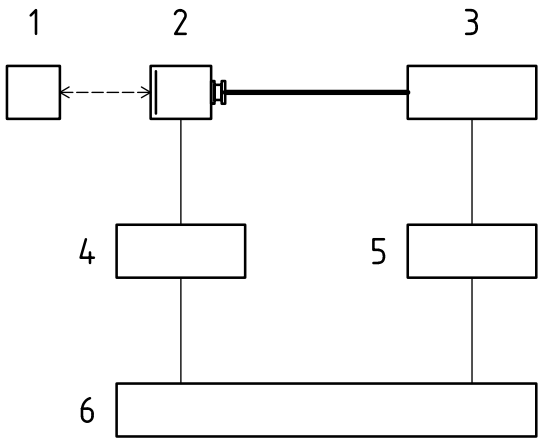

Key

1	test object
2	probe
3	robot
4	ultrasonic instrument
5	robot controller
6	computer and software
<----->	sound path
————	electrical connection
━━━━━━	mechanical connection

Figure 1 — Single-robot ultrasonic test system

© ISO 2023 – All rights reserved
Documents
Document Sharing Hub
Full document details: BS ISO 24647:2023

5.4.1.2 Scan modes

5.4.1.2.1 Scan mode with movement of the probe

The robot moves the probe while the test object is fixed, as shown in Figure 2.

This mode shall be used when the test object is too large or too heavy to be held by a robot.

It is suitable when the size of the test object is large and/or the acoustic attenuation is low so that the back-wall echo can be evaluated.

Usually, the ultrasonic probe is of little weight so that the robot can hold it without overload.

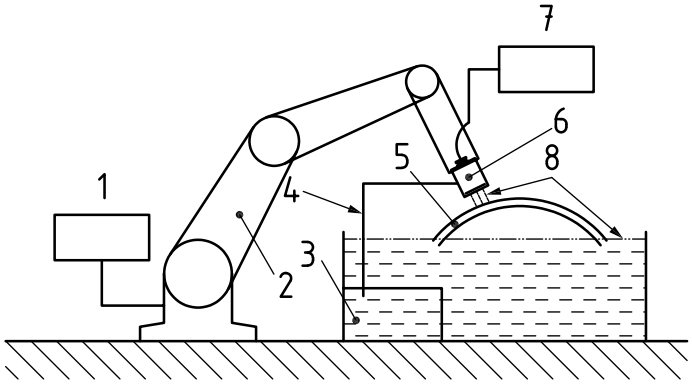

Key

1 robot controller
2 robot
3 circulatory system for couplant
4 couplant supply
5 test object
6 probe
7 ultrasonic instrument
8 couplant (e.g. water)

Figure 2 — Scan mode with movement of the probe (example for squirter technique)

5.4.1.2.2 Scan mode with movement of the test object

The robot moves the test object while the probe is fixed, as shown in Figure 3.

This scan mode shall be used when the test object has a small size and complex profile.

It is suitable for the case when the size of the test object is small and the acoustic attenuation is low so that the back-wall echo can be received.

The weight of the test object is limited by the robot's load ability.

© ISO 2023 – All rights reserved

Documents
Document Sharing Hub
Full document details: BS ISO 24647:2023

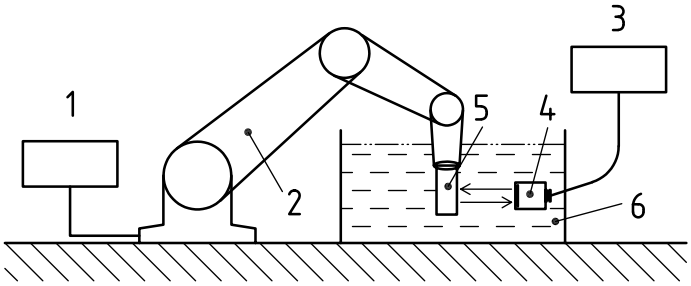

Key

1 robot controller
2 robot
3 ultrasonic instrument
4 probe
5 test object
6 couplant (e.g. water)

Figure 3 — Scan mode with movement of the test object (example for immersion technique)

5.4.2 Twin-robot test system

5.4.2.1 System components

Figure 4 shows twin-robots ultrasonic test systems.

The system setup is mainly composed of one or two ultrasonic probes, one ultrasonic instrument, two robots and their control systems, including software and a couplant circulation system.

The software shall be able to send robot control commands, to transfer scan pattern data, to send commands to the ultrasonic instrument and to transfer ultrasonic signal data.

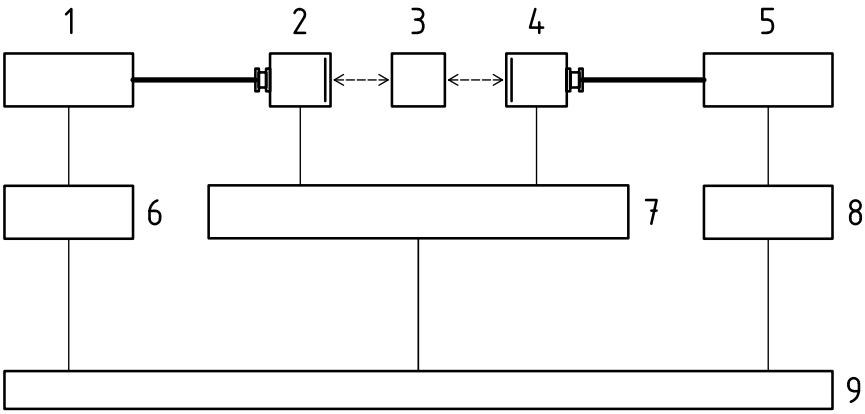

a) Setup with two robots and two probes

© ISO 2023 – All rights reserved
Documents
Document Sharing Hub
Full document details: BS ISO 24647:2023