BS ISO 24652:2023

BSI Standards Publication

Spherical plain bearings — Spherical plain bearings rod ends for hydraulic fluid power cylinders

Documents
Document Sharing Hub

Full document details: BS ISO 24652:2023

National foreword

This British Standard is the UK implementation of ISO 24652:2023.

The UK participation in its preparation was entrusted to Technical Committee MCE/7, Rolling bearings.

A list of organizations represented on this committee can be obtained on request to its committee manager.

Contractual and legal considerations

This publication has been prepared in good faith, however no representation, warranty, assurance or undertaking (express or implied) is or will be made, and no responsibility or liability is or will be accepted by BSI in relation to the adequacy, accuracy, completeness or reasonableness of this publication. All and any such responsibility and liability is expressly disclaimed to the full extent permitted by the law.

This publication is provided as is, and is to be used at the recipient's own risk.

The recipient is advised to consider seeking professional guidance with respect to its use of this publication.

This publication is not intended to constitute a contract. Users are responsible for its correct application.

© The British Standards Institution 2023
Published by BSI Standards Limited 2023

ISBN 978 0 539 12118 6

ICS 21.100.10

Compliance with a British Standard cannot confer immunity from legal obligations.

This British Standard was published under the authority of the Standards Policy and Strategy Committee on 30 September 2023.

Amendments/corrigenda issued since publication

Date	Text affected

Documents
Document Sharing Hub

Full document details: BS ISO 24652:2023

INTERNATIONAL STANDARD

ISO 24652

First edition
2023-09

Spherical plain bearings — Spherical plain bearings rod ends for hydraulic fluid power cylinders

Rotules lisses — Embouts à rotule pour vérins hydrauliques

Reference number
ISO 24652:2023(E)

Documents
Document Sharing Hub

© ISO 2023

Full document details: BS ISO 24652:2023

COPYRIGHT PROTECTED DOCUMENT

© ISO 2023

All rights reserved. Unless otherwise specified, or required in the context of its implementation, no part of this publication may be reproduced or utilized otherwise in any form or by any means, electronic or mechanical, including photocopying, or posting on the internet or an intranet, without prior written permission. Permission can be requested from either ISO at the address below or ISO's member body in the country of the requester.

ISO copyright office
CP 401 • Ch. de Blandonnet 8
CH-1214 Vernier, Geneva
Phone: +41 22 749 01 11
Email: copyright@iso.org
Website: www.iso.org

Published in Switzerland

© ISO 2023 – All rights reserved

Documents
Document Sharing Hub

Full document details: BS ISO 24652:2023

Contents

Page

Foreword ..... **iv**
Introduction ..... **v**
1 Scope **1**
2 Normative references **1**
3 Terms and definitions **1**
4 Symbols **2**
5 Design **3**
6 Dimensions **10**
6.1 General 10
6.2 Spherical plain bearings rod end, welded type 11
6.3 Spherical plain bearings rod end, threaded type 13
7 Technical requirements **18**
7.1 Material and heat treatment 18
7.1.1 Inner ring and outer ring 18
7.1.2 Rod end housing 18
7.1.3 Hexagon socket head cap screws 18
7.2 Tolerances 18
7.2.1 Rod end inner ring 18
7.2.2 Deviation of centre height Δ_{h1s} and Δ_{h2s} 19
7.2.3 Tolerance class for thread 20
7.3 Radial internal clearances 20
7.4 Surface roughness 21
7.5 Surface treatments 21
7.6 Rotation and oscillation flexibility 21
7.7 Load ratings and life 21
Annex A (informative) **Symbols/identification codes** **22**
Annex B (informative) **Fixation by retaining rings** **23**
Annex C (informative) **Mounting example — Spherical plain bearing rod end on hydraulic fluid power cylinders** **28**
Annex D (informative) **Surfaces — Features** **30**
Bibliography **32**

© ISO 2023 – All rights reserved

Documents
Document Sharing Hub
Full document details: BS ISO 24652:2023

Foreword

ISO (the International Organization for Standardization) is a worldwide federation of national standards bodies (ISO member bodies). The work of preparing International Standards is normally carried out through ISO technical committees. Each member body interested in a subject for which a technical committee has been established has the right to be represented on that committee. International organizations, governmental and non-governmental, in liaison with ISO, also take part in the work. ISO collaborates closely with the International Electrotechnical Commission (IEC) on all matters of electrotechnical standardization.

The procedures used to develop this document and those intended for its further maintenance are described in the ISO/IEC Directives, Part 1. In particular, the different approval criteria needed for the different types of ISO document should be noted. This document was drafted in accordance with the editorial rules of the ISO/IEC Directives, Part 2 (see www.iso.org/directives).

ISO draws attention to the possibility that the implementation of this document may involve the use of (a) patent(s). ISO takes no position concerning the evidence, validity or applicability of any claimed patent rights in respect thereof. As of the date of publication of this document, ISO had not received notice of (a) patent(s) which may be required to implement this document. However, implementers are cautioned that this may not represent the latest information, which may be obtained from the patent database available at www.iso.org/patents. ISO shall not be held responsible for identifying any or all such patent rights.

Any trade name used in this document is information given for the convenience of users and does not constitute an endorsement.

For an explanation of the voluntary nature of standards, the meaning of ISO specific terms and expressions related to conformity assessment, as well as information about ISO's adherence to the World Trade Organization (WTO) principles in the Technical Barriers to Trade (TBT), see www.iso.org/iso/foreword.html.

This document was prepared by Technical Committee ISO/TC 4, *Rolling bearings*, Subcommittee SC 7, *Spherical plain bearings*, in collaboration with Technical Committee ISO/TC 131, *Fluid power systems*, Subcommittee SC 3, *Cylinders*.

Any feedback or questions on this document should be directed to the user's national standards body. A complete listing of these bodies can be found at www.iso.org/members.html.

© ISO 2023 – All rights reserved
Documents
Document Sharing Hub
Full document details: BS ISO 24652:2023

Introduction

In hydraulic fluid power systems, power is transmitted and controlled through a fluid (liquid) under pressure within an enclosed circuit.

One component of such systems is the fluid power cylinder. This is a device that converts power into linear mechanical force and motion. It consists of a moveable element, i.e. a piston and a piston rod, operating within a cylindrical bore.

The spherical plain bearings rod ends are used on piston rods of hydraulic cylinders for mechanical transmitting the cylinder force under oscillatory rotational and tilting movements. The design of the spherical plain bearing rod ends is based on the maximum forces resulting from the specified internal diameter of the cylinders and pressure according to the ISO 6020 series and ISO 6022.

The dimensions and tolerances specified in this document have been selected to permit the design and use of spherical plain bearings rod ends which incorporate radial spherical plain bearings having various sliding material combinations. These spherical plain bearings can be requiring maintenance (steel/steel or steel/bronze), maintenance-free [e.g. steel/polytetrafluoroethylene (PTFE)] and/or sealed.

NOTE Spherical plain bearings rod ends for hydraulic fluid power cylinders can be used for other applications than hydraulic fluid power cylinders as well.

Type D and Type E from this document are in the scope of ISO 8132 and ISO 8133.

© ISO 2023 – All rights reserved

Documents
Document Sharing Hub
Full document details: BS ISO 24652:2023

Documents
Document Sharing Hub

Spherical plain bearings — Spherical plain bearings rod ends for hydraulic fluid power cylinders

1 Scope

This document specifies designs, dimensions, tolerances and technical requirements of spherical plain bearings rod ends for hydraulic fluid power cylinders.

The specified tolerance values apply to finished spherical plain bearing rod ends before any coating, plating, ring splitting or fracturing.

2 Normative references

The following documents are referred to in the text in such a way that some or all of their content constitutes requirements of this document. For dated references, only the edition cited applies. For undated references, the latest edition of the referenced document (including any amendments) applies.

ISO 68-1, *ISO general purpose screw threads — Basic profile — Part 1: Metric screw threads*

ISO 286-2, *Geometrical product specifications (GPS) — ISO code system for tolerances on linear sizes — Part 2: Tables of standard tolerance classes and limit deviations for holes and shafts*

ISO 582:1995, *Rolling bearings — Chamfer dimensions — Maximum values*

ISO 965-1, *ISO general purpose metric screw threads — Tolerances — Part 1: Principles and basic data*

ISO 1132-1, *Rolling bearings — Tolerances — Part 1: Terms and definitions*

ISO 4762, *Hexagon socket head cap screws*

ISO 5598, *Fluid power systems and components — Vocabulary*

ISO 6811, *Spherical plain bearings — Vocabulary*

ISO 8132, *Hydraulic fluid power — Mounting dimensions for accessories for single rod cylinders, 16 MPa (160 bar) medium and 25 MPa (250 bar) series*

ISO 8133, *Hydraulic fluid power — Mounting dimensions for accessories for single rod cylinders, 16 MPa (160 bar) compact series*

ISO 12240-1:1998, *Spherical plain bearings — Part 1: Radial spherical plain bearings*

3 Terms and definitions

For the purposes of this document, the terms and definitions given in ISO 1132-1, ISO 5598, ISO 6811 and the following apply.

ISO and IEC maintain terminology databases for use in standardization at the following addresses:

— ISO Online browsing platform: available at https://www.iso.org/obp

— IEC Electropedia: available at https://www.electropedia.org/

© ISO 2023 – All rights reserved

Documents
Document Sharing Hub
Full document details: BS ISO 24652:2023

3.1
spherical plain bearings rod end, welded type
spherical plain bearings rod end having a welding chamfer or a welding shank at the bottom for fastening the rod end to the cylinder by welding

3.2
spherical plain bearings rod end, threaded type
spherical plain bearings rod end having an internal thread that is connected to the cylinder by thread, with or without locking device

3.3
angle of tilt of bearing
α
permissible angular displacement of the inner member relative to the outer member of a spherical plain bearing or rod end

Note 1 to entry: See Figure 1.

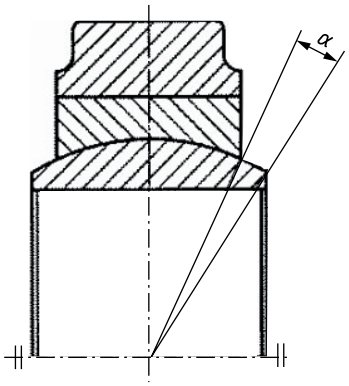

Figure 1 — Angle of tilt of a bearing

Note 2 to entry: Attention is drawn to the fact that after mounting a spherical plain bearing rod end on a shaft, the angle through which the rod end can tilt can be restricted by design of adjacent components.

[SOURCE: ISO 6811:1998, 03.02.01, modified — "of bearing" has been added to the term and, Figure 1 and Note 1 to entry have been added.]

4 Symbols

For the purposes of this document, the symbols in Table 1 apply.

The symbols (except those for tolerances) shown in the Figures 1 to 3 and the values given in Tables 2 to 10 denote nominal dimensions, unless otherwise specified.

Table 1 — Symbols

Symbol	Symbol/identification code according to ISO 6099[a]	Description	Unit
B	*EN*	Inner ring width	mm
b	–	Width of thread connected side of rod end	mm
C_1	*EU*	Width of rod end eye	mm
d	*CN*	Bore diameter of inner ring	mm
d_k	–	Sphere diameter	mm

[a] ISO 6099 covers the identification codes for cylinder mounting dimensions and accessories (see Annex A).

© ISO 2023 – All rights reserved
Documents
Document Sharing Hub
Full document details: BS ISO 24652:2023

Table 1 *(continued)*

Symbol	Symbol/identification code according to ISO 6099[a]	Description	Unit
d_2	*2EF*	Outside diameter of rod end eye	mm
d_4	*N*	Rod end shank shoulder diameter	mm
d_5	–	Rod end shank diameter for welding end	mm
d_6	–	Locating pin diameter	mm
d_7	–	Diameter of small flange step of rod end	mm
d_8	–	Diameter of large flange step of rod end	mm
d_9	–	Flange diameter for welded end	mm
e	–	Chamfer dimension for welded end	mm
F_n	–	Nominal cylinder force	kN
G	*KK*	Designation of thread	mm
h_1	*CH*	Centre height of threaded rod end	mm
h_2	–	Centre height of welded rod end	mm
L	–	Width of bottom side of threaded rod end	mm
l_3	*AV*	Thread length	mm
l_4	–	Overall length of threaded rod end	mm
l_6	–	Overall length of welded rod end	mm
l_7	*LF*	Length from the bearing bore centre to the stepped surface of shank	mm
l_8	–	Length of locating pin	mm
l_{33}	–	Depth of thread hole	mm
Ra	–	Surface roughness	µm
r_s	–	Single chamfer dimension of inner ring	mm
V_{dmp}	–	Variation of mean bore diameter	µm
V_{dsp}	–	Variation of bore diameter in a single radial plane	µm
α	*Z*	Angle of tilt of bearing	°
Δ_{Bs}	–	Deviation of a single inner ring width	µm
Δ_{dmp}	–	Deviation of mean bore diameter in a single plane	µm
Δ_{h1s}	–	Deviation of centre height of threaded rod end	mm
Δ_{h2s}	–	Deviation of centre height of welded rod end	mm

[a] ISO 6099 covers the identification codes for cylinder mounting dimensions and accessories (see Annex A).

Annex A shows an application example of the symbols according to this document and the identification codes of ISO 6099.

5 Design

The rod end bearings for hydraulic cylinders comprise a radial spherical plain bearing and a rod end housing. The spherical plain bearing rod end, welded type for hydraulic cylinders is shown in Figure 2, and threaded type is shown in Figure 3.

NOTE 1 The figures only show an example of the design. For example, the design from Figure 3 a) can have two screws on one side. Conformity with the designs illustrated is not required.

Table 2 gives an overview about the different design variants.

NOTE 2 With or without lubricating nipple or lubrication hole. Type and design of lubricating nipple or lubrication hole at manufacturer's discretion.

© ISO 2023 – All rights reserved

Documents
Document Sharing Hub
Full document details: BS ISO 24652:2023

NOTE 3 The spherical plain bearings can be axially located in the housing by means of retaining rings.

NOTE 4 A suitable thread locking device can be used.

NOTE 5 Differences in shape of the rod end housing depending on the manufacturer's processes can occur.

Table 2 — Overview of rod end designs

Basic type [a]	Type	Dimension series	Remark 1	Remark 2	Figure
Welded type	Rod ends with a cylindrical welding section with locating pin	E	Spherical plain bearing unassisted of retaining rings	–	2 a)
	Rod ends with a welding chamfer	E	Spherical plain bearing located by means of retaining rings [c]	–	2 b)
	Rod ends with a rectangular welding section	E, W		–	2 c)
Threaded type [d]	A [b]	E		Thread locking device by two hexagon socket head cap screws **left and/or right** of the internal thread of the rod end shank	3 a)
	B [b]	E		-	3 b)
	C [b]	E		Thread locking device by two hexagon socket head cap screws **on one side** of the internal thread of the rod end shank	3 c)
	D [b]	W		Thread locking device by two hexagon socket head cap screws **left and/or right** of the internal thread of the rod end shank	3 d)
	E [b]	E	Spherical plain bearing unassisted of retaining rings		3 e)

[a] Spherical plain bearing shall be in accordance with ISO 12240-1.

[b] The different stud holes are given for $d \leq 30$ mm and $d > 30$ mm.

[c] See Annex B.

[d] Threads shall be in accordance with ISO 68-1.

Retaining rings and retaining ring grooves are shown in Annex B. Annex C shows a mounting example of a spherical plain bearing rod end on a hydraulic fluid power cylinder.

© ISO 2023 – All rights reserved

Documents
Document Sharing Hub

Full document details: BS ISO 24652:2023

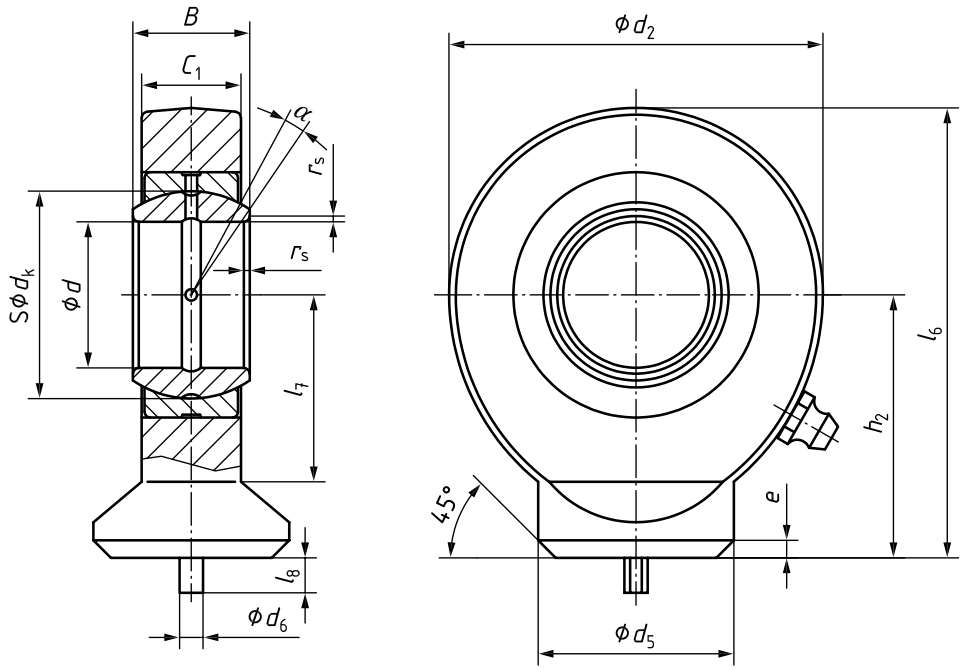

a) Rod ends with a cylindrical welding section with locating pin

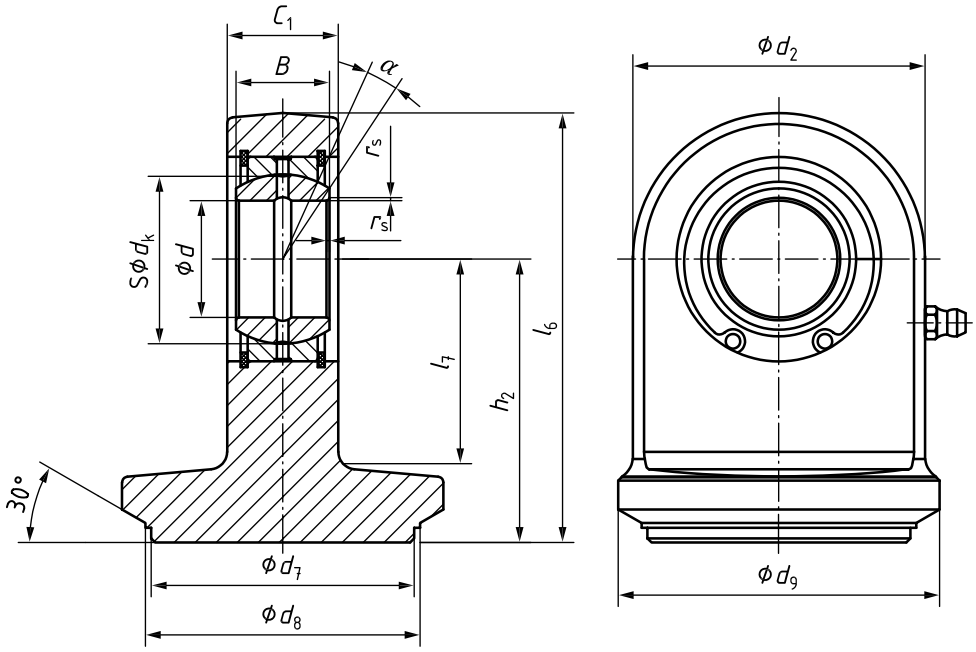

b) Rod ends with a welding chamfer

© ISO 2023 – All rights reserved

Documents
Document Sharing Hub
Full document details: BS ISO 24652:2023