BS ISO 24682:2024

BSI Standards Publication

Ships and marine technology — Technical requirements for "B" class fire-resistant compartment systems of composite mineral wool panel

Documents
Document Sharing Hub

Full document details: BS ISO 24682:2024

National foreword

This British Standard is the UK implementation of ISO 24682:2024.

The UK participation in its preparation was entrusted to Technical Committee SME/32, Ships and marine technology - Steering committee.

A list of organizations represented on this committee can be obtained on request to its committee manager.

Contractual and legal considerations

This publication has been prepared in good faith, however no representation, warranty, assurance or undertaking (express or implied) is or will be made, and no responsibility or liability is or will be accepted by BSI in relation to the adequacy, accuracy, completeness or reasonableness of this publication. All and any such responsibility and liability is expressly disclaimed to the full extent permitted by the law.

This publication is provided as is, and is to be used at the recipient's own risk.

The recipient is advised to consider seeking professional guidance with respect to its use of this publication.

This publication is not intended to constitute a contract. Users are responsible for its correct application.

© The British Standards Institution 2024
Published by BSI Standards Limited 2024

ISBN 978 0 539 19114 1

ICS 47.020.05

Compliance with a British Standard cannot confer immunity from legal obligations.

This British Standard was published under the authority of the Standards Policy and Strategy Committee on 30 September 2024.

Amendments/corrigenda issued since publication

Date	Text affected

Documents
Document Sharing Hub

Full document details: BS ISO 24682:2024

International Standard

ISO 24682

First edition
2024-09

Ships and marine technology — Technical requirements for "B" class fire-resistant compartment systems of composite mineral wool panel

Navires et technologie maritime — Exigences techniques pour les systèmes de compartiments résistants aux feux de classe B en panneaux composites de laine minérale

Reference number
ISO 24682:2024(en)

© ISO 2024

Documents
Document Sharing Hub

Full document details: BS ISO 24682:2024

COPYRIGHT PROTECTED DOCUMENT

© ISO 2024

All rights reserved. Unless otherwise specified, or required in the context of its implementation, no part of this publication may be reproduced or utilized otherwise in any form or by any means, electronic or mechanical, including photocopying, or posting on the internet or an intranet, without prior written permission. Permission can be requested from either ISO at the address below or ISO's member body in the country of the requester.

ISO copyright office
CP 401 • Ch. de Blandonnet 8
CH-1214 Vernier, Geneva
Phone: +41 22 749 01 11
Email: copyright@iso.org
Website: www.iso.org

Published in Switzerland

Documents
Document Sharing Hub
Full document details: BS ISO 24682:2024

Contents

Page

Foreword ... **iv**
Introduction ... **v**
1 Scope ... **1**
2 Normative references ... **1**
3 Terms and definitions ... **1**
4 Requirements ... **2**
4.1 Materials ... 2
4.2 Fire resistance ... 3
4.3 Acoustic insulation ... 11
4.4 Opening in “B” class division ... 12
4.4.1 Opening for “B” class fire door ... 12
4.4.2 Opening for window or balcony door ... 12
4.4.3 Other openings ... 12
4.5 Penetration ... 12
4.5.1 General ... 12
4.5.2 Pipes ... 13
4.5.3 Ventilation ducts ... 13
4.5.4 Electric cables ... 13
4.6 Tolerance requirements ... 13
4.7 Appearance ... 15
5 Inspection ... **15**
5.1 Materials ... 15
5.2 Fire resistance ... 16
5.3 Acoustic insulation ... 16
5.4 Opening ... 16
5.5 Penetration ... 16
5.6 Installation tolerance ... 16
5.7 Appearance ... 16
Annex A (informative) **“B” class composite mineral wool panel** ... **17**
Annex B (informative) **Typical connection and installation details** ... **18**
Annex C (informative) **Typical construction of penetrations** ... **24**
Bibliography ... **31**

© ISO 2024 – All rights reserved

Documents
Document Sharing Hub
Full document details: BS ISO 24682:2024

Foreword

ISO (the International Organization for Standardization) is a worldwide federation of national standards bodies (ISO member bodies). The work of preparing International Standards is normally carried out through ISO technical committees. Each member body interested in a subject for which a technical committee has been established has the right to be represented on that committee. International organizations, governmental and non-governmental, in liaison with ISO, also take part in the work. ISO collaborates closely with the International Electrotechnical Commission (IEC) on all matters of electrotechnical standardization.

The procedures used to develop this document and those intended for its further maintenance are described in the ISO/IEC Directives, Part 1. In particular, the different approval criteria needed for the different types of ISO document should be noted. This document was drafted in accordance with the editorial rules of the ISO/IEC Directives, Part 2 (see www.iso.org/directives).

ISO draws attention to the possibility that the implementation of this document may involve the use of (a) patent(s). ISO takes no position concerning the evidence, validity or applicability of any claimed patent rights in respect thereof. As of the date of publication of this document, ISO had not received notice of (a) patent(s) which may be required to implement this document. However, implementers are cautioned that this may not represent the latest information, which may be obtained from the patent database available at www.iso.org/patents. ISO shall not be held responsible for identifying any or all such patent rights.

Any trade name used in this document is information given for the convenience of users and does not constitute an endorsement.

For an explanation of the voluntary nature of standards, the meaning of ISO specific terms and expressions related to conformity assessment, as well as information about ISO's adherence to the World Trade Organization (WTO) principles in the Technical Barriers to Trade (TBT), see www.iso.org/iso/foreword.html.

This document was prepared by Technical Committee ISO/TC 8, *Ships and marine technology,* Subcommittee SC 8, *Ship design*.

Any feedback or questions on this document should be directed to the user's national standards body. A complete listing of these bodies can be found at www.iso.org/members.html.

© ISO 2024 – All rights reserved

Documents
Document Sharing Hub
Full document details: BS ISO 24682:2024

Introduction

"B" class fire-resistant compartment systems made of composite mineral wool panels are widely used in accommodation spaces in ships and offshore installations. Both ships and offshore installations have fire and acoustic insulation capability as required by 1974 International Convention for the Safety of Life at Sea (SOLAS 74) and its amendments.

This document is aligned with IMO documents, in particular SOLAS 74, IMO Resolution MSC.337 (91), IMO MSC/Circ.917 and the International code for application of fire test procedures (FTP Code).

© ISO 2024 – All rights reserved

Documents
Document Sharing Hub
Full document details: BS ISO 24682:2024

Documents
Document Sharing Hub

Ships and marine technology — Technical requirements for "B" class fire-resistant compartment systems of composite mineral wool panel

1 Scope

This document provides requirements on fire resistance, acoustic insulation, opening and penetration for "B" class fire-resistant compartment systems made of composite mineral wool panel, which are aligned with the 2010 FTP Code and SOLAS 74 and its amendments. This document also specifies how these "B" class fire-resistant compartment systems are inspected.

This document is applicable to accommodation spaces made by "B" class composite mineral wool panels for ships and offshore installations where "B" class divisions are required.

2 Normative references

The following documents are referred to in the text in such a way that some or all of their content constitutes requirements of this document. For dated references, only the edition cited applies. For undated references, the latest edition of the referenced document (including any amendments) applies.

ISO 1716, *Reaction to fire tests for products — Determination of the gross heat of combustion (calorific value)*

ISO 10140-2, *Acoustics — Laboratory measurement of sound insulation of building elements — Part 2: Measurement of airborne sound insulation*

ISO 22262-1, *Air quality — Bulk materials — Part 1: Sampling and qualitative determination of asbestos in commercial bulk materials*

2010 FTP Code — *International code for application of fire test procedures*

SOLAS — *International Convention for the Safety of Life at Sea*

IMO Resolution MSC.337 (91) — *Code on noise levels on board ships*

IMO MSC/Circ.917 — *Guidelines on Fire Safety Construction in Accommodation Areas* – (4 June 1999)

3 Terms and definitions

For the purposes of this document, the following terms and definitions apply.

ISO and IEC maintain terminology databases for use in standardization at the following addresses:

— ISO Online browsing platform: available at https://www.iso.org/obp

— IEC Electropedia: available at https://www.electropedia.org/

3.1
"B" class
"B" class division
classification formed by bulkheads, decks, ceilings, or linings, including "B-15" and "B-0" class, constructed of approved *non-combustible materials* (3.6)

[SOURCE: SOLAS, Chapter II-2, Reg. 3.4]

© ISO 2024 – All rights reserved

Documents
Document Sharing Hub
Full document details: BS ISO 24682:2024

3.2
"B" class composite mineral wool panel
panel composed of a metal sheet, or sheets associated with mineral wool, and which meet "B-15" and "B-0" class requirements

3.3
"B" class fire door
fixed door which has a fire resistance that is equivalent to *"B" class division* (3.1)

Note 1 to entry: See 2010 FTP Code, Annex 1, Part 3 for further details on the criteria with which a "B" class fire door must comply.

3.4
window box
connection box between the *"B" class composite mineral wool panel* (3.2) and window or side scuttle

3.5
"B" class fire-resistant compartment system
compartment system consisting of a *"B" class composite mineral wool panel* (3.2), *"B" class fire door* (3.3), *window box* (3.4), as well as any other openings and/or penetrations in the *"B" class division* (3.1)

3.6
non-combustible material
material which neither burns nor gives off flammable vapours in sufficient quantity for self-ignition when heated to approximately 750 °C

3.7
combustible material
material other than *non-combustible material* (3.6)

3.8
low flame-spread characteristic
surface material of *"B" class division* (3.1) designed to adequately restrict the spread of flame

[SOURCE: SOLAS, Chapter II-2, Reg. 3.29]

3.9
"C" class
division constructed of approved *non-combustible materials* (3.6), which does not need to meet requirements relative to the passage of smoke and flame nor limitations relative to the temperature rise

[SOURCE: SOLAS, Chapter II-2, Reg. 3.10]

4 Requirements

4.1 Materials

All materials shall be free of asbestos in accordance with SOLAS, Chapter II-1, Regulation 3-5.

Insulating materials shall be non-combustible, in accordance with SOLAS, Chapter II-2, Regulation 5.3.1.1.

Adhesives shall have low flame-spread characteristics in accordance with SOLAS II-2, Regulation 5.3.1.1.

Combustible materials which are used upon the exposed finishing surface of the "B" class fire-resistant compartment systems, such as facings, mouldings, decorations and veneers, in accommodation and service spaces on the combined area of the walls and ceiling linings, shall meet following requirements:

a) their maximum calorific value shall not exceed 45 MJ/m^2 of the area for the thickness used;

b) the total volume of the materials shall have a value not exceeding a volume equivalent to 2,5 mm veneer of the combined area of the interior surface of the "B" class fire-resistant compartment systems. Such

© ISO 2024 – All rights reserved

Documents
Document Sharing Hub
Full document details: BS ISO 24682:2024

volume shall also include the one relevant to the combustible materials applied on the surfaces of the divisions to decorate them, such as mouldings, decorations and skirting;

c) they shall not be capable of producing excessive quantities of smoke and toxic products, as per 2010 FTP Code, Annex 1, Part 2;

d) they shall have low flame-spread characteristics, as per 2010 FTP Code, Annex 1, Part 5.

The density and thickness of composite mineral wool panel shall be within ± 10 % of the nominal values as stated by the designer.

4.2 Fire resistance

"B" class fire-resistant compartment systems shall meet the requirements of SOLAS, Chapter II-2, Regulation 3, and Regulation 9.

For details on the basic construction of "B" class composite mineral wool panels, see Annex A.

For the typical connection and installation details of "B" class composite mineral wool panels, see Annex B.

Arrangements of Figure 1 to Figure 8 are examples. Other arrangements that are in line with IMO MSC/Circ.917 shall be considered acceptable.

© ISO 2024 – All rights reserved

Documents
Document Sharing Hub
Full document details: BS ISO 24682:2024

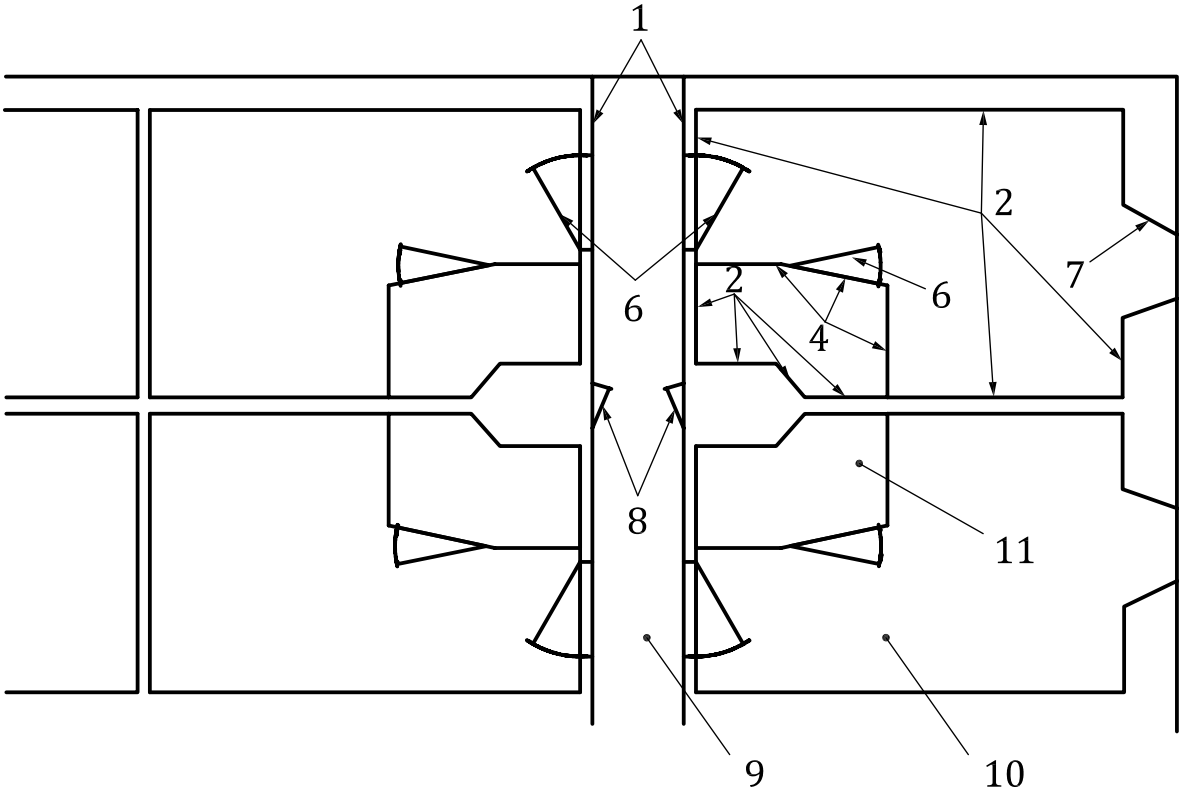

a) Top view

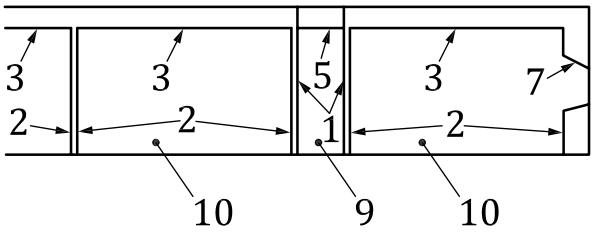

b) Side view

Key

1	“B-15” class bulkhead	7	window box
2	“B-0” class bulkhead	8	access door
3	“B-0” class ceiling	9	corridor
4	”C” class bulkhead	10	cabin
5	“C” class ceiling	11	toilet
6	fire door		

NOTE 1 The corridor has “B-15” bulkheads extending from deck to deck and “C” class ceiling (where provided). The cabin has “B-0” continuous construction. Bulkheads (except the door) between the cabin and corridor or other cabins are not common. The toilet is separated with a “C” class bulkhead from the cabin.

NOTE 2 This construction type is applicable to passenger ships and cargo ships.

Figure 1 — Construction details of “B” class fire-resistant compartment systems — Type I construction

© ISO 2024 – All rights reserved

Documents
Document Sharing Hub
Full document details: BS ISO 24682:2024