BS ISO 27186:2020

BSI Standards Publication

Active implantable medical devices — Four-pole connector system for implantable cardiac rhythm management devices — Dimensional and test requirements

Documents
Document Sharing Hub

Full document details: BS ISO 27186:2020

National foreword

This British Standard is the UK implementation of ISO 27186:2020. It supersedes BS ISO 27186:2010, which is withdrawn.

The UK participation in its preparation was entrusted to Technical Committee CH/150/2, Cardiovascular implants.

A list of organizations represented on this committee can be obtained on request to its committee manager.

This publication does not purport to include all the necessary provisions of a contract. Users are responsible for its correct application.

© The British Standards Institution 2020
Published by BSI Standards Limited 2020

ISBN 978 0 539 05230 5

ICS 11.040.40

Compliance with a British Standard cannot confer immunity from legal obligations.

This British Standard was published under the authority of the Standards Policy and Strategy Committee on 31 December 2020.

Amendments/corrigenda issued since publication

Date	Text affected

Documents
Document Sharing Hub

Full document details: BS ISO 27186:2020

INTERNATIONAL STANDARD

ISO 27186

Second edition
2020-11

Active implantable medical devices — Four-pole connector system for implantable cardiac rhythm management devices — Dimensional and test requirements

Dispositifs médicaux actifs implantables — Systèmes de branchement à quatre pôles pour dispositifs implantables de gestion du rythme cardiaque — Exigences de dimensions et d'essai

Reference number
ISO 27186:2020(E)

Documents
Document Sharing Hub
© ISO 2020

Full document details: BS ISO 27186:2020

COPYRIGHT PROTECTED DOCUMENT

© ISO 2020

All rights reserved. Unless otherwise specified, or required in the context of its implementation, no part of this publication may be reproduced or utilized otherwise in any form or by any means, electronic or mechanical, including photocopying, or posting on the internet or an intranet, without prior written permission. Permission can be requested from either ISO at the address below or ISO's member body in the country of the requester.

ISO copyright office
CP 401 • Ch. de Blandonnet 8
CH-1214 Vernier, Geneva
Phone: +41 22 749 01 11
Email: copyright@iso.org
Website: www.iso.org

Published in Switzerland

© ISO 2020 – All rights reserved

Documents
Document Sharing Hub

Full document details: BS ISO 27186:2020

Contents

Page

Foreword ... **v**
Introduction ... **vi**
1 Scope ... **1**
2 Normative references ... **1**
3 Terms and definitions ... **2**
4 Requirements ... **5**
4.1 General ... 5
4.2 Lead connector physical requirements ... 5
4.2.1 Dimensions ... 5
4.2.2 Materials ... 10
4.2.3 Lead connector electrical connections ... 10
4.2.4 Lead marking ... 10
4.2.5 Lead package labels and literature ... 12
4.3 Lead connector functional requirements ... 12
4.3.1 Functional dimensional check ... 12
4.3.2 Tensile loads ... 13
4.3.3 Deformation due to pin contact forces ... 13
4.3.4 Deformation due to ring contact forces ... 13
4.3.5 Seal zone requirement ... 14
4.3.6 Electrical isolation requirement ... 14
4.3.7 Dielectric strength requirement ... 15
4.3.8 Current-carrying requirement ... 15
4.3.9 Corrosion/environmental ... 15
4.4 Connector cavity physical requirements ... 15
4.4.1 Dimensions ... 15
4.4.2 Connector cavity electrical connections ... 18
4.4.3 Connector cavity/pulse generator marking ... 18
4.4.4 Pulse generator labels and literature ... 19
4.5 Connector cavity functional requirements ... 19
4.5.1 Insertion force ... 19
4.5.2 Retention force ... 20
4.5.3 Withdrawal force ... 21
4.5.4 Ring contact load ... 21
4.5.5 Seal zone load requirement ... 22
4.5.6 Electrical isolation requirement ... 22
4.5.7 Dielectric strength requirement ... 22
4.5.8 Current-carrying requirement (high-voltage connector cavity) ... 22
4.5.9 Contact resistance/stability ... 22
Annex A (normative) **Electrical isolation test** ... **23**
Annex B (informative) **Rational for Annex A** ... **28**
Annex C (normative) **Dielectric strength test** ... **30**
Annex D (informative) **Rational for Annex C** ... **35**
Annex E (normative) **Current-carrying test high-voltage types** ... **39**
Annex F (informative) **Rational for Annex E** ... **44**
Annex G (informative) **Lead connector fatigue strength test** ... **46**
Annex H (informative) **Lead connector seal zone materials** ... **47**
Annex I (informative) **Seal zone creep** ... **49**
Annex J (informative) **Contact resistance stability** ... **54**

© ISO 2020 – All rights reserved

AVA Documents
Document Sharing Hub
Full document details: BS ISO 27186:2020

Annex K (informative) **Rational for Annex J** **58**
Annex L (informative) **Selection of contact materials** **60**
Annex M (normative) **Lead connector contact material requirements** **62**
Annex N (informative) **Rational for Annex M** **66**
Annex O (informative) **Rationale for requirements in this document** **72**
Annex P (informative) **Connector products** **79**
Bibliography **81**

© ISO 2020 – All rights reserved
Documents
Document Sharing Hub
Full document details: BS ISO 27186:2020

Foreword

ISO (the International Organization for Standardization) is a worldwide federation of national standards bodies (ISO member bodies). The work of preparing International Standards is normally carried out through ISO technical committees. Each member body interested in a subject for which a technical committee has been established has the right to be represented on that committee. International organizations, governmental and non-governmental, in liaison with ISO, also take part in the work. ISO collaborates closely with the International Electrotechnical Commission (IEC) on all matters of electrotechnical standardization.

The procedures used to develop this document and those intended for its further maintenance are described in the ISO/IEC Directives, Part 1. In particular, the different approval criteria needed for the different types of ISO documents should be noted. This document was drafted in accordance with the editorial rules of the ISO/IEC Directives, Part 2 (see www.iso.org/directives).

Attention is drawn to the possibility that some of the elements of this document may be the subject of patent rights. ISO shall not be held responsible for identifying any or all such patent rights. Details of any patent rights identified during the development of the document will be in the Introduction and/or on the ISO list of patent declarations received (see www.iso.org/patents).

Any trade name used in this document is information given for the convenience of users and does not constitute an endorsement.

For an explanation of the voluntary nature of standards, the meaning of ISO specific terms and expressions related to conformity assessment, as well as information about ISO's adherence to the World Trade Organization (WTO) principles in the Technical Barriers to Trade (TBT), see www.iso.org/iso/foreword.html.

This document was prepared jointly by Technical Committee ISO/TC 150, *Implants for surgery*, Subcommittee SC 6, *Active implants*, and Technical Committee IEC/SC 62D, *Electromedical equipment*. The draft was circulated for voting to the national bodies of both ISO and IEC.

This second edition cancels and replaces the first edition (ISO 27186:2010), which has been technically revised.

The main changes compared to the previous edition are as follows:

— minor typographical errors have been corrected;

— the notch feature on lead connector pins has been made optional whereas previously it was required;

— the use of the notch feature for retention is no longer permitted;

— a clarification has been made to verify the functional sealing and functional contact zone requirements in 4.4.1.2 and 4.4.1.3.

Any feedback or questions on this document should be directed to the user's national standards body. A complete listing of these bodies can be found at www.iso.org/members.html.

© ISO 2020 – All rights reserved

Documents
Document Sharing Hub
Full document details: BS ISO 27186:2020

Introduction

The four-pole connector was created to reduce the number of individual lead connectors, to reduce pocket bulk associated with existing bifurcated or trifurcated leads, to reduce interaction of the lead bodies in the pocket and to reduce set screw connections.

The intent of this document is to define a four-pole connector assembly that provides interchangeability between implantable leads and pulse generators from different manufacturers.

This document establishes two types of connector assembly: a “high-voltage connector” and a “low-voltage only connector”, each of which has several configurations. The high-voltage connectors either have two low-voltage contacts combined with one or two high-voltage contacts, or they have only two high-voltage contacts. The low-voltage only connectors have either three or four low-voltage contacts.

The high-voltage and low-voltage only connectors and their voltage configurations are not intended to be interchangeable. This document specifies a dimensional lockout feature that prevents the low-voltage contacts of the lead connectors from contacting the high-voltage contacts of high-voltage connector cavities.

© ISO 2020 – All rights reserved
Documents
Document Sharing Hub
Full document details: BS ISO 27186:2020

Active implantable medical devices — Four-pole connector system for implantable cardiac rhythm management devices — Dimensional and test requirements

WARNING — The low-voltage only connector cavity specified in this document is not to be used if the implantable pulse generator is capable of introducing dangerous non-pacing stimuli (e.g. defibrillation shocks) through the contacts of that connector cavity. Likewise, the high-voltage lead connector specified in this document is not to be used on leads intended for low-voltage only therapy.

1 Scope

This document specifies a four-pole connector system for implantable cardiac rhythm management (CRM) devices which have pacing, electrogram sensing and/or defibrillation functions. This document includes requirements for the connector portion of an implantable lead as well as for the mating connector cavity attached to an implantable pulse generator. Essential dimensions and performance requirements are specified together with appropriate test methods.

NOTE The safety, reliability, biocompatibility, biostability and function of any particular part are the responsibility of the manufacturer.

This document is not intended to replace or provide alternatives for unipolar or bipolar connector standards that currently exist (such as ISO 11318 and ISO 5841-3).

This document is not applicable to high-voltage systems with intended outputs greater than 1 000 V and/or 50 A. This document is not applicable to systems which include sensors or unique electrodes that are not capable of conventional pacing, electrogram sensing and/or defibrillation functions.

This document does not specify all connector features.

This document does not address all aspects of functional compatibility, safety or reliability of leads and pulse generators assembled into a system.

NOTE Lead and pulse generator connector systems not conforming to this document can be safe and reliable and can have clinical advantages.

2 Normative references

The following documents are referred to in the text in such a way that some or all of their content constitutes requirements of this document. For dated references, only the edition cited applies. For undated references, the latest edition of the referenced document (including any amendments) applies.

ISO 7436, *Slotted set screws with cup point*

ASTM B348, *Standard Specification for Titanium and Titanium Alloy Bars and Billets*

ASTM F562, *Standard Specification for Wrought 35Cobalt-35Nickel-20Chromium-10Molybdenum Alloy for Surgical Implant Applications*

ASTM F746-04, *Standard Test Method for Pitting or Crevice Corrosion of Metallic Surgical Implant Materials*

© ISO 2020 – All rights reserved

Documents
Document Sharing Hub
Full document details: BS ISO 27186:2020

3 Terms and definitions

For the purposes of this document, the following terms and definitions apply.

ISO and IEC maintain terminological databases for use in standardization at the following addresses:

— ISO Online browsing platform: available at https://www.iso.org/obp

— IEC Electropedia: available at http://www.electropedia.org/

3.1
axial pin movement
axial movement of a *lead connector pin* (3.18) with reference to the *lead connector* (3.16) body as present in some designs, particularly those with a rotating connector pin

3.2
bipolar
having two poles or electrodes

Note 1 to entry: See also *tripolar* (3.31), *integrated bipolar* (3.15), and *four-pole* (3.8).

3.3
connector system
assembly consisting of a *lead connector* (3.16) and a *connector cavity* (3.4) that are electrically and mechanically joined

3.4
connector cavity
cavity within the *pulse generator* (3.27) which is intended to receive a *lead connector* (3.16)

3.5
contact mechanism
conductive hardware within the *connector cavity* (3.4) provided for making electrical connection to corresponding contacts on a *lead connector* (3.16)

3.6
distal
farthest from a point of reference

Note 1 to entry: The point of reference for a lead is the *lead connector pin* (3.18). Therefore, the most distal electrode of a lead is the electrode that is farthest from the lead connector pin. See also *proximal* (3.26).

3.7
fixation zone
zone located on the *lead connector pin* (3.18) and within the *connector cavity* (3.4) where the *lead connector* (3.16) is mechanically secured within the connector cavity

3.8
four-pole
having four poles or electrodes

Note 1 to entry: Generally a four-pole ICD lead has two *low-voltage* (3.21) electrodes and two *high-voltage* (3.12) electrodes. A four-pole low-voltage only lead has four low-voltage electrodes. See also *bipolar* (3.2) and *tripolar* (3.31).

3.9
functional contact zone
zone in the *connector cavity* (3.4) where electrical contact with a *lead connector* (3.16) occurs

3.10
functional seal zone
zone within the *connector cavity* (3.4) where sealing contact with a *lead connector* (3.16) occurs

© ISO 2020 – All rights reserved
Documents
Document Sharing Hub
Full document details: BS ISO 27186:2020

3.11
grip zone
area of the *lead connector* (3.16) which is provided for grasping during insertion and withdrawal of the lead connector from the *connector cavity* (3.4)

3.12
high-voltage
electrical potential greater than 20 V and that can go up to 1 000 V

Note 1 to entry: High-voltages are generally used for defibrillating the heart.

3.13
high-voltage connector
lead connector (3.16) or *connector cavity* (3.4) that has *high-voltage* (3.12) contacts

Note 1 to entry: A high-voltage connector may also contain *low-voltage* (3.21) contacts. See also *low-voltage only connector* (3.22).

3.14
insertion indicator zone
zone on the pin of the *lead connector* (3.16) allocated for manufacturers to provide a visual indicator for use in verifying full insertion of a lead connector into a *connector cavity* (3.4)

3.15
integrated bipolar
two lead poles or *lead electrodes* (3.20) that are electrically common

Note 1 to entry: A typical integrated bipolar ICD lead has a *distal* (3.6) shock electrode that doubles as a *proximal* (3.26) pace/sense ring electrode and is electrically attached to two separate *lead connector contacts* (3.17).

3.16
lead connector
part of a lead that is intended for insertion into the *connector cavity* (3.4) of a *pulse generator* (3.27)

3.17
lead connector contacts
conductive elements on the *lead connector* (3.16) which include the *lead connector pin* (3.18) and *lead connector rings* (3.19)

3.18
lead connector pin
most *proximal* (3.26) conductive element of a *lead connector* (3.16) provided for making electrical contact as well as for securing the lead connector within the *connector cavity* (3.4)

3.19
lead connector ring
annular conductive element on the *lead connector* (3.16) intended for making electrical contact within the *connector cavity* (3.4)

Note 1 to entry: The *four-pole* (3.8) connector has three lead connector rings and a *lead connector pin* (3.18).

3.20
lead electrode
distal (3.6) part of a lead through which electrical impulses are transmitted to or from cardiac tissue

Note 1 to entry: *High-voltage* (3.12) electrodes are capable of delivering high-voltage electrical impulses. *Low-voltage* (3.21) electrodes are used for transmitting and sensing low-voltage impulses and are generally not suitable for delivering high-voltage.

© ISO 2020 – All rights reserved

Documents
Document Sharing Hub
Full document details: BS ISO 27186:2020

3.21
low-voltage
electrical potential less than or equal to 20 volts

Note 1 to entry: Low-voltage is generally used for pacing and sensing the heart. See also *high-voltage* (3.12).

3.22
low-voltage only connector
lead connector (3.16) or *connector cavity* (3.4) that has only *low-voltage* (3.21) contacts

Note 1 to entry: See also *high-voltage connector* (3.13).

3.23
pin visibility zone
zone within the *connector cavity* (3.4) which is allocated for visual verification that the *lead connector* (3.16) is fully inserted

Note 1 to entry: It corresponds to the *insertion indicator zone* (3.14) of the lead connector.

3.24
pristine contact zone
zone on the *lead connector* (3.16) which defines the minimum surface required for making electrical contact with the mating contact in the *connector cavity* (3.4)

Note 1 to entry: The pristine contact zones of the lead connector align with the *functional contact zones* (3.9) of the *connector cavity* (3.4) when the connectors are mated.

3.25
pristine seal zone
zone on the *lead connector* (3.16) which defines the minimum surface required for sealing with the mating seals in the *connector cavity* (3.4)

Note 1 to entry: The pristine seal zones of the lead connector align with the *functional seal zones* (3.10) of the *connector cavity* (3.4) when the connectors are mated.

3.26
proximal
nearest to a point of reference

Note 1 to entry: The point of reference for a lead is the *lead connector pin* (3.18). Therefore, the most proximal electrode of a lead is the electrode closest to the lead connector pin. See also *distal* (3.6).

3.27
pulse generator
device that delivers electrical energy to affect cardiac rhythms

3.28
sealing mechanism
circumferential barriers within the *connector cavity* (3.4) intended to maintain electrical isolation between electrically insulated parts of an assembled and implanted *connector system* (3.3)

3.29
securing mechanism
mechanism within the *connector cavity* (3.4) intended for mechanically securing the *lead connector* (3.16), typically a set screw

© ISO 2020 – All rights reserved
Documents
Document Sharing Hub
Full document details: BS ISO 27186:2020

3.30
strain relief zone
zone on the *lead connector* (3.16) provided for making a gradual transition from a more rigid section to a more flexible section

Note 1 to entry: The gradual transition results in an area over which strain is distributed so that concentrated mechanical forces do not occur when the lead is flexed.

3.31
tripolar
three poles or electrodes

Note 1 to entry: See also *bipolar* (3.2) and *four-pole* (3.8).

4 Requirements

4.1 General

Not all connector features or pulse generator features are specified nor do the requirements in this document address all aspects of functional compatibility, safety or reliability of leads and pulse generators assembled into a system. Each manufacturer is responsible for any requirements and tests necessary to address these as well as the biocompatibility and biostability of their material choices.

The test methods provided for the requirements are type (qualification) tests and are not intended to be used as routine production tests. Alternate test methods may be used, including those which result in equivalent or more stringent test conditions. However, in the event of dispute, the test methods described in this document shall be used.

The following tests should be conducted under ambient conditions unless otherwise specified. Each manufacturer is responsible for any preconditioning required to represent “as-shipped” configurations, as well as for selection of appropriate sample sizes.

Leads and pulse generators marked according to Table 1 and Table 2 shall comply with all requirements in this document.

4.2 Lead connector physical requirements

4.2.1 Dimensions

4.2.1.1 General

Lead connectors shall have the dimensions specified in Figure 1 and Figure 2 and shall meet the requirements outlined in 4.2.1.2 to 4.2.1.11 according to each zone. See Annex O for rationale.

4.2.1.2 Total axial pin movement, *M*

Total axial pin movement is the difference in lead connector pin length from when the connector pin is fully seated against datum A to when the connector pin is fully extended from datum A. Total axial pin movement shall not be greater than 0,25 mm.

4.2.1.3 Pristine contact zones

The minimum length of each of the pristine contact zones shall be 0,90 mm + *M*, where *M* is the total axial pin movement in millimetres.

Lead connectors shall have an electrically conductive contact surface over the entire length of each of the pristine contact zones. Contact surfaces may extend beyond the pristine contact zones.

© ISO 2020 – All rights reserved

Documents
Document Sharing Hub
Full document details: BS ISO 27186:2020

The surface finish in these zones shall be *Ra* 0,8 µm maximum. The entire surface area shall be considered when measuring surface finish. No indentations, protrusions, gaps or steps exceeding surface finish allowance are allowed in these zones.

4.2.1.4 Pristine seal zones

The minimum length of each pristine seal zone shall be 1,81 mm + *M*, where *M* is the total axial pin movement in millimetres.

Lead connectors shall have a seal surface over the entire length of each of the pristine seal zones. Seal surfaces may extend beyond the pristine seal zones. No indentation, protrusions, gaps or steps exceeding surface finish allowance are allowed in these zones.

For surfaces of materials with hardness 75D or less, the surface finish in this zone shall be *Ra* 0,8 µm maximum. The entire surface shall be considered when measuring surface finish except that uniform linear protrusions, such as caused by mould parting lines, may be excluded from the measurement if they do not exceed 0,025 mm in height as measured radially or 0,12 mm in width.

For surfaces in this zone made from materials with hardness above 75D, the surface finish shall be *Ra* 0,4 µm maximum when the entire surface is considered, including any uniform linear protrusions.

4.2.1.5 Lead connector body

The diameter for all conductive components and surfaces within this zone shall be 3,2 mm ± 0,03 mm.

The diameter for all non-conductive components and surfaces within this zone shall be 3,2 mm ± 0,05 mm.

For all areas in this zone except pristine seal zones and pristine contact zones, the following requirements apply.

a) Any radial steps or protrusions, such as can occur between two adjacent components or by welds, shall not exceed 0,05 mm (in height) and shall not cause the diameter to go outside the tolerance specified with the following exception. Uniform linear protrusions that do not exceed 0,025 mm in height as measured radially or 0,12 mm in width are allowed only for surfaces of materials that are at 75 Shore D or below.

b) Any gap shall not exceed 0,1 mm in width when measured to include all edge breaks at the gap edge. There shall not be more than one gap between each pristine zone. For any gap that meets these requirements, the area within the gap need not meet the other requirements of this subclause, for example diameter and radial step requirements.

c) Any indentations, such as holes or weld depressions, shall not exceed 0,5 mm in diameter.

d) Surface finish for zone 3 of Figure 1 shall be *Ra* 0,8 µm maximum from datum A to 16,04 mm and shall be *Ra* 1,6 µm maximum from 16,04 mm to the transition zone 7, excluding the chamfer area. Surface finish measurements need not include any surface features that meet the above requirements 4.2.1.5 a) to c).

4.2.1.6 Strain relief zone

The diameter in this zone shall be 4,1 mm maximum and 3,8 mm minimum.

4.2.1.7 Grip zone

The diameter in this zone shall be 4,3 mm maximum.

© ISO 2020 – All rights reserved
Documents
Document Sharing Hub
Full document details: BS ISO 27186:2020

4.2.1.8 Chamfer zone

The length of the chamfer in this zone shall be 0,35 mm minimally and 0,7 mm – *M* maximally, where *M* is the total axial pin movement in millimetres.

4.2.1.9 Transition zone

The transition between the Ø3,2 mm nominal and the Ø4,1 mm maximum shall occur within the theoretical envelope between datum B, which intersects the Ø4,1 mm at the 17,7 mm dimension, and Datum C.

The diameter in this zone shall not exceed 4,1 mm.

NOTE The 60° dimension defines datum B; transition geometry does not need to match this angle.

4.2.1.10 Insertion indicator zone

This zone is provided for an optional insertion indicator. If an insertion indicator is present it shall meet the following requirements.

a) The indicator shall not extend beyond the zone.

b) The proximal edge shall meet the 5,10 mm ± 0,10 mm dimension.

c) The diameter shall fall within the nominal diameter specified and the tolerance of $\frac{+0{,}03}{-0{,}10}$ mm.

d) Any gaps shall not exceed 0,10 mm in width. For any gap that meets this requirement, the area within the gap need not meet the other requirements of this section, for example diameter and radial step requirements.

e) Any radial steps shall not exceed 0,05 mm.

4.2.1.11 Pin pristine contact zone

Lead connectors shall have an electrical contact surface over the entire length of this zone.

The surface finish in this zone shall be *Ra* 0,8 µm maximum.

© ISO 2020 – All rights reserved

Documents
Document Sharing Hub
Full document details: BS ISO 27186:2020

Dimensions in millimetres

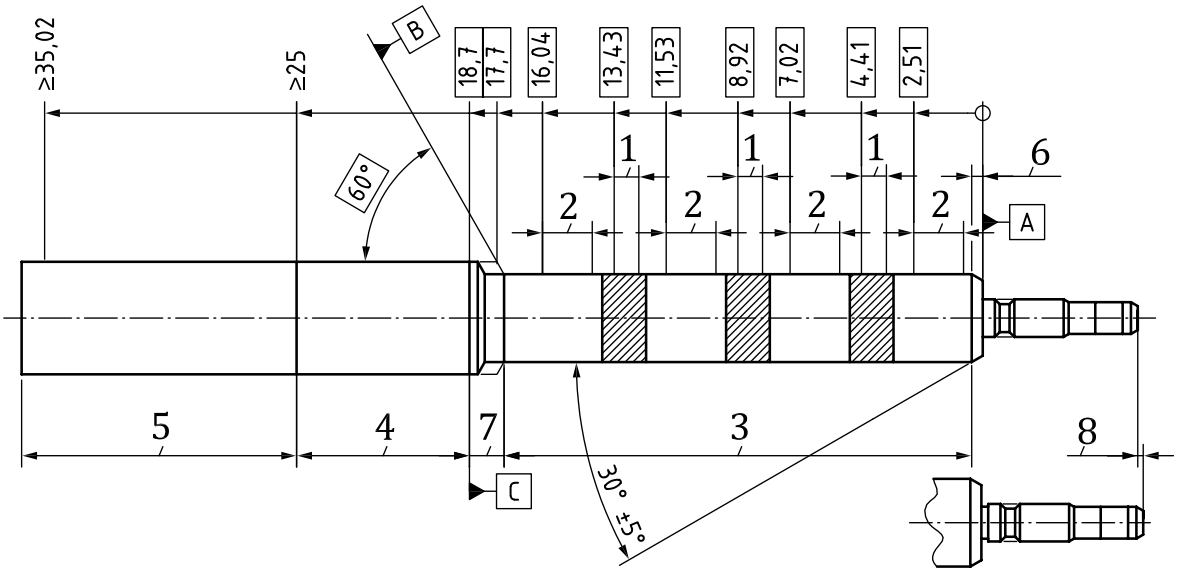

Key

1 pristine contact zones
2 pristine seal zones
3 lead connector body
4 strain relief zone
5 grip zone
6 chamfer zone
7 transition zone
8 total axial pin movement, *M*

NOTE The diameter dimensions of the soft sections, in zone 4, zone 5 and zone 7, of the lead can be determined as the mean value of three measurements taken at locations oriented approximately 120° apart around the principal axis of the lead connector.

Figure 1 — Four-pole lead connector body

© ISO 2020 – All rights reserved
Documents
Document Sharing Hub
Full document details: BS ISO 27186:2020

Dimensions in millimetres

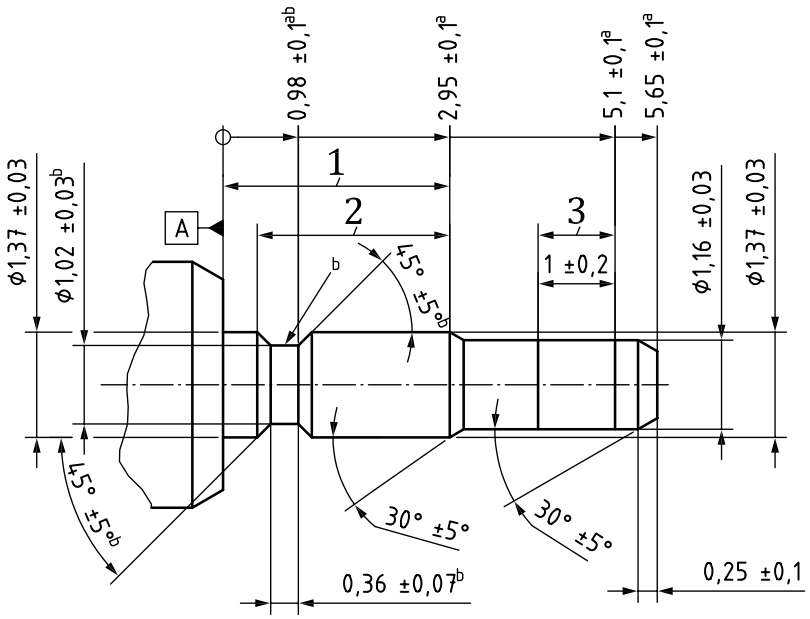

a) High-voltage lead connector pin

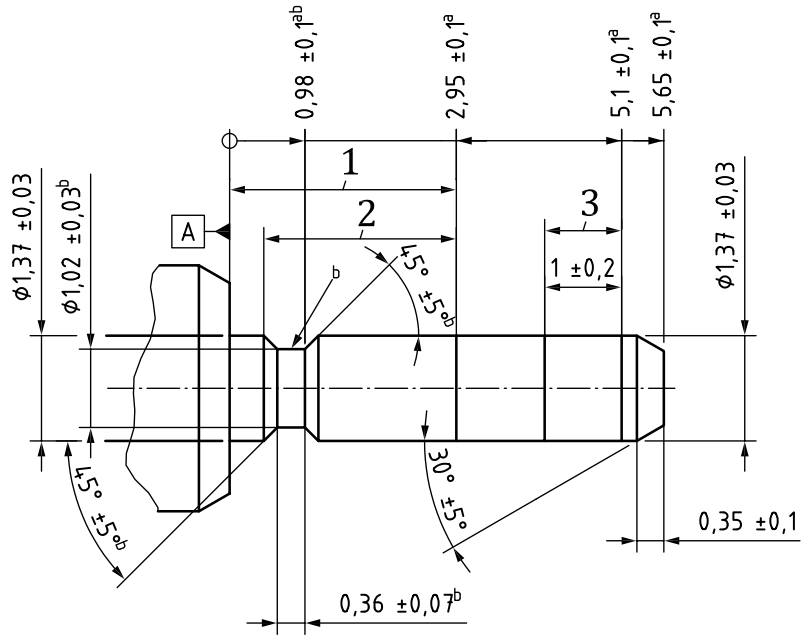

b) Low-voltage only lead connector pin

Key

1 pin fixation zone

2 pin pristine contact zone

3 insertion indicator zone

a Dimension applies only when all axial movement has been biased by seating the connector pin against the connector body.

b Dimension applies to the notch feature. Notch feature is optional and may be omitted.

Figure 2 — Four-pole lead connector high-voltage and low-voltage only pin details

© ISO 2020 – All rights reserved

Documents
Document Sharing Hub
Full document details: BS ISO 27186:2020

4.2.2 Materials

4.2.2.1 Contact materials

Lead connector contact materials shall meet the requirements of Annex M.

Based on observations made during the development of this document, it is recommended that manufacturers consider selecting 35Cobalt-35Nickel-20Chromium-10Molybdenum alloy specified in ASTM F562 as a material for lead connector contacts. This material performed acceptably when evaluated by multiple manufacturers and was more consistent than several other materials tried. Contact material was identified as critical to connector performance and therefore verification to the requirements in this document should be made when using this or any other material.

4.2.2.2 Seal surface material

Lead connector seal zone materials are not specified; however, recommendations are provided in Annex H.

4.2.3 Lead connector electrical connections

4.2.3.1 According to the appropriate configuration, each lead connector contact shall be in electrical continuity with the specific and distinct lead electrode described in Table 1 when the following applies:

— "Low-voltage" refers to stimulating electrodes having pacing and electrogram sensing function;

— "High-voltage" refers to stimulating electrodes having high-voltage defibrillation capability;

— "OPEN" refers to lead connector contacts that are not in electrical continuity with any lead electrode.

Ring 2 and ring 3 contacts of high-voltage lead connectors shall not be in direct electrical continuity with lead electrodes that are not intended for high-voltage because they could be exposed to high voltage during use.

4.2.3.2 The lead connector pin of low-voltage only lead connectors shall conform to Figure 2 b).

4.2.3.3 The lead connector pin of high-voltage lead connectors including integrated bipolar connectors shall conform to Figure 2 a).

4.2.4 Lead marking

4.2.4.1 Marking symbol

Lead connectors shall be marked with the appropriate symbol according to Table 1 and sized appropriately for the component being marked.

4.2.4.2 Marking location

Marking shall be located in the marking zone (see Figure 3).

4.2.4.3 Marking orientation

Marking shall read left to right when the lead connector is oriented with the connector pin to the left.

NOTE It is the responsibility of the manufacturer to ensure marking on lead connectors is permanent and legible under intended use conditions.

© ISO 2020 – All rights reserved
Documents
Document Sharing Hub
Full document details: BS ISO 27186:2020

Dimensions in millimetres

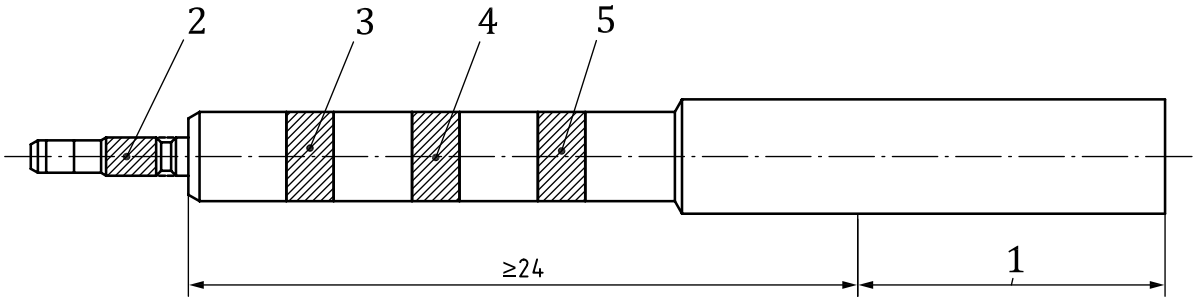

Key

1 marking zone
2 lead connector pin
3 lead connector ring 1
4 lead connector ring 2
5 lead connector ring 3

Figure 3 — Identification of lead connector contacts

Table 1 — Lead marking symbols and electrical connections within the lead — Permitted configurations

	Configuration and marking symbol	Connector pin	Ring 1	Ring 2	Ring 3
Low-voltage only	**IS4-LLLL**	Most distal Low-voltage electrode	2nd most distal Low-voltage electrode	3rd most distal Low-voltage electrode	Most proximal Low-voltage electrode
	IS4-LLLO	Most distal Low-voltage electrode	2nd most distal Low-voltage electrode	3rd most distal Low-voltage electrode	OPEN
	IS4-LOLL	Most distal Low-voltage electrode	OPEN	2nd most distal Low-voltage electrode	Most proximal Low-voltage electrode
High-voltage	**DF4-LLHH**	Most distal Low-voltage electrode	2nd most distal Low-voltage electrode	Most distal High-voltage electrode	Most proximal High-voltage electrode
	DF4-LLHO	Most distal Low-voltage electrode	2nd most distal Low-voltage electrode	Most distal High-voltage electrode	OPEN
	DF4-OOHH	OPEN	OPEN	Most distal High-voltage electrode	Most proximal High-voltage electrode
Integrated bipolar	**DF4-LLHH**	Most distal Low-voltage electrode	Most distal High-voltage electrode[a]	Most distal High-voltage electrode	Most proximal High-voltage electrode
	DF4-LLHO	Most distal Low-voltage electrode	Most distal High-voltage electrode[a]	Most distal High-voltage electrode	OPEN

[a] For integrated bipolar leads, the most distal high-voltage electrode may also be used for low-voltage pacing and sensing function.

© ISO 2020 – All rights reserved

Documents
Document Sharing Hub
Full document details: BS ISO 27186:2020

4.2.5 Lead package labels and literature

Package labels and product literature are the responsibility of the lead manufacturer; however, the appropriate marking symbols shown in Table 1 should be used at all times when referring to lead connectors conforming to this document.

NOTE The four-pole lead connectors specified in this document might not be compatible with the wide variety of existing analyser cables that are currently used with other connectors (such as IS-1 and DF-1). Specifically, the terminals of some analyser cables can result in bridging and shorting of the more closely-spaced lead connector contacts of the four-pole connector. Bridging and shorting during an implant procedure can result in erroneous measurements of performance characteristics (e.g. R waves, P waves, impedances, pacing thresholds) or a temporary inability to provide pacing therapy. Manufacturers are individually responsible for providing appropriate warnings, education or other means of mitigating the risk of bridging and shorting as can occur due to use of analyser cable terminals with their respective lead connectors. See also P.3.

4.3 Lead connector functional requirements

4.3.1 Functional dimensional check

4.3.1.1 Test method

Insert the lead connector into the lead connector go gauge conforming to Figure 4. Perform this test both with the lead connector in an initial state and after a 10 d minimum soak in saline (nominally 9 g/l at 37 °C ± 5 °C).

Dimensions in millimetres

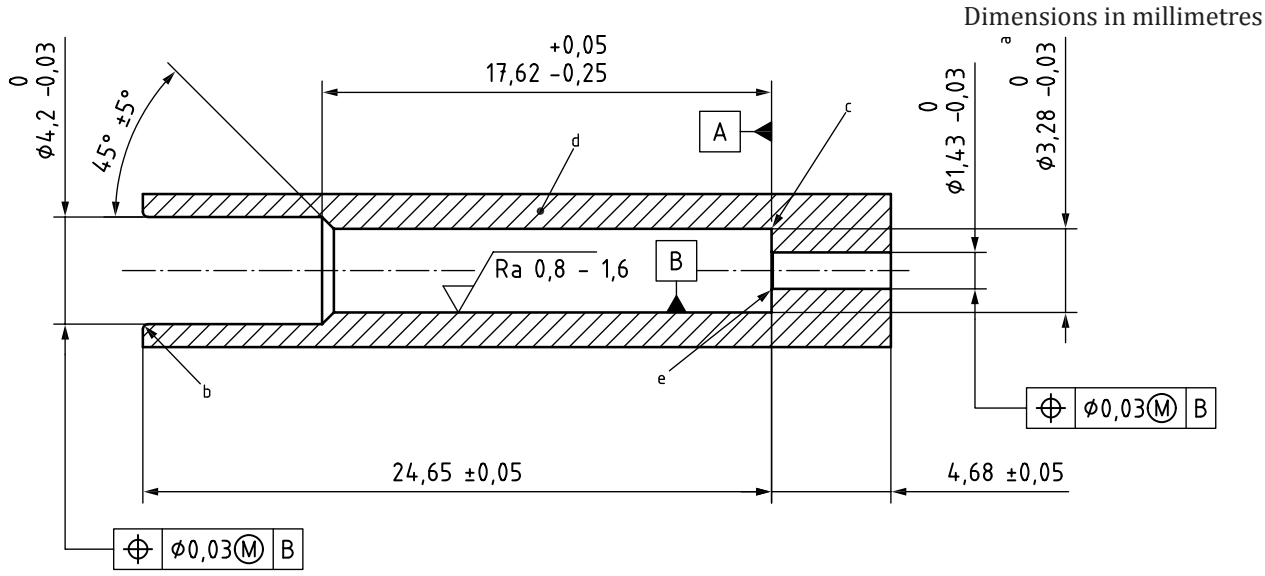

a The 3,28 mm maximum diameter exceeds the largest permissible lead diameter by 0,03 mm to accommodate axis curvature of the lead connector or localized offsets that might be present between lead connector components.

b Radius or chamfer 0,20 mm maximum.

c Radius or chamfer 0,1 mm maximum.

d Material: Steel, Stainless Steel, Titanium, Titanium Alloys or 35Cobalt-35Nickel-20Chromium-10Molybdenum alloy specified in ASTM F562.

e Edge break 0,05 mm maximum.

Figure 4 — Lead connector go gauge

© ISO 2020 – All rights reserved
Documents
Document Sharing Hub
Full document details: BS ISO 27186:2020

4.3.1.2 Requirement

Both initially and after soaking, the force to fully insert the lead connector into the lead connector go gauge shall be less than 4,5 N. The lead connector is considered fully inserted into the gauge when the connector pin is visible outside the 1,43 mm diameter. The lead connector need not be bottomed out in the gauge in order to be considered fully inserted.

4.3.2 Tensile loads

4.3.2.1 Test method

Soak the lead connector in saline (nominally 9 g/l at 37 °C ± 5 °C) for 10 d minimum prior to testing. After soaking and while in a wetted state, fasten the lead connector at the lead connector pin and apply a tensile load of 14 N minimum at the grip zone. Maintain the load for at least 10 s. Repeat tensile loading a minimum of five cycles.

4.3.2.2 Requirement

After tensile loading the lead shall meet the linear dimensions in Figure 1 and Figure 2 measured from datum A and the requirements of 4.2.1.2, 4.3.6, 4.3.7 and 4.3.8.

4.3.3 Deformation due to pin contact forces

4.3.3.1 Test method

Insert the lead connector into a test cavity that conforms to the bore dimensions of Figure 7 a) for high-voltage and Figure 7 b) for low-voltage only and which has M2 screw threads located within the functional pin contact zone. Use an M2 titanium grade 5 as described in ASTM B348, 860 MPa minimum tensile strength, set screw with cup point that complies with ISO 7436.

Tighten the screw to a torque of 0,15 N·m ± 0,01 N·m. Maintain the load for 10 s minimum and then release the set screw.

4.3.3.2 Requirement

The force to withdraw the lead connector from and re-insert it into the test cavity shall not exceed 4,5 N.

After removal, the lead connector shall meet the contact zone diameter requirements in Figure 2.

For lead connector designs utilizing a through-hole for stylets, it is recommended that the manufacturer verify that the through-hole is still functional following application of the set screw load.

NOTE 1 It is recognized that at the time of publication of this document, most manufactured devices utilize 2–56 hexagon head set screws for lead connector retention. Although they are similar in size, the equivalency between the two types of set screw has not been established. Therefore, an M2 set screw is specified herein for use in a dispute.

NOTE 2 Additional testing can be necessary to confirm that the insertion indicator withstands other handling and implant conditions such as attachment of patient cable alligator clips.

4.3.4 Deformation due to ring contact forces

4.3.4.1 Test method

Use two aligned metal blade indenters that conform to Figure 5 to apply a compressive load to the outer diameter of each ring in the pristine contact zone (see Figure 1). Apply a minimum load of 9 N and maintain the load for a minimum of 10 s.

© ISO 2020 – All rights reserved

Documents
Document Sharing Hub
Full document details: BS ISO 27186:2020

Dimensions in millimetres

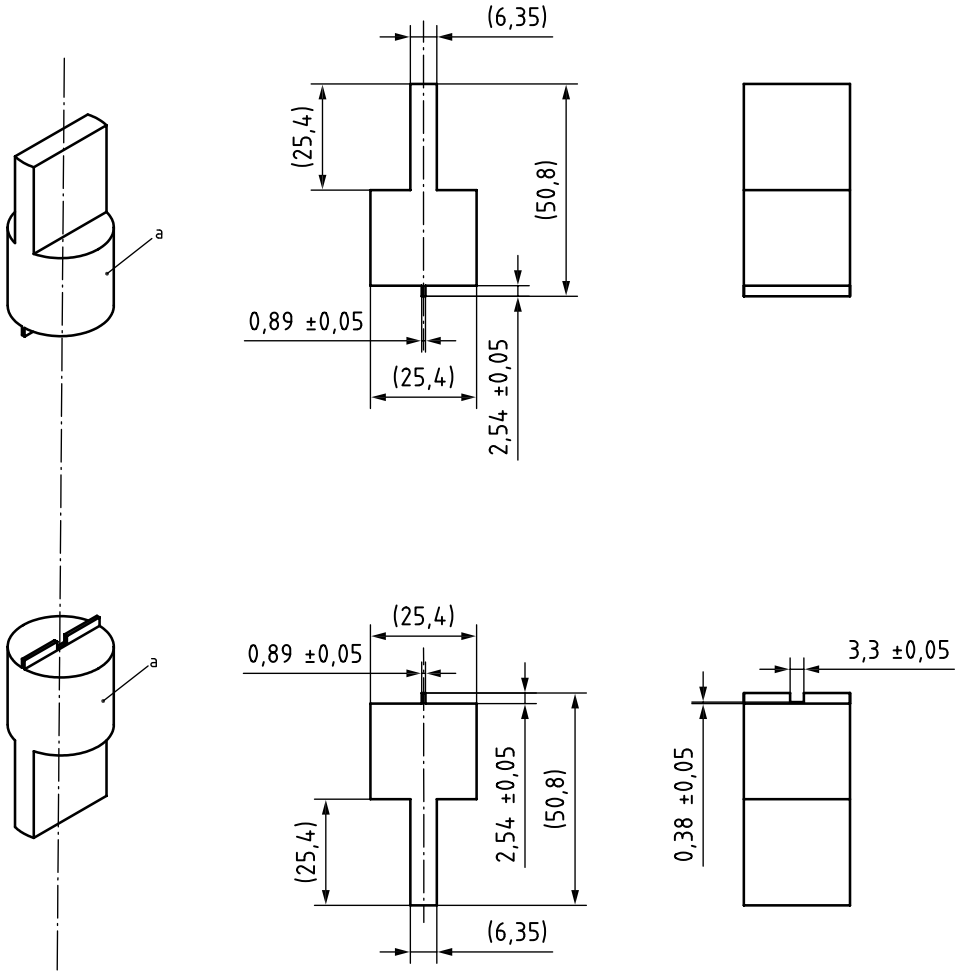

a Material: steel, stainless steel, titanium, titanium alloys or 35Cobalt-35Nickel-20Chromium-10Molybdenum alloy specified in ASTM F562.

Figure 5 — Ring contact force test fixture

4.3.4.2 Requirement

After application and release of the load, the lead connector shall meet the requirements of 4.2.1.5 with the exception of the surface finish requirement, the functional check of 4.3.1 and the electrical requirements of 4.3.6, 4.3.7 and 4.3.8.

4.3.5 Seal zone requirement

There is no functional requirement for seal zones. See Annex H and Annex I for design recommendations.

4.3.6 Electrical isolation requirement

The lead connector shall provide electrical isolation between each of the lead connector contacts and between the contacts and the surrounding fluid. Compliance shall be determined as described in Annex A.

© ISO 2020 – All rights reserved
Documents
Document Sharing Hub
Full document details: BS ISO 27186:2020

4.3.7 Dielectric strength requirement

The lead connector shall provide high-voltage electrical isolation between each of the lead connector contacts and between the contacts and the surrounding fluid. This requirement applies only to high-voltage lead connectors. Compliance shall be determined as described in Annex C (see Annex D for rationale to Annex C).

4.3.8 Current-carrying requirement

The high-voltage lead connectors shall be capable of carrying defibrillation current. Compliance shall be determined as described in Annex E.

4.3.9 Corrosion/environmental

Compliance shall be determined as described in Annex M.

4.4 Connector cavity physical requirements

4.4.1 Dimensions

4.4.1.1 General

The connector cavity shall have the dimensions specified in Figure 6 and Figure 7 and shall meet the following requirements according to each zone.

The connector cavity shall be designed such that it does not make use of the optional notch feature on the lead connector (see Figure 2 note b).

4.4.1.2 Functional contact zones

The electrically active contact surfaces for mating with the lead connector shall be located within the functional contact zones (see Figure 6) and functional pin contact zone (see Figure 7). Contact hardware may extend beyond these zones. Compliance is determined by dimensional measurement of the contact locations when a 3,2 mm ± 0,05 mm diameter pin is installed to deflect the contacts. This requirement does not apply for contacts that are not electrically active.

4.4.1.3 Functional seal zones

Connector cavities shall provide for functional sealing within the functional seal zones (see Figure 6). Seal hardware may extend beyond these zones. Compliance is determined by dimensional measurement of the seal locations when a 3,2 mm ± 0,05 mm diameter pin is installed to deflect the seals.

4.4.1.4 Material

The structural support of the connector cavity shall be constructed of a material with a minimum hardness of 70 Shore D.

© ISO 2020 – All rights reserved

Documents
Document Sharing Hub
Full document details: BS ISO 27186:2020

Dimensions in millimetres

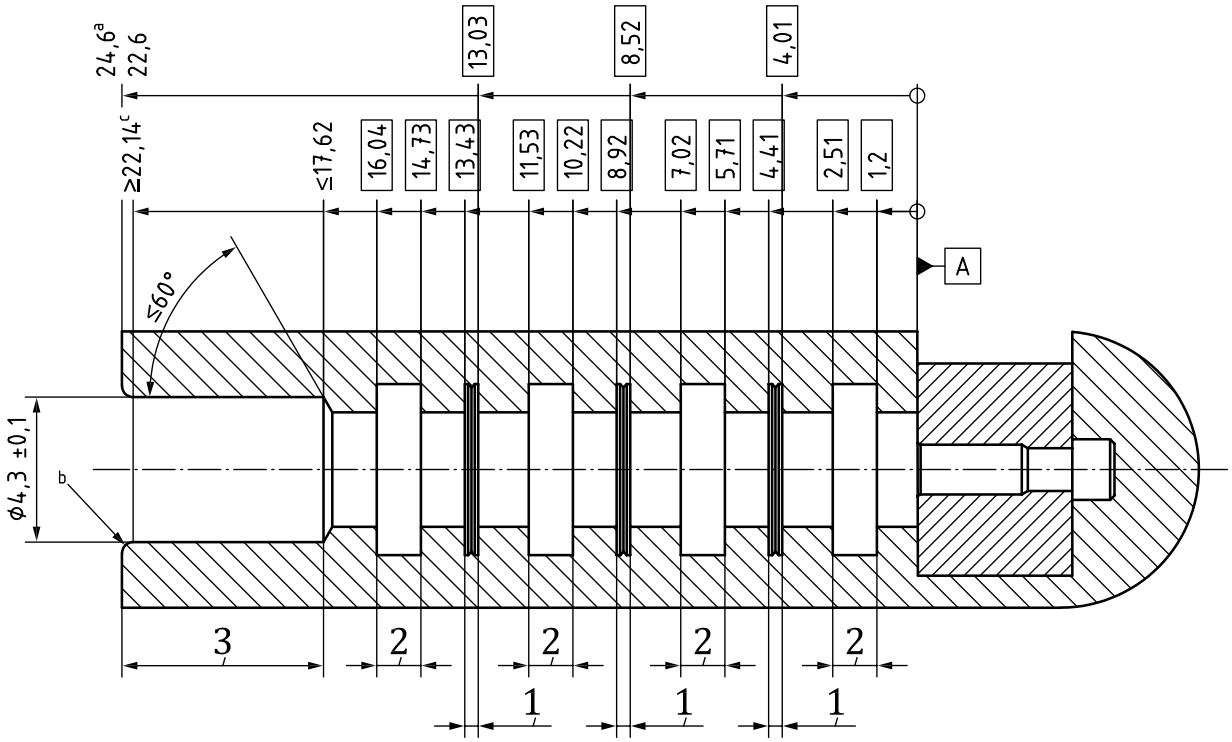

Key

1 functional contact zones

2 functional seal zones

3 stabilization zone

a The surface of the bore entrance need not be perpendicular to the bore axis as long as the entire circumference of the bore entrance is located within the 22,6 mm minimum and 24,6 mm maximum specified.

b Radius or chamfer, 0,2 mm minimum.

c Radius or chamfer shall not start before the 22,14 mm minimum.

Figure 6 — Four-pole connector cavity

© ISO 2020 – All rights reserved

Documents
Document Sharing Hub

Full document details: BS ISO 27186:2020

Dimensions in millimetres

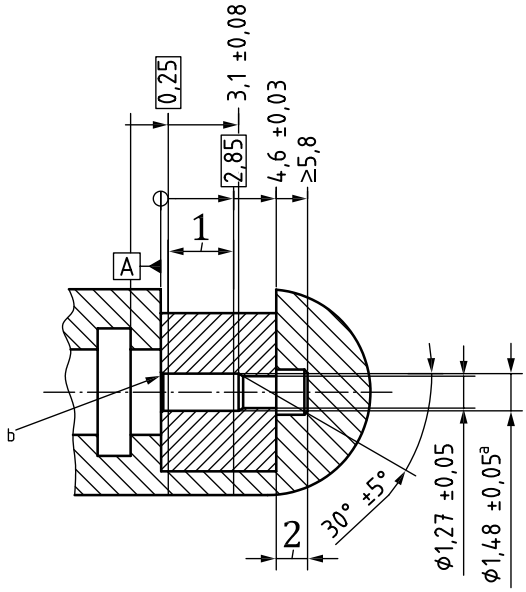

a) High-voltage pin cavity

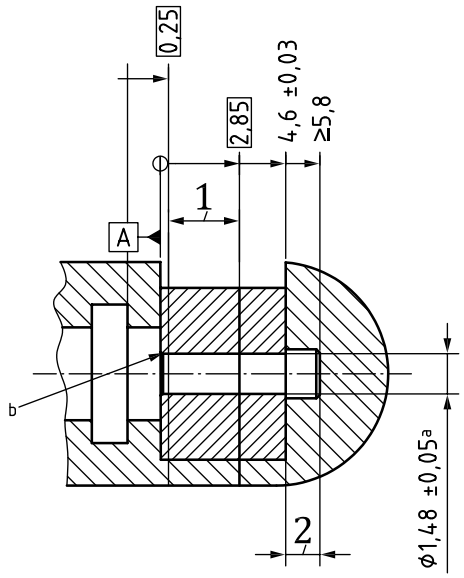

b) Low-voltage only pin cavity

Key

1 functional contact zone

2 pin visibility zone

a Securing mechanisms may have features that are smaller than the 1,48 mm diameter as necessary to secure the lead connector.

b Break edge 0,15 mm maximum.

Figure 7 — Four-pole connector cavity tip detail

© ISO 2020 – All rights reserved

Documents
Document Sharing Hub
Full document details: BS ISO 27186:2020

4.4.2 Connector cavity electrical connections

4.4.2.1 According to the appropriate configuration, each connector cavity contact shall be in electrical continuity with the specific device outputs described in Table 2 when the following applies:

— "LOW" are device outputs less than 20 V;

— "HIGH" are device outputs between 20 V and 1 000 V peak and < 50 A;

— "OPEN" refers to connector cavity contacts that are not in electrical continuity with any device output.

4.4.2.2 Low-voltage only version connector cavities shall conform to Figure 7 b).

4.4.2.3 High-voltage version connector cavities shall conform to Figure 7 a).

NOTE Connector cavity contacts designated as low-voltage are not designed to deliver high-voltage output.

4.4.3 Connector cavity/pulse generator marking

Pulse generators with connector cavities conforming to this document shall be marked with the appropriate symbols in accordance with Table 2 and sized appropriately for the component being marked. See Figure 8 for an illustration of the connector contacts.

NOTE It is the responsibility of the manufacturer to ensure marking on pulse generators is permanent and legible under intended use conditions.

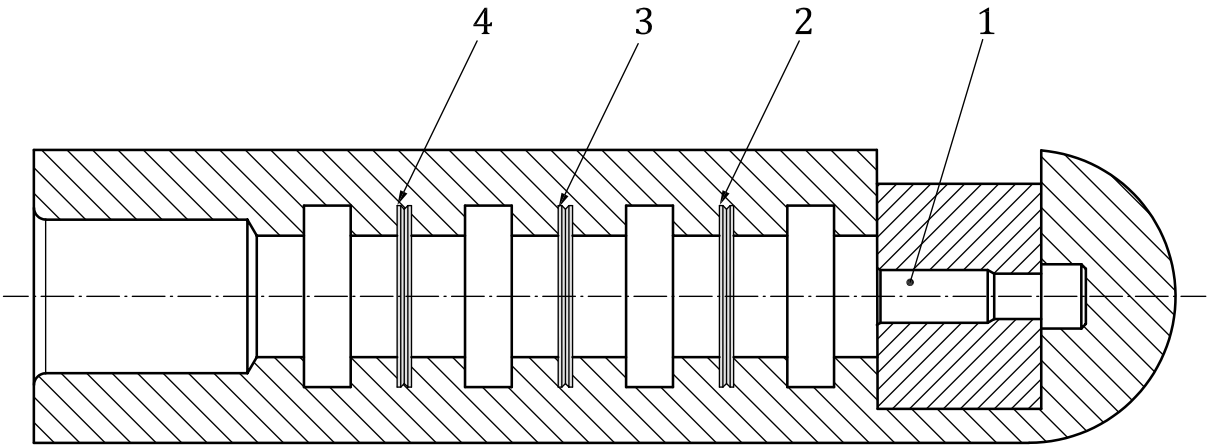

Key

1 pin contact
2 ring 1 contact
3 ring 2 contact
4 ring 3 contact

Figure 8 — Identification of contacts in the connector cavity

Table 2 — Pulse generator marking symbols and electrical connections to device outputs — Permitted configurations

	Configuration and marking symbol	Connector cavity contacts			
		Pin contact	Ring 1 contact	Ring 2 contact	Ring 3 contact
Low-voltage only	IS4-LLLL	LOW	LOW	LOW	LOW
	IS4-LLLO	LOW	LOW	LOW	OPEN
	IS4-LOLL	LOW	OPEN	LOW	LOW

© ISO 2020 – All rights reserved
Documents
Document Sharing Hub
Full document details: BS ISO 27186:2020

Table 2 *(continued)*

	Configuration and marking symbol	Connector cavity contacts			
		Pin contact	Ring 1 contact	Ring 2 contact	Ring 3 contact
High-voltage	DF4-LLHH	LOW	LOW	HIGH	HIGH
	DF4-LLHO	LOW	LOW	HIGH	OPEN
	DF4-OOHH	OPEN	OPEN	HIGH	HIGH

4.4.4 Pulse generator labels and literature

The appropriate marking symbols shown in Table 2 should be used at all times when referring to connectors conforming to this document.

NOTE Package labels and product literature are the responsibility of the pulse generator manufacturer.

4.5 Connector cavity functional requirements

4.5.1 Insertion force

4.5.1.1 Test method

Fully insert the metal gauge pin specified in Figure 9 into the device connector cavity while measuring the maximum force required. Remove the insertion force while monitoring for any displacement of the gauge pin for 15 s minimum.

This test shall be performed in accordance with the manufacturer's recommended implant procedure. This test shall be performed dry.

4.5.1.2 Requirement

The maximum force required to fully insert the gauge pin into the device connector cavity shall not exceed 16 N.

The gauge pin shall not become displaced more than 0,5 mm after the insertion force is removed when verified after 15 s minimum.

© ISO 2020 – All rights reserved

Documents
Document Sharing Hub
Full document details: BS ISO 27186:2020