BS ISO 28902-2:2017

BSI Standards Publication

Air quality — Environmental meteorology

Part 2: Ground-based remote sensing of wind by heterodyne pulsed Doppler lidar

Documents
Document Sharing Hub

Full document details: BS ISO 28902-2:2017

National foreword

This British Standard is the UK implementation of ISO 28902-2:2017.

The UK participation in its preparation was entrusted to Technical Committee EH/2/3, Ambient atmospheres.

A list of organizations represented on this committee can be obtained on request to its secretary.

This publication does not purport to include all the necessary provisions of a contract. Users are responsible for its correct application.

© The British Standards Institution 2017
Published by BSI Standards Limited 2017

ISBN 978 0 580 77339 6

ICS 07.060

Compliance with a British Standard cannot confer immunity from legal obligations.

This Published Document was published under the authority of the Standards Policy and Strategy Committee on 31 August 2017.

Amendments/corrigenda issued since publication

Date	Text affected

Documents
Document Sharing Hub

Full document details: BS ISO 28902-2:2017

INTERNATIONAL STANDARD

ISO 28902-2

First edition
2017-07

Air quality — Environmental meteorology —

Part 2: Ground-based remote sensing of wind by heterodyne pulsed Doppler lidar

Qualité de l'air — Météorologie de l'environnement —

Partie 2: Télédétection du vent par lidar Doppler pulsé hétérodyne basée sur le sol

Reference number
ISO 28902-2:2017(E)

Documents
Document Sharing Hub

© ISO 2017

Full document details: BS ISO 28902-2:2017

COPYRIGHT PROTECTED DOCUMENT

© ISO 2017, Published in Switzerland

All rights reserved. Unless otherwise specified, no part of this publication may be reproduced or utilized otherwise in any form or by any means, electronic or mechanical, including photocopying, or posting on the internet or an intranet, without prior written permission. Permission can be requested from either ISO at the address below or ISO's member body in the country of the requester.

ISO copyright office
Ch. de Blandonnet 8 • CP 401
CH-1214 Vernier, Geneva, Switzerland
Tel. +41 22 749 01 11
Fax +41 22 749 09 47
copyright@iso.org
www.iso.org

© ISO 2017 – All rights reserved

Documents
Document Sharing Hub

Full document details: BS ISO 28902-2:2017

Contents

Page

Foreword ... **iv**

Introduction ... **v**

1 Scope ... **1**

2 Normative references ... **1**

3 Terms and definitions ... **1**

4 Fundamentals of heterodyne pulsed Doppler lidar ... **4**
- 4.1 Overview ... 4
- 4.2 Heterodyne detection ... 5
- 4.3 Spectral analysis ... 7
- 4.4 Target variables ... 10
- 4.5 Sources of noise and uncertainties ... 10
  - 4.5.1 Local oscillator shot noise ... 10
  - 4.5.2 Detector noise ... 11
  - 4.5.3 Relative intensity noise (RIN) ... 11
  - 4.5.4 Speckles ... 11
  - 4.5.5 Laser frequency ... 11
- 4.6 Range assignment ... 11
- 4.7 Known limitations ... 11

5 System specifications and tests ... **12**
- 5.1 System specifications ... 12
  - 5.1.1 Transmitter characteristics ... 12
  - 5.1.2 Transmitter/receiver characteristics ... 13
  - 5.1.3 Signal sampling parameters ... 13
  - 5.1.4 Pointing system characteristics ... 14
- 5.2 Relationship between system characteristics and performance ... 15
  - 5.2.1 Figure of merit ... 15
  - 5.2.2 Time-bandwidth trade-offs ... 16
- 5.3 Precision and availability of measurements ... 17
  - 5.3.1 Radial velocity measurement accuracy ... 17
  - 5.3.2 Data availability ... 17
  - 5.3.3 Maximum operational range ... 17
- 5.4 Testing procedures ... 18
  - 5.4.1 General ... 18
  - 5.4.2 Radial velocity measurement validation ... 18
  - 5.4.3 Assessment of accuracy by intercomparison with other instrumentation ... 20
  - 5.4.4 Maximum operational range validation ... 21

6 Measurement planning and installation instructions ... **23**
- 6.1 Site requirements ... 23
- 6.2 Limiting conditions for general operation ... 23
- 6.3 Maintenance and operational test ... 24
  - 6.3.1 General ... 24
  - 6.3.2 Maintenance ... 24
  - 6.3.3 Operational test ... 24
  - 6.3.4 Uncertainty ... 24

Annex A (informative) **Continuous-wave Doppler wind lidar** ... **26**

Annex B (informative) **Retrieval of the wind vector** ... **27**

Annex C (informative) **Applications** ... **32**

Annex D (informative) **Typical application ranges and corresponding requirements** ... **36**

Bibliography ... **38**

Documents
Document Sharing Hub

© ISO 2017 – All rights reserved

Full document details: BS ISO 28902-2:2017

Foreword

ISO (the International Organization for Standardization) is a worldwide federation of national standards bodies (ISO member bodies). The work of preparing International Standards is normally carried out through ISO technical committees. Each member body interested in a subject for which a technical committee has been established has the right to be represented on that committee. International organizations, governmental and non-governmental, in liaison with ISO, also take part in the work. ISO collaborates closely with the International Electrotechnical Commission (IEC) on all matters of electrotechnical standardization.

The procedures used to develop this document and those intended for its further maintenance are described in the ISO/IEC Directives, Part 1. In particular the different approval criteria needed for the different types of ISO documents should be noted. This document was drafted in accordance with the editorial rules of the ISO/IEC Directives, Part 2 (see www.iso.org/directives).

Attention is drawn to the possibility that some of the elements of this document may be the subject of patent rights. ISO shall not be held responsible for identifying any or all such patent rights. Details of any patent rights identified during the development of the document will be in the Introduction and/or on the ISO list of patent declarations received (see www.iso.org/patents).

Any trade name used in this document is information given for the convenience of users and does not constitute an endorsement.

For an explanation on the voluntary nature of standards, the meaning of ISO specific terms and expressions related to conformity assessment, as well as information about ISO's adherence to the World Trade Organization (WTO) principles in the Technical Barriers to Trade (TBT) see the following URL: www.iso.org/iso/foreword.html.

This document was prepared by Technical Committee ISO/TC 146, *Air quality*, Subcommittee SC 5, *Meteorology*, and by the World Meteorological Organization (WMO) as a common ISO/WMO Standard under the Agreement on Working Arrangements signed between the WMO and ISO in 2008.

A list of all parts in the ISO 28902 series can be found on the ISO website.

© ISO 2017 – All rights reserved
Documents
Document Sharing Hub
Full document details: BS ISO 28902-2:2017

Introduction

Lidars ("light detection and ranging"), standing for atmospheric lidars in the scope of this document have proven to be valuable systems for remote sensing of atmospheric pollutants, of various meteorological parameters such as clouds, aerosols, gases and (where Doppler technology is available) wind. The measurements can be carried out without direct contact and in any direction as electromagnetic radiation is used for sensing the targets. Lidar systems, therefore, supplement the conventional in-situ measurement technology. They are suited for a large number of applications that cannot be adequately performed by using in situ or point measurement methods.

There are several methods by which lidar can be used to measure atmospheric wind. The four most commonly used methods are pulsed and continuous wave coherent Doppler wind lidar, direct-detection Doppler wind lidar and resonance Doppler wind lidar (commonly used for mesospheric sodium layer measurements). For further reading, refer to References [1] and [2].

This document describes the use of heterodyne pulsed Doppler lidar systems. Some general information on continuous-wave Doppler lidar can be found in Annex A. An International Standard on this method is in preparation.

© ISO 2017 – All rights reserved

Documents
Document Sharing Hub
Full document details: BS ISO 28902-2:2017

Documents
Document Sharing Hub

Air quality — Environmental meteorology —

Part 2: Ground-based remote sensing of wind by heterodyne pulsed Doppler lidar

1 Scope

This document specifies the requirements and performance test procedures for heterodyne pulsed Doppler lidar techniques and presents their advantages and limitations. The term "Doppler lidar" used in this document applies solely to heterodyne pulsed lidar systems retrieving wind measurements from the scattering of laser light onto aerosols in the atmosphere. A description of performances and limits are described based on standard atmospheric conditions.

This document describes the determination of the line-of-sight wind velocity (radial wind velocity).

NOTE Derivation of wind vector from individual line-of-sight measurements is not described in this document since it is highly specific to a particular wind lidar configuration. One example of the retrieval of the wind vector can be found in Annex B.

This document does not address the retrieval of the wind vector.

This document may be used for the following application areas:

— meteorological briefing for, e.g. aviation, airport safety, marine applications and oil platforms;

— wind power production, e.g. site assessment and power curve determination;

— routine measurements of wind profiles at meteorological stations;

— air pollution dispersion monitoring;

— industrial risk management (direct data monitoring or by assimilation into micro-scale flow models);

— exchange processes (greenhouse gas emissions).

This document addresses manufacturers of heterodyne pulsed Doppler wind lidars, as well as bodies testing and certifying their conformity. Also, this document provides recommendations for the users to make adequate use of these instruments.

2 Normative references

There are no normative references in this document.

3 Terms and definitions

For the purposes of this document, the following terms and definitions apply.

ISO and IEC maintain terminological databases for use in standardization at the following addresses:

— IEC Electropedia: available at http://www.electropedia.org/

— ISO Online browsing platform: available at http://www.iso.org/obp

© ISO 2017 – All rights reserved

Documents Document Sharing Hub
Full document details: BS ISO 28902-2:2017

3.1
data availability
ratio between the actual considered measurement data with a predefined data quality and the number of expected measurement data for a given *measurement period* (3.10)

3.2
displayed range resolution
constant spatial interval between the centres of two successive *range gates* (3.13)

Note 1 to entry: The displayed range resolution is also the size of a range gate on the display. It is determined by the range gate length and the overlap between successive gates.

3.3
effective range resolution
application-related variable describing an integrated range interval for which the target variable is delivered with a defined uncertainty

[SOURCE: ISO 28902-1:2012, 3.14]

3.4
effective temporal resolution
application-related variable describing an integrated time interval for which the target variable is delivered with a defined uncertainty

[SOURCE: ISO 28902-1:2012, 3.12, modified.]

3.5
extinction coefficient
α
measure of the atmospheric opacity, expressed by the natural logarithm of the ratio of incident light intensity to transmitted light intensity, per unit light path length

[SOURCE: ISO 28902-1:2012, 3.10]

3.6
integration time
time spent in order to derive the line-of-sight velocity

3.7
maximum acquisition range
R_{MaxA}
maximum distance to which the lidar signal is recorded and processed

Note 1 to entry: It depends on the number of acquisition points and the sampling frequency.

3.8
minimum acquisition range
R_{MinA}
minimum distance from which the lidar signal is recorded and processed

Note 1 to entry: If the minimum acquisition range is not given, it is assumed to be zero. It can be different from zero, when the reception is blind during the pulse emission.

3.9
maximum operational range
R_{MaxO}
maximum distance to which a confident wind speed can be derived from the lidar signal

Note 1 to entry: The maximum operational range is less than or equal to the maximum acquisition range.

© ISO 2017 – All rights reserved
Documents
Document Sharing Hub
Full document details: BS ISO 28902-2:2017

Note 2 to entry: The maximum operational range is defined along an axis corresponding to the application. It is measured vertically for vertical wind profiler. It is measured horizontally for scanning lidars able to measure in the full hemisphere.

Note 3 to entry: The maximum operational range can be increased by increasing the measurement period and/or by downgrading the range resolution.

Note 4 to entry: The maximum operational range depends on lidar parameters but also on atmospheric conditions.

3.10
measurement period
interval of time between the first and last measurements

3.11
minimum operational range
R_{MinO}
minimum distance where a confident wind speed can be derived from the lidar signal

Note 1 to entry: The minimum operational range is also called blind range.

Note 2 to entry: In pulsed lidars, the minimum operational range is limited by the stray light in the lidar during pulse emission, by the depth of focus, or by the detector transmitter/receiver switch time. It can depend on pulse duration (T_{p}) and range gate width (RGW).

3.12
physical range resolution
width (full width at half maximum) of the *range weighting function* (3.15)

3.13
range gate
width (FWHM) of the weighting function selecting the points in the time series for spectral processing and wind speed computation

Note 1 to entry: The range gate is centred on the measurement distance.

Note 2 to entry: The range gate is defined in number of bins or equivalent distance range gate.

3.14
range resolution
equipment-related variable describing the shortest range interval from which independent signal information can be obtained

[SOURCE: ISO 28902-1:2012, 3.13]

3.15
range weighting function
weighting function of the radial wind speed along the line of sight

3.16
temporal resolution
equipment-related variable describing the shortest time interval from which independent signal information can be obtained

[SOURCE: ISO 28902-1:2012, 3.11]

3.17
velocity bias
maximum instrumental offset on the velocity measurement

Note 1 to entry: The velocity bias has to be minimized with adequate calibration, for example, on a fixed target.

© ISO 2017 – All rights reserved

Documents
Document Sharing Hub
Full document details: BS ISO 28902-2:2017

3.18
velocity range
range determined by the minimum measurable wind speed, the maximum measurable wind speed and the ability to measure the velocity sign, without ambiguity

Note 1 to entry: Depending on the lidar application, velocity range can be defined on the radial wind velocity (scanning lidars) or on horizontal wind velocities (wind profilers).

3.19
velocity resolution
instrumental velocity standard deviation

Note 1 to entry: The velocity resolution depends on the pulse duration, the carrier-to-noise ratio and integration time.

3.20
wind shear
variation of wind speed across a plane perpendicular to the wind direction

4 Fundamentals of heterodyne pulsed Doppler lidar

4.1 Overview

A pulsed Doppler lidar emits a laser pulse in a narrow laser beam (see Figure 1). As it propagates in the atmosphere, the laser radiation is scattered in all directions by aerosols and molecules. Part of the scattered radiation propagates back to the lidar; it is captured by a telescope, detected and analysed. Since the aerosols and molecules move with the atmosphere, a Doppler shift results in the frequency of the scattered laser light.

At the wavelengths (and thus frequencies) relevant to heterodyne (coherent) Doppler lidar, it is the aerosol signal that provides the principle target for measurement of the backscattered signal.

The analysis aims at measuring the difference, Δf, between the frequencies of the emitted laser pulse, f_t, and of the backscattered light, f_r. According to the Doppler's equation, this difference is proportional to the line-of-sight wind component, as shown in Formula (1):

$$\Delta f = f_r - f_t = -2v_r/\lambda \tag{1}$$

where

λ is the laser wavelength;

v_r is the line-of-sight wind component (component of the wind vector, $\vec{v}$, along the axis of laser beam, counted positive when the wind is blowing away from the lidar).

© ISO 2017 – All rights reserved
Documents
Document Sharing Hub
Full document details: BS ISO 28902-2:2017

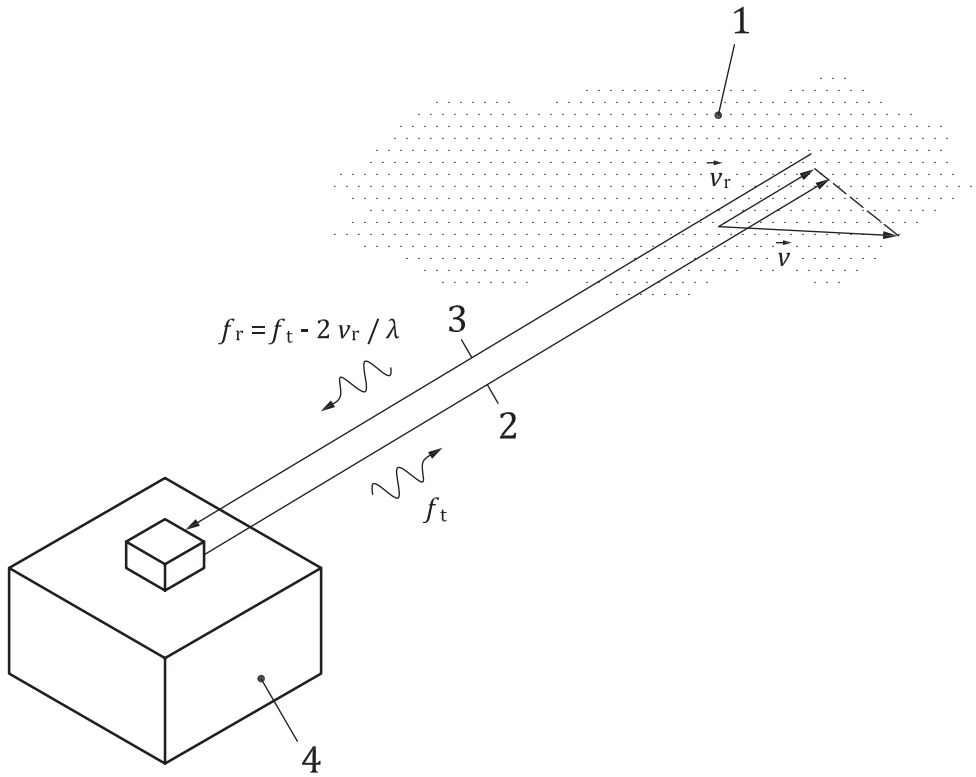

Key

1 scattering particles moving with the wind

2 optical path of the emitted laser pulse (laser beam)

3 optical axis of the receiver

4 lidar instrument

Figure 1 — Measurement principle of a heterodyne Doppler lidar

The measurement is range resolved as the backscattered radiation, received at time t after the emission of the laser pulse, has travelled from the lidar to the aerosols at range x and back to the lidar at the speed of light, c. Formula (2) shows the linear relationship between range and time.

$$x = c \cdot \frac{t}{2} \tag{2}$$

4.2 Heterodyne detection

In a heterodyne lidar, the detection of the light captured by the receiving telescope (at frequency $f_r = f_t + \Delta f$) is described schematically in Figure 2. The received light is mixed with the beam of a highly stable, continuous-wave laser called the local oscillator. The sum of the two electromagnetic waves — backscattered and local oscillator — is converted into an electrical signal by a quadratic detector (producing an electrical current proportional to the power of the electromagnetic wave illuminating its sensitive surface). An analogue high-pass filter is then applied for eliminating the low-frequency components of the signal.

© ISO 2017 – All rights reserved

Documents
Document Sharing Hub
Full document details: BS ISO 28902-2:2017

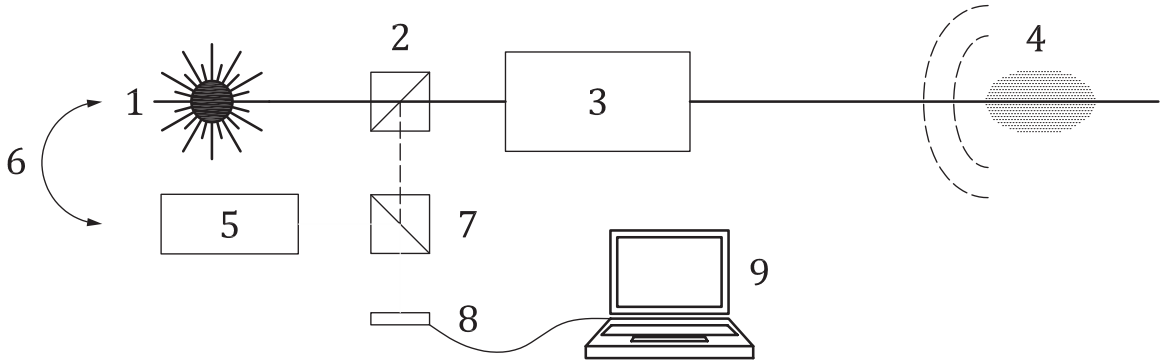

Key

1 pulsed laser
2 optical element separating the received and emitted lights
3 telescope (used for transmitting and receiving)
4 scatterers
5 local oscillator laser (continuous wave laser)
6 frequency control loo (this device sets the difference, $f_t - f_{lo}$)
7 optical element aligning the beam of the local oscillator along the optical axis of the received light beam and mixing them together
8 quadratic detector
9 analogue to digital converter and digital signal processing unit

Figure 2 — Principle of the heterodyne detection

The result is a current, $i(t)$, beating at the radio frequency, $f_t + \Delta f - f_{lo}$:

$$\underbrace{i(t) = 2 \cdot \frac{\eta \cdot e}{h \cdot f_t} \cdot K \cdot \xi(t) \cdot \sqrt{\gamma(t) \cdot P_r(t) \cdot P_{lo}} \cdot \cos\left[2\pi\left(\Delta f + f_t - f_{lo}\right) \cdot t + \varphi(t)\right] + n(t)}_{i_{het}(t)} \quad (3)$$

where

t is the time;

h is the Planck constant;

η is the detector quantum efficiency;

e is the electrical charge of an electron;

K is the instrumental constant taking into account transmission losses through the receiver;

$\xi(t)$ is the random modulation of the signal amplitude by speckles effect (see 4.5.2);

$\gamma(t)$ is the heterodyne efficiency;

$P_r(t)$ is the power of the backscattered light;

P_{lo} is the power of the local oscillator;

f_{lo} is the frequency of the local oscillator;

© ISO 2017 – All rights reserved
Documents
Document Sharing Hub
Full document details: BS ISO 28902-2:2017

$\varphi(t)$ is the random phase;

$n(t)$ is the white detection noise;

$i_{\text{het}}(t)$ is the heterodyne signal.

The heterodyne efficiency, $\gamma(t)$, is a measure for the quality of the optical mixing of the backscattered and the local oscillator wave fields on the surface of the detector. It cannot exceed 1. A good heterodyne efficiency requires a careful sizing and alignment of the local oscillator relative to the backscattered wave. Optimal mixing conditions are discussed in Reference [3]. The heterodyne efficiency is not a purely instrumental function, it also depends on the refractive index turbulence (Cn^2) along the laser beam (see Reference [4]). Under conditions of strong atmospheric turbulence, the effect on varying the refractive index degrades the heterodyne efficiency. This can happen when the lidar is operated close to the ground during a hot sunny day.

In Formula (4), $P_r(t)$ is the instantaneous power of the backscattered light. It is given by the lidar equation (see Reference [3]).

$$P_r(t) = A \cdot \int_0^{+\infty} x^{-2} \cdot G(x) \cdot g\left(t - \frac{2x}{c}\right) \cdot \beta(x) \cdot \tau^2(x)\,\mathrm{d}x \tag{4}$$

with

$$\tau(x) = \exp\left[-\int_0^x \alpha(\zeta)\,\mathrm{d}\zeta\right]$$

where

x is the distance to the lidar;

A is the collecting surface of the receiving telescope;

$G(x)$ is the range-dependent sensitivity function ($0 \le G(x) \le 1$) taking into account, e.g. the attenuation of the receiver efficiency at short range to avoid the saturation of the detector;

$g(t)$ is the envelope of the laser pulse power ($\int g(t)\,\mathrm{d}t = E_0$, with E_0 as the energy of the laser pulse);

$\beta(x)$ is the backscatter coefficient of the probed atmospheric target;

$\tau(x)$ is the atmospheric transmission as a function of the extinction coefficient, α.

4.3 Spectral analysis

The retrieval of the radial velocity measurement from heterodyne signals requires a frequency analysis. This is done in the digital domain after analog-to-digital conversion of the heterodyne signals. An overview of the processing is given in Figure 3. The frequency analysis is applied to a time window (t, $t + \Delta t$) and is repeated for a number, N, of lidar pulses. The window defines a range gate (x, $x + \Delta x$) with $x = c \cdot t/2$ and $\Delta x = c \cdot \Delta t/2$. N is linked to the integration time, $t_{\text{int}} = 1/f_{\text{PRF}}$, of the measurement ($f_{\text{PRF}}$ is the pulse repetition frequency). The signal analysis consists in averaging the power density functions of the range gated signals. A frequency estimator is then used for estimating the central frequency of the signal peak. It is an estimate, $\hat{f}_{\text{het}}$, or the frequency, $f_{\text{het}} = \Delta f + f_t - f_{\text{lo}}$, of the heterodyne signal (see Figure 3).

Due to the analog-to-digital conversion, the frequency interval resolved by the frequency analysis is limited to $(0, +F_s/2)$ or $(-F_s/2, +F_s/2)$ for complex valued signals. This limits the minimum and maximum

© ISO 2017 – All rights reserved

Documents
Document Sharing Hub
Full document details: BS ISO 28902-2:2017