BS ISO 29281:2011

BSI Standards Publication

Intelligent transport systems — Communications access for land mobiles (CALM) — Non-IP networking

bsi.

...making excellence a habit.™

Document Sharing Hub

Full document details: BS ISO 29281:2011

National foreword

This British Standard is the UK implementation of ISO 29281:2011.

The UK participation in its preparation was entrusted to Technical Committee EPL/278, Road transport informatics.

A list of organizations represented on this committee can be obtained on request to its secretary.

This publication does not purport to include all the necessary provisions of a contract. Users are responsible for its correct application.

© BSI 2011

ISBN 978 0 580 63573 1

ICS 03.220.01; 35.240.60

Compliance with a British Standard cannot confer immunity from legal obligations.

This British Standard was published under the authority of the Standards Policy and Strategy Committee on 30 April 2011.

Amendments issued since publication

Date	Text affected

Documents
Document Sharing Hub

Full document details: BS ISO 29281:2011

INTERNATIONAL STANDARD

ISO 29281

First edition
2011-04-01

Intelligent transport systems — Communications access for land mobiles (CALM) — Non-IP networking

Systèmes intelligents de transport — Accès aux communications des services mobiles terrestres (CALM) — Réseautique non-IP

Reference number
ISO 29281:2011(E)

Documents
Document Sharing Hub

© ISO 2011

Full document details: BS ISO 29281:2011

COPYRIGHT PROTECTED DOCUMENT

© ISO 2011

All rights reserved. Unless otherwise specified, no part of this publication may be reproduced or utilized in any form or by any means, electronic or mechanical, including photocopying and microfilm, without permission in writing from either ISO at the address below or ISO's member body in the country of the requester.

ISO copyright office
Case postale 56 • CH-1211 Geneva 20
Tel. + 41 22 749 01 11
Fax + 41 22 749 09 47
E-mail copyright@iso.org
Web www.iso.org

Published in Switzerland

Documents
Document Sharing Hub
© ISO 2011 – All rights reserved

Full document details: BS ISO 29281:2011

Contents

Page

Foreword v
Introduction vi
1 Scope 1
2 Normative references 1
3 Terms and definitions 2
4 Symbols and abbreviated terms 3
5 Requirements 4
6 Overview 4
6.1 ITS-S architecture 4
6.2 Services 4
6.2.1 Types of services 4
6.2.2 Legacy CIs 5
6.2.3 15628 applications 6
6.3 Communication scenarios 7
6.3.1 General 7
6.3.2 Single-hop communication scenario 7
6.3.3 Multi-hop communication scenarios 8
6.4 Groupcasting 8
6.5 Networking & transport layer protocols 10
6.6 Management of ITS-S communication layers 11
6.7 FAST implementation architectures 11
7 Networking & transport layer protocols 12
7.1 Basics 12
7.2 FAST networking & transport layer protocols 12
7.2.1 Elements and basic procedures 12
7.2.2 Initial settings of forwarding tables in host ITS-SCUs 15
7.2.3 Initial settings of forwarding tables in router ITS-SCUs 16
7.2.4 Maintenance of forwarding tables for FAST ITS service initialization 18
7.2.5 CIP header 18
7.2.6 Transmitting packets 19
7.2.7 Receiving packets 19
7.2.8 Local packet forwarding between ITS-SCUs 20
7.2.9 Local IPv6 service initialization 21
7.2.10 Management 21
7.2.11 NF-SAP 22
7.3 FAST networking & transport layer protocol extension 25
7.3.1 Introduction 25
7.3.2 NF-SAP 25
7.3.3 Header 27
7.3.4 Multi-hop broadcast 28
7.3.5 Local Port Protocol 28
7.4 ITS-MUX 29
7.4.1 Functionality 29
7.4.2 ITS-MUX NPDU 30
7.4.3 Procedures 31
8 Facilities layer protocols 31
8.1 General 31
8.2 Groupcast registration handler 31

Documents
Document Sharing Hub

© ISO 2011 – All rights reserved

Full document details: BS ISO 29281:2011

8.3 Repetitive packet transmission handler ... 31
8.4 Legacy CI Port Manager ... 31
8.5 15628 Kernel Emulator ... 32
8.5.1 15628 legacy applications ... 32
8.5.2 CI classes ... 32
8.5.3 Registration of 15628 applications ... 32
8.5.4 Operation phase ... 33
8.6 Basic primitive application functions ... 34

9 Common elements and procedures ... 34
9.1 CIP management ... 34
9.2 NF-SAP ... 36
9.3 MN-SAP ... 36

10 Conformance ... 36

11 Test methods ... 36

Annex A (normative) **ASN.1 definitions** ... 37

Annex B (normative) **15628 legacy CI** ... 41

Annex C (informative) **FAST networking & transport layer protocol examples** ... 47

Annex D (informative) **15628 legacy service guidelines** ... 66

Bibliography ... 76

© ISO 2011 – All rights reserved

Documents
Document Sharing Hub
Full document details: BS ISO 29281:2011

Foreword

ISO (the International Organization for Standardization) is a worldwide federation of national standards bodies (ISO member bodies). The work of preparing International Standards is normally carried out through ISO technical committees. Each member body interested in a subject for which a technical committee has been established has the right to be represented on that committee. International organizations, governmental and non-governmental, in liaison with ISO, also take part in the work. ISO collaborates closely with the International Electrotechnical Commission (IEC) on all matters of electrotechnical standardization.

International Standards are drafted in accordance with the rules given in the ISO/IEC Directives, Part 2.

The main task of technical committees is to prepare International Standards. Draft International Standards adopted by the technical committees are circulated to the member bodies for voting. Publication as an International Standard requires approval by at least 75 % of the member bodies casting a vote.

Attention is drawn to the possibility that some of the elements of this document may be the subject of patent rights. ISO shall not be held responsible for identifying any or all such patent rights.

ISO 29281 was prepared by Technical Committee ISO/TC 204, *Intelligent transport systems*.

Documents
Document Sharing Hub

© ISO 2011 – All rights reserved

Full document details: BS ISO 29281:2011

Introduction

This International Standard is part of a family of International Standards based on the communications access for land mobiles (CALM) concept. These International Standards specify a common architecture (see ISO 21217), network protocols and communication interface definitions for wired and wireless communications using various access technologies including cellular 2nd generation, cellular 3rd generation, satellite, infra-red, 5 GHz microwave, 60 GHz millimetre-wave and mobile wireless broadband. These and other access technologies that can be incorporated are designed to provide broadcast, unicast and multicast communications between mobile stations, between mobile and fixed stations and between fixed stations in the intelligent transport systems (ITS) sector.

A fundamental advantage of the CALM concept over traditional systems is that applications are abstracted from the access technologies that provide the wireless connectivity and the networks that transport the information from the source to the destination(s). This means that ITS stations are not limited to a single access technology and networking protocol and can implement any of those supported, and the ITS station management can make optimal use of all these resources. To exploit this flexibility, CALM-complaint systems may support handover of different types including

— those involving a change of communication interface without a change of access technology,

— those involving a change of communication interface with a change of access technology,

— those involving reconfiguration or change of the network employed to provide connectivity, and

— those involving both a change in communication interface and network reconfiguration.

A detailed introduction to the CALM family of International Standards is provided in ISO 21217.

There are applications and services in the ITS sector that are not well suited to IPv6 networking. Due to the rapidly changing topologies that can be encountered in ITS communications and the importance of physical location in some circumstances, networking & transport layer protocols specifically designed for efficiency (low-overhead, rapid initialization, etc.) and others based on geo-addressing and multi-hopping mechanisms are necessary to enable a much larger class of applications and services than would be possible with only IP networking. Examples of such applications include

— time-critical vehicle and road safety,

— road traffic efficiency,

— road tolling,

— access control, and

— commercial services.

This International Standard focuses on non-IP operations and contains specifications for the ITS station facilities layer and the non-IP networking & transport layer, which complements the IPv6 specifications given in ISO 21210.

© ISO 2011 – All rights reserved
Documents
Document Sharing Hub
Full document details: BS ISO 29281:2011

INTERNATIONAL STANDARD ISO 29281:2011(E)

Intelligent transport systems — Communications access for land mobiles (CALM) — Non-IP networking

1 Scope

This International Standards specifies FAST services, i.e.

— FAST networking & transport layer protocols for

  — single-hop communications,

  — N-hop broadcast communications,

  — ITS-MUX, and

  — ITS station-internal forwarding,

— FAST service for 15628 CI (DSRC CI) support,

— FAST service for 15628 application support,

and the related support of the MN-SAP and MF-SAP.

This International Standard references ISO 24102 for related specifications of

— FAST ITS service announcement, and

— groupcast management.

NOTE Formerly “FAST ITS service announcement” was referred to as “FAST service advertisement”. The name is being changed in order to align with terminology specified in ISO 21217.

Wherever practicable, this International Standard has been developed by reference to suitable extant standards, adopted by selection.

2 Normative references

The following referenced documents are indispensable for the application of this document. For dated references, only the edition cited applies. For undated references, the latest edition of the referenced document (including any amendments) applies.

ISO/IEC 8825-2, *Information technology — ASN.1 encoding rules: Specification of Packed Encoding Rules (PER)*

ISO 15628:2007, *Road transport and traffic telematics — Dedicated short range communication (DSRC) — DSRC application layer*

ISO 21210, *Intelligent transport systems — Communications access for land mobiles (CALM) — IPv6 Networking*

Documents
Document Sharing Hub

© ISO 2011 – All rights reserved

Full document details: BS ISO 29281:2011

ISO 21215, *Intelligent transport systems — Communications access for land mobiles (CALM) — M5*

ISO 21217, *Intelligent transport systems — Communications access for land mobiles (CALM) — Architecture*

ISO 21218, *Intelligent transport systems — Communications access for land mobiles (CALM) — Medium service access points*

ISO 24102, *Intelligent transport systems — Communications access for land mobiles (CALM) — Management*

ISO 24103, *Intelligent transport systems — Communications access for land mobiles (CALM) — Media adapted interface layer (MAIL)*

ARIB STD-T88, DSRC application sub-layer

3 Terms and definitions

For the purposes of this document, the terms and definitions given in ISO 21217, ISO 21218, ISO 21210, ISO 24102, ISO 24103 and the following apply.

3.1
ITS station information
information on the identity, location and movement of an ITS station together with a time stamp

3.2
forwarding data
information received in a network node, optionally evaluated, modified and amended, and finally retransmitted, without involvement of an ITS-S application

3.3
ITS FAST service provider
entity using an ITS-S application (e.g. referred to as server application) in order to provide an ITS service to an ITS FAST service user, initiating and controlling communications for the transmission/exchange of packets with the FAST networking & transport layer protocol

3.4
ITS FAST service user
entity using an ITS-S applications (e.g. referred to as client application) in order to consume an ITS service offered by an ITS FAST service provider entity, where the ITS-S applications of the ITS FAST service provider and ITS FAST service user are complementary parts of the same ITS application

3.5
FAST ITS service
service offered by an ITS FAST service provider, by means of an ITS-S application (e.g. referred to as server application) residing in one ITS station, to the ITS FAST service user applying the complementary ITS-S application (e.g. referred to as client application) residing in another ITS station, which implies at least transmission of a single message or an exchange of messages between these ITS-S applications applying the FAST networking & transport layer protocol

3.6
GeoNetworking
networking functionality based on the geographic coordinates of the transmitter location and a geographic description of the destination

3.7
NWref handler
functionality to handle assignment and usage of NWref numbers

© ISO 2011 – All rights reserved
Documents
Document Sharing Hub
Full document details: BS ISO 29281:2011

3.8
Host ITS-SCU
ITS-SCU containing the functionality of an ITS-S host

3.9
Router ITS-SCU
ITS-SCU containing the functionality of an ITS-S router

3.10
FAST basic header
header of the FAST networking & transport layer protocol supporting its basic functionality

3.11
FAST extension header
additional header of the FAST networking & transport layer protocol appended to the FAST basic header, supporting its extended functionality

3.12
FAST forwarding header
header of the FAST networking & transport layer protocol replacing the FAST basic header for ITS station-internal forwarding of packets

3.13
FAST ITS service announcement
ITS service announcement using the FAST networking & transport layer protocol as specified in ISO 24102

4 Symbols and abbreviated terms

Symbols and abbreviated terms used in this International Standard are listed below. Reference should also be made to ISO 21217, ISO 21210, ISO 21215, ISO 21218, ISO 24102 and ISO 24103.

CIP	CI Parameters
CIP0	LSB of CIP reference
CIP1	Middle bit of CIP reference
CIP2	MSB of CIP reference
ELCP	Extended Link Control Protocol
ETC	Electronic Toll Collection
ITSSI	ITS Station Information
LCP	LAN Control Protocol
LPCP	Local Port Control Protocol
LPP	Local Port Protocol
NWref	Network reference
OBE	On-board equipment
SAF	Service Advertisement Frame

© ISO 2011 – All rights reserved

Documents
Document Sharing Hub
Full document details: BS ISO 29281:2011

SCF	Service Context Frame
SID	Service Identifier
STA	Service Table for Advertisement
HMI	Human–Machine Interface

5 Requirements

The principal requirements of this International Standard are specified in Clauses 6, 7, 8 and 9 as follows:

— Clause 6 gives an overview of the functionalities specified in this International Standard;

— Clause 7 specifies protocols of the networking & transport layer;

— Clause 8 specifies protocols of the facilities layer;

— Clause 9 specifies common elements and procedures.

Clauses 10 and 11 are related to conformance declaration and testing.

Annexes provide further normative and informative details related to the principal requirements.

6 Overview

6.1 ITS-S architecture

The specifications given in this International Standard shall comply with the ITS station architecture and with the concept of an ITS station communication unit (ITS-SCU) as specified in ISO 21217 and ISO 24102.

NOTE The terminology from the series of International Standards on CALM was modified during the process of harmonization of the standards. ITS-SCU (ITS-S communication unit) was formerly referred to as “CALM communication kernel” (CCK).

6.2 Services

6.2.1 Types of services

This International Standard specifies ITS-S FAST services:

a) protocols in the networking & transport layer for

   1) single-hop communications,

   2) N-hop broadcast communications,

   3) ITS-MUX, and

   4) ITS station-internal forwarding;

b) 15628 CI (DSRC CI) support;

c) 15628 application support;

d) ITS service announcement (specification is done by reference to ISO 24102).

© ISO 2011 – All rights reserved
Documents
Document Sharing Hub
Full document details: BS ISO 29281:2011

ITS-S FAST services located in the facilities layer are offered to ITS-S applications designed to use the FAST protocols in the ITS-S networking & transport layer.

An example of an ITS-S FAST service is the “FAST ITS service announcement” specified in ISO 24102. It is a protocol optimized for low latency and single-hop communications. It is based on groupcasting and the FAST networking & transport protocol as specified in this International Standard. FAST ITS service announcement also includes announcement of locally available IPv6-based services.

6.2.2 Legacy CIs

An existing access layer technology may be implemented in a ITS station as a “Legacy CI”, as presented in Figure 1, such that it can communicate with peer stations that are not necessarily aware of any ITS-S context, and where none of the networking protocols specified for ITS-S are used in the wireless link.

Types of CIs are specified in ISO 21218 in MI-parameter 22 “Medium”. The only legacy CI medium identified so far in ISO 21218 is 128 “ISO 15628”. Further types may be added.

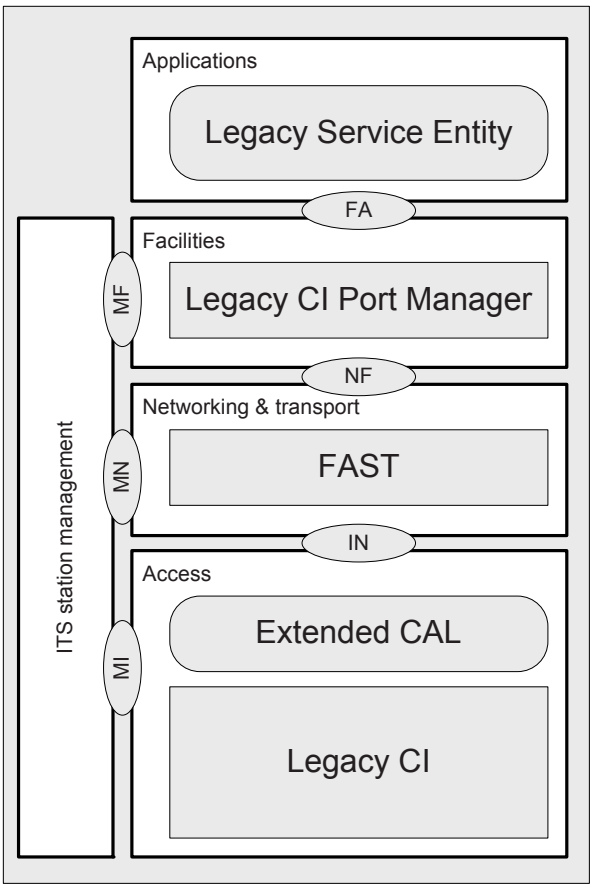

Figure 1 — Legacy CI

Inside the ITS station, the FAST networking & transport layer protocol shall be used for the forwarding of packets between the access layer and the facilities layer.

This requires

— implementing a CALM adaptation layer (CAL) as specified in ISO 21218, extended with the additional functionality for FAST networking & transport layer support as specified in this International Standard, which, optionally, may also include parts of the service processing functionality,

— making use of the “Legacy CI Port Manager” as specified in this International Standard and in ISO 24102.

© ISO 2011 – All rights reserved

Documents
Document Sharing Hub
Full document details: BS ISO 29281:2011

Legacy CIs shall specify the medium specific parameters presented in Table 1 (see ISO 21218 for the MI parameter 254 “MediumParameter”):

Table 1 — Legacy CI parameters

MediumParam.mediumPar.no	MediumParam.detail	Description
0	LegacyOption	Optional classification of different options of the same legacy CI
1	NWrefPM	NWref of the “Legacy CI Port Manager” connecting to the applicable “Legacy Service Entity”

The “Legacy Service Entity” shall register at the “Legacy CI Port Manager” indicating the CI class and legacy option of the required legacy CI.

Further details depend on the existing communication interface technology. Normative examples for legacy systems compliant with ISO 15628:2007 are provided in Annex B.

6.2.3 15628 applications

Applications built on top of an OSI layer 7, as specified in ISO 15628:2007 may be operated over an ITS CI of CI class CIC-wl1, specified in ISO 21218. The services shall interface with the FAST networking & transport layer protocol via the “15628 Kernel Emulator” (see Figure 2).

NOTE In the given context, 15628 applications are also referred to as 15628 legacy applications.

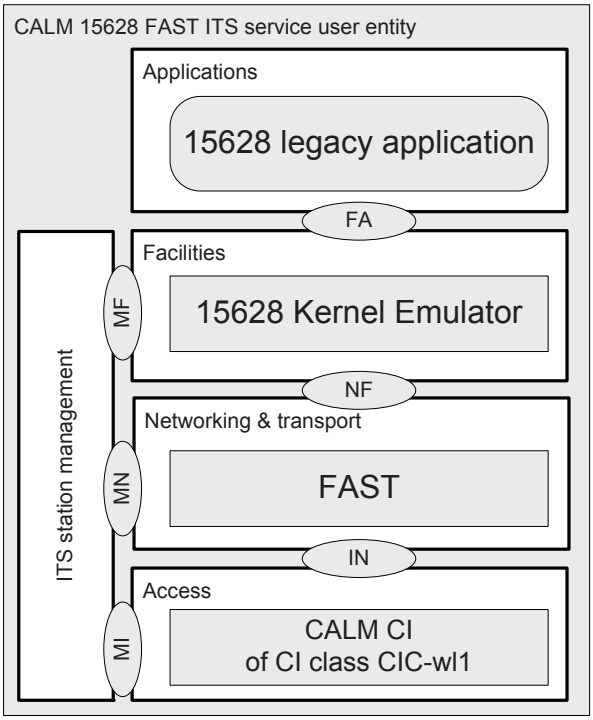

Figure 2 — 15628 legacy service

© ISO 2011 – All rights reserved
Documents
Document Sharing Hub
Full document details: BS ISO 29281:2011

The 15628 initialization phase shall be implemented with the groupcast functionality specified in this International Standard and in ISO 24102.

The “15628 Kernel Emulator” shall perform the following tasks:

— register at server groupcast manager for periodic transmission of BST, if applicable;

— register at client groupcast manager for transmission of VST, if applicable;

— emulate the 15628 T-Kernel interface for usage by applications;

— map the 15628 “FlowControl” on BC-VCI and UC-VCI.

The purpose of 15628 LID shall be served by CI-ID.

Detailed procedures are specified in Clause 8.

6.3 Communication scenarios

6.3.1 General

The protocols of the ITS-S networking & transport layer specified in this International Standard apply to two basic communication scenarios:

— single-hop communications between ITS stations, regardless of where the stations are installed;

— multi-hop communications between ITS stations.

Subsequent hops may be managed either by services or by network/transport protocol extensions.

6.3.2 Single-hop communication scenario

Single-hop communications as specified in this International Standard involves communication between two ITS stations as described in ISO 21217.

Examples of single-hop communication scenarios are illustrated in Figure 3.

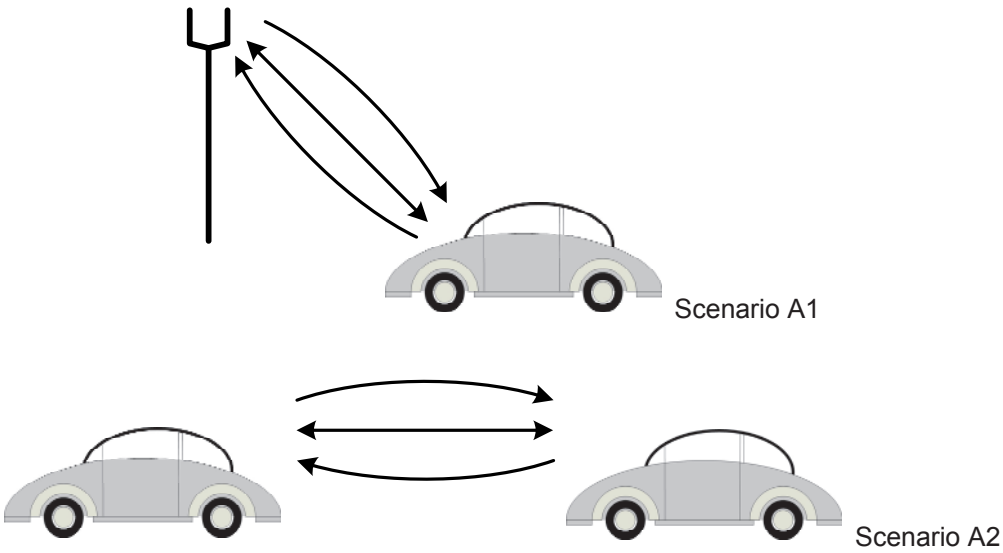

Figure 3 — Examples of single-hop communications

© ISO 2011 – All rights reserved

Documents
Document Sharing Hub
Full document details: BS ISO 29281:2011

Scenario A1 is a typical scenario for anouncement of ITS services provided by roadside service providers. Further on, this is needed for traffic efficiency and road safety services.

Scenario A2 mainly is for road safety and traffic efficiency services.

6.3.3 Multi-hop communication scenarios

Multi-hop communications as specified in this International Standard involves communication between two ITS stations using forwarding capabilities provided by one or more other ITS stations.

Multi-hop (N-hop) communications is supported, for example, by the GeoNetworking protocol currently being developed at ETSI, which is based on the geo-address information of stations, and by the FAST networking & transport layer protocol specified in this International Standard.

NOTE A new work item at ISO/TC204/WG16 is developing an International Standard on how to apply GeoNetworking in an ITS station compliant with CALM. The development of GeoNetworking protocols at ETSI is based on the results of the GeoNet project funded by the European Commission (see Reference [7]).

N-hop broadcast was presented in Reference [1] and named “Topologically Scoped Broadcast”. An example of N-hop broadcast is illustrated in Figure 4. It provides data dissemination from a source node to all nodes reachable with a limited number of subsequent hops. The number of subsequent hops shall be set by the service. In Figure 4 the maximum number of hops is two.

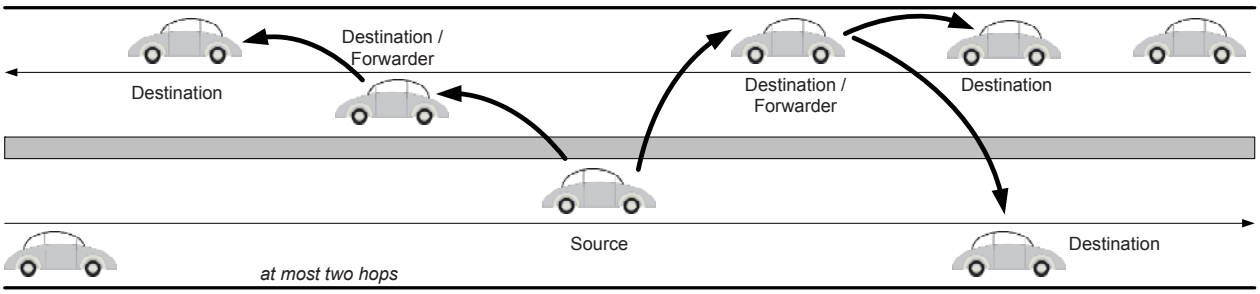

Figure 4 — N-hop broadcast (example with N=2)

6.4 Groupcasting

Groupcast communications includes broadcast communications and multicast communications. The definition and maintenance of multicast groups and the related MAC multicast addresses is outside the scope of this International Standard. Groupcasting is applicable to all kinds of networking protocols and to CIs of the CI classes CIC-wl1, CIC-wl3 and CIC-wl5 specified in ISO 21218.

Three basically different types of groupcasting are given:

a) event-driven groupcasting;

b) repetitive event-driven groupcasting;

c) registered periodic groupcasting.

Groupcast transmissions may be requested by, for example,

— a service for dissemination of

  — LDM data and other groupcast pool data,

© ISO 2011 – All rights reserved
Documents
Document Sharing Hub
Full document details: BS ISO 29281:2011

  - ITS service announcement information,
  - “forwarding data”,
- any networking protocol for dissemination of
  - “forwarding data”,
  - “ITS Station Information” (ITSSI),
  - other network-protocol-specific groupcast data,
- an ITS-S management entity for dissemination of
  - CI management data,
  - ITS station management data,
  - ITSSI,
- the MAC-sublayer of a CI for dissemination of
  - medium-specific MAC management data.

ITS-S management groupcasting shall be as specified in ISO 24102, if applicable.

MAC-sublayer groupcasting is medium-specific and shall be specified in the media standards, if applicable.

A communication medium, e.g. CALM M5, may accept control from the ITS station management entity with respect to transmission and reception of management frames commanded via the MI-SAP. Such functionality is expected to be specified in the related medium standard rather than in this International Standard.

All periodic groupcast communications except for those carried on MAC management frames, independent of the basic networking protocol used, may be processed by the ITS-MUX virtual network service, as specified in this International Standard.

NOTE 1 The main design goal of groupcasting via ITS-MUX is to minimize the load in the wireless communication channels by mapping as many groupcast transmission requests as possible onto a single frame.

NOTE 2 In simple implementations with only one networking protocol, ITS-MUX forwards data packets between the networking protocol and the IN-SAP.

The overall groupcasting architecture is presented in Figure 5. The building blocks are:

d) “Groupcasting Registration Handler” located in the “ITS Facilities Layer”;

e) “Groupcasting Manager” located in the “ITS station management entity” and specified in ISO 24102;

f) “Groupcasting Schedulers” located in the networking & transport layer;

g) CIs supporting MAC groupcast frames.

© ISO 2011 – All rights reserved

Documents
Document Sharing Hub
Full document details: BS ISO 29281:2011

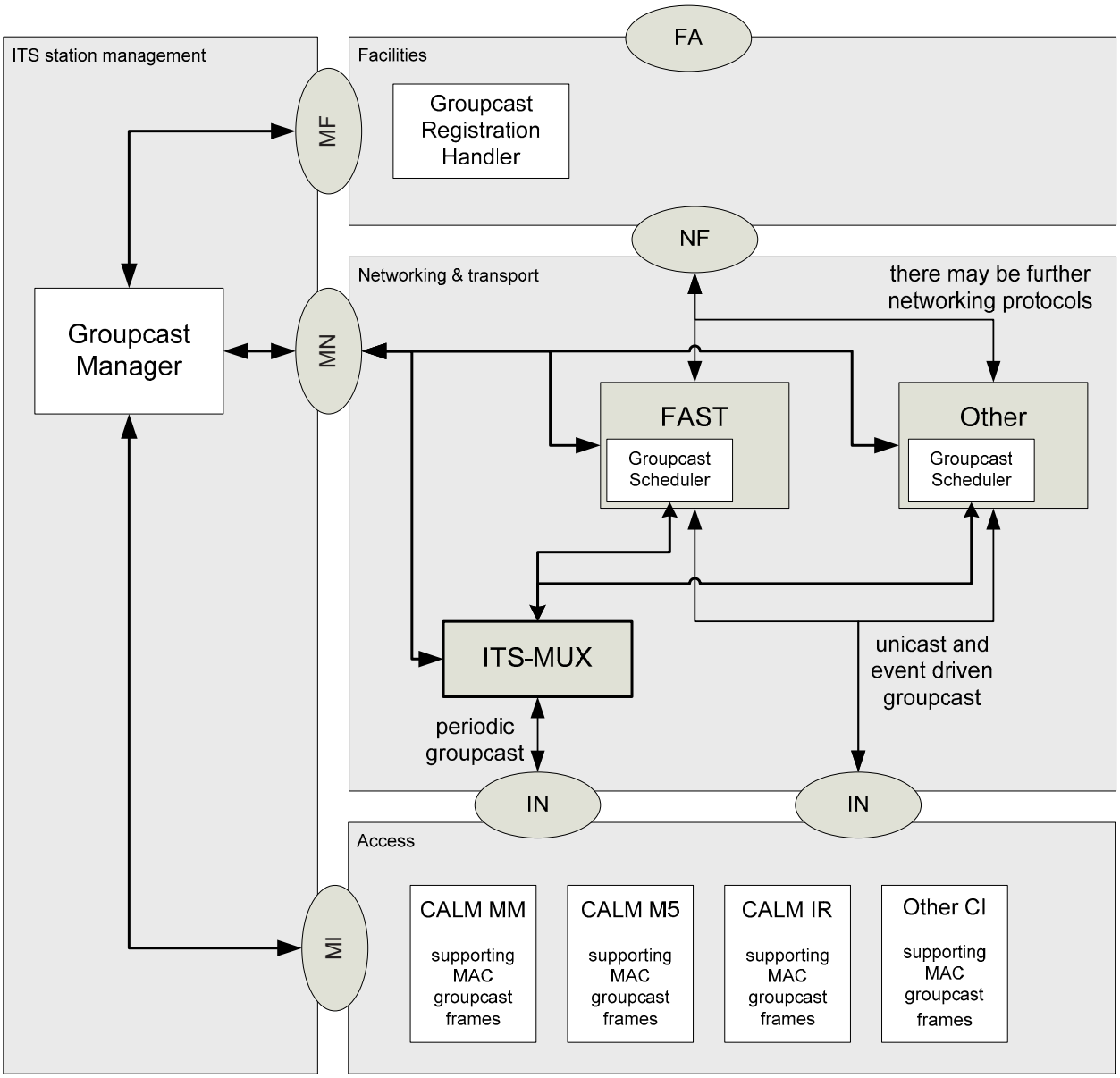

Figure 5 — Global groupcasting architecture with Geo-Routing as an example

NOTE 3 Required mechanisms for security related to groupcasting are outside the scope of this International Standard.

6.5 Networking & transport layer protocols

This International Standard specifies the following ITS networking & transport layer protocols:

— FAST networking & transport layer protocol:

  — single-hop between ITS stations;

  — N-hop broadcast;

  — ITS station-internal forwarding;

— ITS-MUX virtual networking & transport layer service.

© ISO 2011 – All rights reserved
Documents
Document Sharing Hub
Full document details: BS ISO 29281:2011

6.6 Management of ITS-S communication layers

Details of the ITS-S management entity are specified in ISO 24102.

6.7 FAST implementation architectures

The FAST networking & transport layer protocol is primarily designed for single-hop communications, i.e. without automatic forwarding of packets at nodes between the source node and the destination node. However, FAST also supports local forwarding which is needed in installations, where ITS-S host functionality and ITS-S router functionality are implemented in distinct physical units. The implementation architectures presented in Figures 6, 7 and 8 are supported.

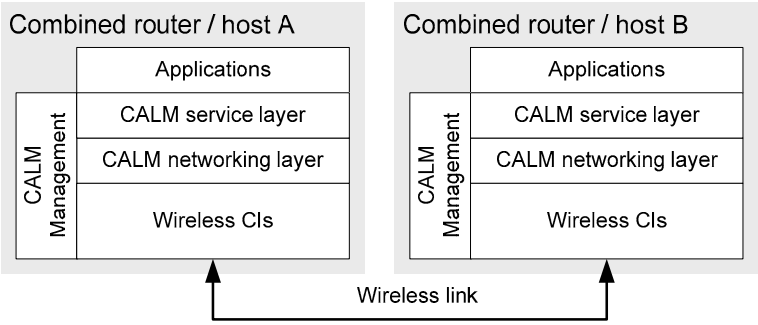

Figure 6 — FAST implementation architecture A

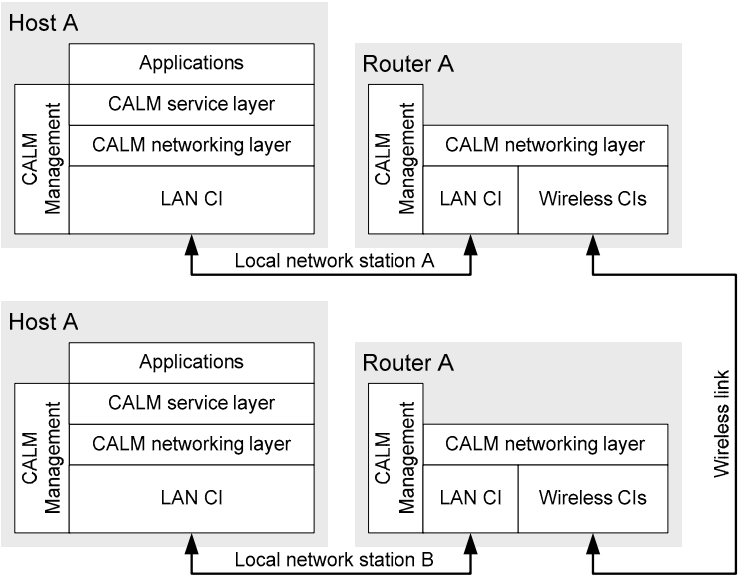

Figure 7 — FAST implementation architecture B

© ISO 2011 – All rights reserved

Documents
Document Sharing Hub
Full document details: BS ISO 29281:2011

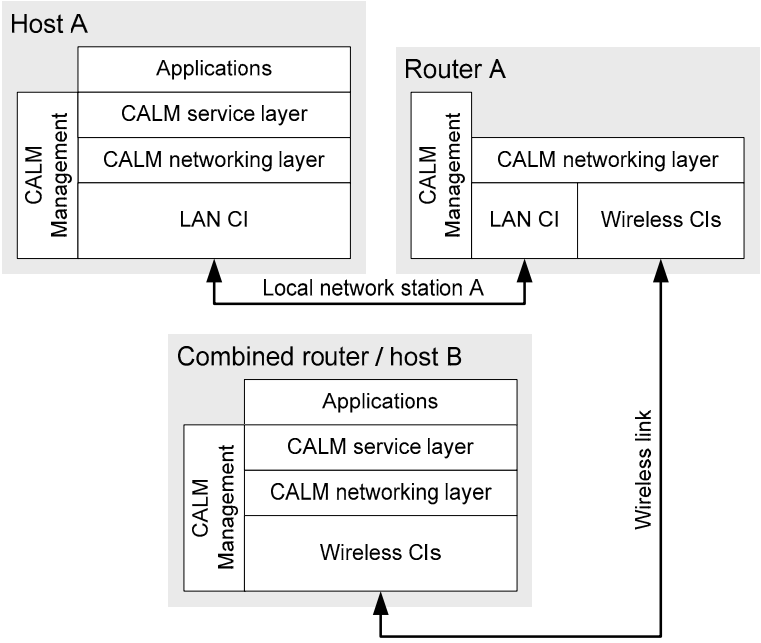

Figure 8 — FAST implementation architecture C

Informative Annex C provides networking protocol examples for the three implementation architectures.

7 Networking & transport layer protocols

7.1 Basics

The networking & transport layer protocols shall be identified in the IN-SAP with the appropriate SAP address as specified in ISO 21218. The networking & transport layer protocols shall use the service DL-UNITDATA as specified in ISO 21218.

A networking protocol may imply a dedicated transport layer protocol. The network/transport layer protocols shall provide an NF-SAP to the facilities layer specified in ISO 21217.

Networking & transport layer protocols shall be managed via the MN-SAP specified in ISO 24102.

Networking & transport layer protocols may be secured via the SM interface specified in ISO 21217. Details are outside the scope of this International Standard.

7.2 FAST networking & transport layer protocols

7.2.1 Elements and basic procedures

The FAST networking & transport layer protocol is a slim protocol designed primarily for single-hop communications that uses a two-octet FAST basic header (networking header) as shown in Figure 9. A FAST networking & transport layer protocol extension is included to support additional functionality:

— “Local Port Protocol” (LPP);

— multiple hops (N-hop broadcast) in the wireless link.

© ISO 2011 – All rights reserved
Documents
Document Sharing Hub
Full document details: BS ISO 29281:2011

FAST basic header	
sourceAddress NWref	destinationAddress NWref

Figure 9 — FAST basic header

The sourceAddress and destinationAddress fields shall contain the NWref of source and destination, respectively, i.e. indicating end points as specified in Table 2. Values used in the wireless link shall be assigned by the router ITS-SCU under the responsibility of the NWref handler (see Figure 10).

NWref values used in the sourceAddress and destinationAddress fields of the FAST basic header shall be mapped to NWref values as assigned to the service in the host ITS-SCU under the responsibility of the NWref handler. A unique NWref numbering scheme in an ITS station is achieved by ServiceNWref. ServiceNWref shall be the concatenation of NWref as assigned to the service in the host ITS-SCU and the ITS-SCU-ID of the host ITS-SCU (see Figure 10).

NOTE 1 If a service resides in the router ITS-SCU, the NWref values used in the FAST network/transport header and in the ServiceNWref might be the same.

ServiceNWref	
Host NWref	Host CCK-ID

Figure 10 — ServiceNWref

Every router ITS-SCU shall maintain a look-up table (see Figure 11) for ServiceNWref and NWref as assigned by the local router ITS-SCU for usage in the FAST basic header.

Local router	ServiceNWref (local host)	
Link NWref	Host NWref	Host CCK-ID

Figure 11 — NWref look-up table

In receive mode, the destinationAddress NWref contained in the FAST basic header shall be used to search in the column “Link NWref”. The related entry in the column “ServiceNWref” can then be used to check the forwarding table.

In transmit mode, the “ServiceNWref” information shall be used to identify the proper value for NWref to be used in the sourceAddress field of the FAST basic header.

NOTE 2 This look-up table can be favorably integrated in the forwarding tables (see Figure 12).

The NWref handler shall be responsible for the unique assignment of NWref values as specified in Table 2.

© ISO 2011 – All rights reserved

Documents
Document Sharing Hub
Full document details: BS ISO 29281:2011

Table 2 — NWref values

NWref	Description
0	Groupcast manager
1-251	General services including “15628 Port Manager” and “15628 Kernel Emulator”
252	FAST networking & transport layer protocol extension used. This value is prohibited in the sourceAddress field of the FAST basic header. It shall be used in the destinationAddress field of the FAST basic header in order to indicate usage of the FAST networking & transport layer protocol extension. If the FAST networking & transport layer protocol extension is used, the destination address NWref shall be contained in the first element of the FAST extension header as specified in Figure 25.
253	FAST networking & transport layer protocol-router ITS-SCU; only for local forwarding between a host ITS-SCU and a router ITS-SCU in an ITS station.
254	FAST networking & transport layer protocol-host ITS-SCU; only for local forwarding between a host ITS-SCU and a router ITS-SCU in an ITS station.
255	Unknown/don't care (logical NULL)

The network protocol shall maintain information as shown in the forwarding table according to Figure 12.

Remote service			Local service			Timeout
Link NWref	CI-ID	CI Status	Link NWref	ServiceNWref	User Priority	

Figure 12 — FAST networking & transport layer protocol forwarding table — Format

The elements below “Remote service” allow access to the ITS-S application in the peer (remote) ITS station.

— The elements “Link NWref” shall carry the NWref values as used in the FAST basic header in the link. It is unique only in combination with the element “CI-ID”.

— The element “CI-ID” shall carry the CI-ID of the UC-VCI which connects to the peer station.

— The element “CI Status” shall contain the CI status as specified in ISO 21218.

The elements below “Local service” allow access to the ITS-S application in the local ITS station.

— The element “Link NWref” shall carry the NWref values as used in the FAST basic header in the link. It is unique only at the local router ITS-SCU.

— The element “ServiceNWref” shall be as specified in Figure 10.

— The element “User Priority” shall contain the user priority as specified in ISO 21218. The value of “User Priority” for an unknown priority shall be zero.

The element “Timeout” contains time information on the validity of this entry.

© ISO 2011 – All rights reserved
Documents
Document Sharing Hub
Full document details: BS ISO 29281:2011

7.2.2 Initial settings of forwarding tables in host ITS-SCUs

7.2.2.1 Activation of a LAN VCI

Upon activation of a VCI to interconnect local ITS-SCUs, entries in the forwarding tables of the FAST networking & transport layer protocol, as presented in Figure 13, shall be created in host ITS-SCU upon request of the ITS station management entity via MN-SAP in order to enable FAST local forwarding.

NOTE These entries are not needed for implementations without local area network, i.e. where host and router functionality is combined in a single ITS-SCU.

Remote service			Local service			Timeout
Link NWref	CI-ID	CI Status	Link NWref	ServiceNWref	User Priority	
253	UC-VCI, no peer relation	"active" (see ISO 21218)	254	(255, 2)	255	none
	BC-VCI					

Figure 13 — FAST networking & transport layer protocol forwarding table— Creation of LAN VCI in a host ITS-SCU

7.2.2.2 Creation and deregistration of a socket

Upon creation of a socket, the FAST networking & transport layer protocol in the host ITS-SCU shall create an entry in the forwarding table as presented in Figure 14.

Remote service			Local service			Timeout
Link NWref	CI-ID	CI Status	Link NWref	ServiceNWref	User Priority	
255	"don't know"		255 or 254	(of service, 0)	of service	none

Figure 14 — FAST networking & transport layer protocol forwarding table — Creation of a socket in a host ITS-SCU

The Link NWref of the local service shall show the value 255. If the FAST networking & transport layer protocol knows that local forwarding of packets to the router ITS-SCU is needed, the value 254 may also be used alternately.

Upon deregistration of the socket, the entry shall be deleted.

7.2.2.3 FAST ITS service registration

Upon registration of a FAST ITS service at the groupcast manager in an ITS service provider host ITS-SCU, the groupcast manager shall request the setting of an entry in the forwarding table for every requested CI as presented in Figure 15, which is actually an update of the entry presented in Figure 14.

© ISO 2011 – All rights reserved

Documents
Document Sharing Hub
Full document details: BS ISO 29281:2011

Remote service			Local service			Timeout
Link NWref	**CI-ID**	**CI Status**	**Link NWref**	**ServiceNWref**	**User Priority**	
255	CI requested for this service NOTE The CI might be in another local ITS-SCU.		255 or 254	(of service, 0)	of service	none

Figure 15 — FAST networking & transport layer protocol forwarding table — Registration of FAST ITS service provider in a host ITS-SCU

The Link NWref of the local service shall show the value assigned to the service by the router ITS-SCU, if ITS-S router and ITS-S host functionality are contained in the same ITS-SCU, or the value 254 to indicate host ITS-SCU and the need for local forwarding, or the value 255 “unknown”.

Upon deregistration of the service, the entry shall be deleted.

7.2.3 Initial settings of forwarding tables in router ITS-SCUs

7.2.3.1 Activation of wireless VCI

Upon activation of a wireless VCI (see the CI state “active” in ISO 21218), which supports the FAST networking & transport layer protocol (see parameter 23 “NWsupport” in ISO 21218), entries in the forwarding table of the FAST networking & transport layer protocol in the router ITS-SCU, as presented in Figure 16, shall be created, if applicable. Details of the creation of such entries shall be as specified in ISO 24102.

Remote service			Local service			Timeout
Link NWref	**CI-ID**	**CI Status**	**Link NWref**	**ServiceNWref**	**User Priority**	
255	UC-VCI, no peer relation	“active” (see ISO 21218)	255	(255, 0)	“unknown” 0	none
	BC-VCI					
	MC-VCI					

Figure 16 — FAST networking & transport layer protocol forwarding table — Creation of wireless VCIs

7.2.3.2 Reception of frame from peer station

Upon reception of a frame from a new peer station, identified by a new MAC address in the CI, the CI-ID field of the related entry without peer relation in the forwarding table shall be assigned the relation to this new peer station. Then a new entry for a UC-VCI with unknown peer relation shall be created in the forwarding table.

Whether creation of a new entry for a UC-VCI with unknown peer relation shall require a previous creation of a new UC-VCI, or whether such a UC-VCI will be created only upon need, even directly by the CI on its own receiving a DL-UNITDATA.request service primitive, depends on implementation.

© ISO 2011 – All rights reserved
Documents
Document Sharing Hub
Full document details: BS ISO 29281:2011

7.2.3.3 Groupcast manager

In support of the groupcast manager, entries in the forwarding table of the FAST networking & transport layer protocol in the router ITS-SCU, as presented in Figure 17, shall be created. Details of the creation of such entries shall be as specified in ISO 24102.

Remote service			Local service			Timeout
Link NWref	CI-ID	CI Status	Link NWref	ServiceNWref	User Priority	
0	UC-VCI, no peer relation	"active" (see ISO 21218)	0	(0, 0)	255	none

Figure 17 — FAST networking & transport layer protocol forwarding table — Groupcast manager

7.2.3.4 Activation of a LAN VCI

Upon activation of a VCI to interconnect local ITS-SCUs, entries in the forwarding tables of the FAST networking & transport layer protocol, as presented in Figure 18, shall be created in a router ITS-SCU upon request of the ITS station management entity via MN-SAP in order to enable FAST local forwarding.

NOTE These entries are not needed for implementations without local area network, i.e. where host and router functionality is combined in a single unit.

Remote service			Local service			Timeout
Link NWref	CI-ID	CI Status	Link NWref	ServiceNWref	User Priority	
254	UC-VCI, wired, no peer relation	"active" (see ISO 21218)	253	(255, 1)	255	none
	BC-VCI, wired					

Figure 18 — FAST networking & transport layer protocol forwarding table — Creation of LAN VCI in a router ITS-SCU

7.2.3.5 Registration of FAST ITS service

Subsequent to registration of a FAST ITS service at the groupcast manager in the ITS service provider host ITS-SCU, applying inter-ITS-SCU communication by the groupcast manager in the host ITS-SCU as specified in ISO 24102, if applicable, the groupcast managers in the selected router ITS-SCU shall request the creation of an entry in the forwarding table for every selected CI, as presented in Figure 19.

Remote service			Local service			Timeout
Link NWref	CI-ID	CI Status	Link NWref	ServiceNWref	User Priority	
255	CI requested for this service		as assigned by router	(of service, of host)	of service	none

Figure 19 — FAST networking & transport layer protocol forwarding table — Registration of FAST ITS service provider in a router ITS-SCU

AVA Documents
Document Sharing Hub

© ISO 2011 – All rights reserved

Full document details: BS ISO 29281:2011

Upon deregistration of the service, the entry shall be deleted.

7.2.4 Maintenance of forwarding tables for FAST ITS service initialization

7.2.4.1 Introduction

FAST ITS service initialization shall be as specified in ISO 24102.

7.2.4.2 Service provider ITS station

Upon reception of the first frame from a client ITS station in response to a Service Advertisement Frame (SAF), as specified in ISO 24102, an entry in the forwarding table, as presented in Figure 20, shall be created in the forwarding tables of the host ITS-SCU and the selected router ITS-SCU.

Remote service			Local service			Timeout
Link NWref	CI-ID	CI status	Link NWref	ServiceNWref	User Priority	
of service user	UC-VCI, relation to client	"connected" (see ISO 21218)	of service			

Figure 20 — FAST networking & transport layer protocol forwarding table — First frame from client

An entry shall be deleted upon timeout of the service.

7.2.4.3 Service user ITS station

Upon acknowledgement of a received SAF for every service supported, an entry in the forwarding table as presented in Figure 21, shall be created in the forwarding tables of the host ITS-SCU and the selected router ITS-SCU, if not already existent.

Remote service			Local service			Timeout
Link NWref	CI-ID	CI status	Link NWref	ServiceNWref	User Priority	
of service provider	UC-VCI, relation to service provider	"connected" (see ISO 21218)	of client			

Figure 21 — FAST networking & transport layer protocol forwarding table — SAF received

An entry shall be deleted upon timeout of the service.

7.2.5 CIP header

The location of the optional CIP header in the FAST NPDU shall be as specified in Figure 22. The content depends on the selected medium and the setting of the CtrlCI bits CIP0, CIP1 and CIP2.

© ISO 2011 – All rights reserved
Documents
Document Sharing Hub
Full document details: BS ISO 29281:2011

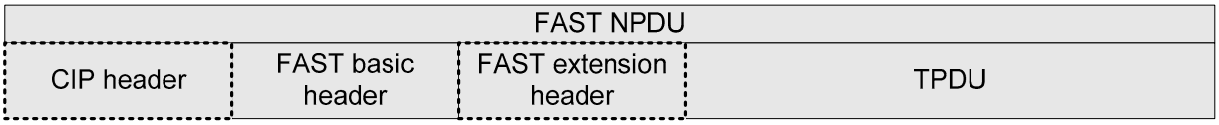

Figure 22 — FAST NPDU

These control bits may be set, for example, by the distributed congestion control algorithm, as specified in ISO 24102, which may overrule other requests.

7.2.6 Transmitting packets

Upon a transmission request, e.g. received via the NF-SAP by means of the service primitive FN-COMM.request, the network protocol shall create the FAST NPDU by concatenating the optional CIP header, the FAST basic header, the optional FAST extension header and the TPDU according to Figure 22.

The FAST networking & transport layer protocol shall check whether the information given in the FAST basic header matches an entry in the forwarding table. A preliminary match is also given, if the NPDU needs to be locally forwarded to the proper router via the wired local network.

The FAST networking & transport layer protocol shall call the CAL service primitive DL-UNITDATA.request with “source_address” and “destination_address” as specified in ISO 21218, according to the forwarding table in Figure 12 and the CtrlCI bits given in the transmission request, with data equal to the NPDU and with priority equal to the user priority given in the forwarding table.

Transmission requests with unknown address information shall be discarded.

7.2.7 Receiving packets

Upon reception of a data packet from a wireless CI by means of the CAL service primitive DL-UNITDATA.indication, or from the ITS-MUX virtual network protocol, the FAST networking & transport layer protocol shall evaluate the network header and, optionally, the first element of the FAST extension header. If the information on sourceAddress NWref, destinationAddress NWref and CI-ID matches an entry in the forwarding table, except where fields are not set, the entry shall be duplicated and complemented. If no entry matches, the received packet shall be discarded.

If the received packet was not discarded as a result of the FAST basic header checking, the packet shall be processed further.

— If the FAST networking & transport layer protocol extension is used, the packet shall be forwarded to the FAST networking & transport layer protocol extension.

— If the ITS-SCU-ID field indicates the local ITS-SCU, the packet shall optionally be processed by the FAST networking & transport layer protocol extension, if applicable, Then the service primitive FN-COMM.indication with CI-ID equal to the CI-ID of the CI that issued the DL-UNITDATA.indication service primitive, data equal to the TPDU, priority equal to the priority provided in the DL-UNITDATA.indication service and other parameters, as applicable, shall be called to pass the received packet via the facilities layer to the service.

— If the ITS-SCU-ID field indicates a remote ITS-SCU in the same station, local forwarding shall apply. Further processing of the packet shall apply in the final destination.

A CALM medium may provide the user priority used at the transmitting station. Usage of user priority is not defined.

© ISO 2011 – All rights reserved

Documents
Document Sharing Hub
Full document details: BS ISO 29281:2011