BRITISH STANDARD

BS ISO 29301:2010

Microbeam analysis — Analytical transmission electron microscopy — Methods for calibrating image magnification by using reference materials having periodic structures

ICS 37.020; 71.040.50

NO COPYING WITHOUT BSI PERMISSION EXCEPT AS PERMITTED BY COPYRIGHT LAW

Document Sharing Hub
British Standards

Full document details: BS ISO 29301:2010

National foreword

This British Standard is the UK implementation of ISO 29301:2010.

The UK participation in its preparation was entrusted to Technical Committee CII/9, Microbeam analysis.

A list of organizations represented on this committee can be obtained on request to its secretary.

This publication does not purport to include all the necessary provisions of a contract. Users are responsible for its correct application.

Compliance with a British Standard cannot confer immunity from legal obligations.

This British Standard was published under the authority of the Standards Policy and Strategy Committee on 30 June 2010

© BSI 2010

ISBN 978 0 580 62431 5

Amendments/corrigenda issued since publication

Date	Comments

Documents
Document Sharing Hub

Full document details: BS ISO 29301:2010

INTERNATIONAL STANDARD

ISO 29301

First edition
2010-06-01

Microbeam analysis — Analytical transmission electron microscopy — Methods for calibrating image magnification by using reference materials having periodic structures

Analyse par microfaisceaux — Microscopie électronique en transmission analytique — Méthodes d'étalonnage du grandissement d'image au moyen de matériaux de référence de structures périodiques

Reference number
ISO 29301:2010(E)

Documents
Document Sharing Hub

© ISO 2010

Full document details: BS ISO 29301:2010

PDF disclaimer

This PDF file may contain embedded typefaces. In accordance with Adobe's licensing policy, this file may be printed or viewed but shall not be edited unless the typefaces which are embedded are licensed to and installed on the computer performing the editing. In downloading this file, parties accept therein the responsibility of not infringing Adobe's licensing policy. The ISO Central Secretariat accepts no liability in this area.

Adobe is a trademark of Adobe Systems Incorporated.

Details of the software products used to create this PDF file can be found in the General Info relative to the file; the PDF-creation parameters were optimized for printing. Every care has been taken to ensure that the file is suitable for use by ISO member bodies. In the unlikely event that a problem relating to it is found, please inform the Central Secretariat at the address given below.

COPYRIGHT PROTECTED DOCUMENT

© ISO 2010

All rights reserved. Unless otherwise specified, no part of this publication may be reproduced or utilized in any form or by any means, electronic or mechanical, including photocopying and microfilm, without permission in writing from either ISO at the address below or ISO's member body in the country of the requester.

ISO copyright office
Case postale 56 • CH-1211 Geneva 20
Tel. + 41 22 749 01 11
Fax + 41 22 749 09 47
E-mail copyright@iso.org
Web www.iso.org

Published in Switzerland

© ISO 2010 – All rights reserved

Documents
Document Sharing Hub

Full document details: BS ISO 29301:2010

Contents

Page

Foreword iv

Introduction v

1 Scope 1

2 Normative references 1

3 Terms, definitions and abbreviated terms 1

4 Image magnification 5
4.1 Definition of the image magnification 5
4.2 Expressing magnification 6

5 Reference materials 7
5.1 General 7
5.2 Requirements for CRM/RM 7
5.3 Storage and handling 7

6 Calibration procedures 7
6.1 General 7
6.2 Mounting CRM/RM 8
6.3 Setting TEM operating conditions for calibration 8
6.4 Capturing digitized image 10
6.5 Digitizing the image recorded on photographic film 11
6.6 Measurement of the angle-corrected distance D_t, from the digitized image 12
6.7 Digitization of reference scale for pixel size calibration 15
6.8 Calibration of image magnification 16
6.9 Calibration of scale bar 18
6.10 Calibration procedure for length measurements using photographic film only 19

7 Accuracy of image magnification 19

8 Uncertainty of measurement result 20

9 Calibration report 21
9.1 General 21
9.2 Contents of calibration report 22

Annex A (informative) **Parameters that influence the resultant magnification of a TEM** 23

Annex B (normative) **Flowchart of image-magnification calibration procedure** 24

Annex C (normative) **How to decide the number of lines for averaging** 25

Annex D (informative) **Reference materials for magnification calibration** 28

Annex E (informative) **Example of test report for calibration of TEM magnification** 31

Bibliography 40

© ISO 2010 – All rights reserved

Documents
Document Sharing Hub
Full document details: BS ISO 29301:2010

Foreword

ISO (the International Organization for Standardization) is a worldwide federation of national standards bodies (ISO member bodies). The work of preparing International Standards is normally carried out through ISO technical committees. Each member body interested in a subject for which a technical committee has been established has the right to be represented on that committee. International organizations, governmental and non-governmental, in liaison with ISO, also take part in the work. ISO collaborates closely with the International Electrotechnical Commission (IEC) on all matters of electrotechnical standardization.

International Standards are drafted in accordance with the rules given in the ISO/IEC Directives, Part 2.

The main task of technical committees is to prepare International Standards. Draft International Standards adopted by the technical committees are circulated to the member bodies for voting. Publication as an International Standard requires approval by at least 75 % of the member bodies casting a vote.

Attention is drawn to the possibility that some of the elements of this document may be the subject of patent rights. ISO shall not be held responsible for identifying any or all such patent rights.

ISO 29301 was prepared by Technical Committee ISO/TC 202, *Microbeam analysis*, Subcommittee SC 3, *Analytical electron microscopy*.

© ISO 2010 – All rights reserved
Documents
Document Sharing Hub
Full document details: BS ISO 29301:2010

Introduction

The transmission electron microscope is widely used to investigate the micro/nano-structure of a range of important materials such as semiconductors, metals, nano-particles, polymers, ceramics, glass, food and biological materials. This International Standard is relevant to the need for magnification calibration of the images. It describes the requirements for calibration of the image magnification in the transmission electron microscope using a certified reference material or a reference material having periodic structures.

© ISO 2010 – All rights reserved

Documents
Document Sharing Hub
Full document details: BS ISO 29301:2010

Documents
Document Sharing Hub

Full document details: BS ISO 29301:2010

INTERNATIONAL STANDARD ISO 29301:2010(E)

Microbeam analysis — Analytical transmission electron microscopy — Methods for calibrating image magnification by using reference materials having periodic structures

1 Scope

This International Standard specifies a calibration procedure applicable to images recorded over a wide magnification range in a transmission electron microscope (TEM). The reference materials used for calibration possess a periodic structure, such as a diffraction grating replica, a super-lattice structure of semiconductor or an analysing crystal for X-ray analysis, and a crystal lattice image of carbon, gold or silicon. This International Standard is applicable to the magnification of the TEM image recorded on a photographic film, or an imaging plate, or detected by an image sensor built into a digital camera. This International Standard also refers to the calibration of a scale bar. This International Standard does not apply to the dedicated critical dimension measurement TEM (CD-TEM) and the scanning transmission electron microscope (STEM).

2 Normative references

The following referenced documents are indispensable for the application of this document. For dated references, only the edition cited applies. For undated references, the latest edition of the referenced document (including any amendments) applies.

ISO Guide 30:1992, *Terms and definitions used in connection with reference materials*

ISO Guide 34:2000, *General requirements for the competence of reference material producers*

ISO Guide 35:2006, *Reference materials — General and statistical principles for certification*

ISO/IEC 17025:2005, *General requirements for the competence of testing and calibration laboratories*

ISO/IEC Guide 98-3:2008, *Uncertainty of measurement — Part 3: Guide to the expression of uncertainty in measurement (GUM:1995)*

3 Terms, definitions and abbreviated terms

For the purposes of this document, the terms and definitions in ISO Guide 30 and the following apply.

3.1
alignment
series of operations to align the incident direction of the electron beam to the optical axis using deflectors and/or mechanical knobs

3.2
beam damage
specimen damage generated by irradiation with the electron beam

© ISO 2010 – All rights reserved

Documents
Document Sharing Hub
Full document details: BS ISO 29301:2010

3.3
certified reference material
CRM
reference material, accompanied by a certificate, one or more of whose property values are certified by a procedure which establishes its traceability to an accurate realization of the unit in which the property values are expressed, and for which each certified value is accompanied by an uncertainty at a stated level of confidence

NOTE For the purposes of this International Standard, a CRM possesses periodic structure(s), with the desired range of periodic interval and accuracy, to be used for the calibration of the image magnification.

3.4
contamination
formation of a deposited layer of any material due to the interaction of the electron beam with the sample and/or its immediate environment

3.5
crystal orientation
direction of crystal which is represented by crystal index

NOTE During TEM imaging, it is often useful to have a crystalline specimen aligned such that a specific (low index) zone axis is parallel, or nearly parallel, to the beam direction (optical axis).

3.6
defocus
focusing condition in which the vertical positioning of the specimen is not coincident with the object plane of the objective lens

NOTE Over-focus condition is that the specimen height is nearer the lens than the object plane, under-focus condition is that the specimen height is further from the lens than the object plane.

3.7
diffraction grating replica
shadow-casting carbon replica film constituting a grating which contains 500 to 2 000 parallel grooves per millimetre, or cross-line grating with a similar line spacing

NOTE A diffraction grating replica can be used as a reference material for calibration of the image magnification in the low to medium-low magnification range.

3.8
digital camera
device that detects the image using a chip-arrayed image sensor, such as a charge-coupled device (CCD) or complementary metal-oxide semiconductor (CMOS), that converts a visual image to an electric signal

3.9
dynamic range
range of detectable electron doses illuminated on the detector, in which the image signal can be detected properly

3.10
excitation current
electric current applied to the coil of the magnetic lens

3.11
glass scale
ruler on which a fine scale is drawn and utilized as the reference scale to measure the distance in the digitized image after digitizing it with an image scanner

NOTE The transparency and thermal stability of the glass scale are convenient to get the digitized reference image with a transmitted image scanner and to make the contact image on the imaging plate.

© ISO 2010 – All rights reserved
Documents
Document Sharing Hub
Full document details: BS ISO 29301:2010

3.12
goniometer stage
device to move the specimen laterally and vertically, and to tilt the specimen by tilting the specimen holder around the longitudinal holder axis

3.13
horizontal field width
HFW
original length corresponding to full width in the horizontal direction on a magnified image

3.14
image
two-dimensional projection of the specimen structure generated by TEM

NOTE A photographic film, an imaging plate, and an image sensor built into a digital camera are examples of devices for detecting the image.

3.15
image file format
processing method to encode the image information for storage in a computer file

3.16
image magnification
ratio of the linear dimension of the specific structure/scaling on the image detector, such as a photographic film, an imaging plate, or an image sensor built into a digital camera, to the corresponding linear dimension of the structure/scaling on the specimen

3.17
imaging plate
IP
electron image detector consisting of a film with a thin active layer embedded with specifically designed phosphors

3.18
image scanner
device that converts an analogue image into a digitized image with the desired resolution

NOTE There are mainly two different types of scanners: flatbed type and drum type.

3.19
image sensor
device, such as a charge-coupled device (CCD) array or complementary metal-oxide semiconductor (CMOS) sensor, that converts visual image information to an electric signal, built-in digital camera or other imaging devices

3.20
image wobbler
deflection coil to change direction of incident electron beam onto the specimen

NOTE This coil is activated in a periodic manner with the aim of identifying easily the place of focus.

3.21
just focus
focusing condition in which the specimen height coincides with the object plane of the objective lens

3.22
lattice image
image consisting of interference fringes formed by the interaction between the transmitted electron beam and diffracted electron beam from a specific crystal plane

NOTE Lattice fringes can be used to calibrate image magnification at the high end of the magnification range.

AVA Documents
Document Sharing Hub

© ISO 2010 – All rights reserved

Full document details: BS ISO 29301:2010

3.23
lattice spacing
crystallographic distance between two adjacent parallel planes with the same Miller indices, which can be calculated from the value of the basic cell vector

3.24
magnetic hysteresis
physical phenomenon related to the magnetizing loop in which the magnetic field strength depends on the direction of the adjustment of the exciting current for the magnetic lens

3.25
optical axis
straight line passing through the symmetrical centre of the magnetic field of the electron lens

NOTE The path of an electron beam along this axis goes through the lens without changing the direction.

3.26
photographic film
negative film
sheet or a roll of thin plastic coated by photographic emulsion for recording an image

3.27
pixel-resolution
number of imaging pixels per unit distance of the detector

NOTE Typical unit is sometimes expressed as dots per inch (dpi).

3.28
reference material
RM
material or substance, one or more of whose property values are sufficiently homogeneous and well established to be used for the calibration of an apparatus, the assessment of a measurement method, or for assigning values to materials

NOTE For the purpose of this International Standard, an RM possesses periodic pattern(s) with the desired range of periodic interval and accuracy, to be used for the calibration of the image magnification.

3.29
region of Interest
ROI
a part region extracted from the whole area in the graph

3.30
specimen
small portion of a sample for observation

NOTE For TEM, a specimen has to be thin enough to transmit the electron beam.

3.31
specimen cartridge
part of specimen holder which supports a specimen and is attached to the tip of the specimen holder for use

3.32
specimen drift
unintentional movement of the specimen due to any source (thermal, mechanical, electric, charging)

© ISO 2010 – All rights reserved
Documents
Document Sharing Hub
Full document details: BS ISO 29301:2010

3.33
specimen height
specimen position along the optical axis of the objective lens

NOTE 1 "Specimen height = 0" corresponds to the specimen position in correct focus under the standard excitation condition of the objective lens.

NOTE 2 See Reference [2] in the Bibliography.

3.34
specimen holder
device that supports a specimen in the right position in the pole-piece gap of the objective lens

3.35
standard excitation condition
optimal condition for excitation current of the objective lens to focus the image

NOTE 1 This condition is provided by the TEM manufacturer for each instrument.

NOTE 2 Image magnification is generally measured under this condition; however, as long as reproducible conditions are established, the magnification can be calibrated at any of the instrument settings.

3.36
super-lattice
stable periodic structure which is fabricated by alternating layers of at least two different kinds of materials

NOTE The super-lattice can be used as a reference material for calibration of image magnification from a medium-high to high magnification range.

3.37
transmission electron microscope
TEM
instrument that produces magnified images or diffraction patterns of the specimen by an electron beam which passes through the specimen and interacts with it

3.38
zone axis
crystallographic direction, designated $[u\,v\,w]$, defined by the intersection of a number of crystal planes $(h_1, k_1, l_1 \ldots \ldots h_i, k_i, l_i)$ such that all of the planes satisfy the so-called Weiss zone law; $hu + kv + lw = 0$

4 Image magnification

4.1 Definition of the image magnification

The image magnification (or scaling factor) of the TEM is defined by the ratio of the linear dimension of the specific structure on the detected image to the corresponding linear dimension of the specific structure in the specimen. There are three main kinds of image detectors: photographic film, imaging plate, and image sensor, such as CCD array or CMOS sensor built in the digital camera.

In general, the value of image magnification detected on an image sensor is different from the value of image magnification detected on the photographic film or imaging plate under the same electron optical conditions for TEM imaging, because the image-detecting positions are different from each other (see Figure 1).

© ISO 2010 – All rights reserved

Documents
Document Sharing Hub
Full document details: BS ISO 29301:2010

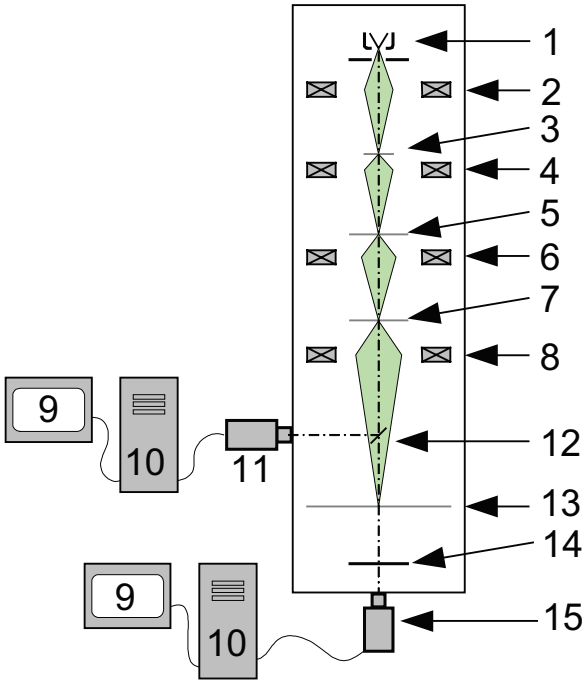

The digital camera (image sensor) position is different from the photographic film/imaging plate position.

Key

1 electron gun
2 condenser lens
3 specimen
4 objective lens
5 1st magnified image
6 intermediate lens
7 2nd magnified image
8 projector lens
9 monitor
10 computer
11 digital camera (image sensor) magnification; $M_s < M_g$
12 screen/mirror
13 viewing screen
14 photographic film/imaging plate magnification; M_f
15 digital camera (image sensor) magnification; $M_{is} > M_f$

Figure 1 — Detector position in TEM system

4.2 Expressing magnification

The magnification of an image recorded on the photographic film or the imaging plate, or detected by the image sensor, is given by a number representing the number of times, and the number is accompanied by the symbol "×" (e.g. 10 000×, 10k×, 1 000 000×, 1M× or ×10 000, ×10k, ×1 000 000, ×1M, where 10 000, 10k, 1 000 000 and 1M are magnitude numbers). Alternatively, introducing a scale bar having a length corresponding to unit length on the specimen can be used to represent the magnification. The digitized image should also indicate a magnification by detailing the number of pixels per unit distance of the raw data file.

NOTE The horizontal field width (HFW) is another way to define the scaling on a magnified image.

© ISO 2010 – All rights reserved
Documents
Document Sharing Hub
Full document details: BS ISO 29301:2010

5 Reference materials

5.1 General

For calibrating the magnification of an image, wherever possible, choose a CRM that is produced in accordance with ISO Guide 34 and certified in accordance with ISO Guide 35.

When a suitable CRM is not available, an RM produced in accordance with ISO Guide 34 may be used.

5.2 Requirements for CRM/RM

Ensure that the chosen CRM/RM

— is stable with respect to vacuum and repeated electron-beam exposure,

— is aligned to a low-index zone axis along the electron optical axis, if the specimen region is a single crystal,

— provides a good contrast and clear interface for the periodic structure in the TEM image,

— can be cleaned to remove contamination without causing mechanical/electrical damage or distortion,

— has a smooth surface on both sides and identical thickness for a super-lattice structure, at least within the area used for the calibration process,

— has an associated valid calibration certificate.

NOTE Single crystal specimens of pure elements used for calibration do not need a calibration reference certificate.

5.3 Storage and handling

The CRM/RM shall be stored in a desiccating cabinet or in a vacuum container.

To ensure minimal handling of the actual CRM/RM, it may be permanently mounted on a specimen holder or a specimen cartridge.

The CRM/RM should be carefully handled without causing damage during the handling.

Check the contamination and deterioration of the CRM/RM, as these may affect calibration. Do not use the CRM/RM if it is damaged or grossly contaminated.

Check the calibration of the CRM/RM at intervals by comparing its calibration values with those of other CRMs/RMs; record the results. The frequency of verification may depend on the nature and usage of the CRM/RM.

The CRM/RM shall be used for calibration purposes only.

6 Calibration procedures

6.1 General

Parameters that influence the magnification of a TEM may cause systematic errors. These are listed in Annex A.

A major factor that influences the reproducibility of the calibration is the magnetic hysteresis of the electro-magnetic lens. It is necessary to minimize its influence by adopting the procedure described below in the

Documents
Document Sharing Hub

© ISO 2010 – All rights reserved

Full document details: BS ISO 29301:2010

same sequence each time, especially related to the direction of magnification setting (higher to lower, or lower to higher). Also, the specimen height and focus setting will influence the reproducibility of the calibration.

To obtain the value of the uncertainty within the laboratory, it is necessary to repeat the calibration procedure periodically.

The selection of the CRM/RM depends on the magnification range being used and the accuracy required. For the purpose of this International Standard, ensure that the uncertainty and repeatability of calibration is better than ±5 % and 98 %, respectively.

The flowchart of the calibration procedure is shown in Annex B.

6.2 Mounting CRM/RM

At the time of mounting the specimen, ensure that handling of the CRM/RM is carried out in accordance with 5.3.

Mount the CRM/RM in accordance with the instructions provided by the TEM and the CRM/RM manufacturers.

Check that the CRM/RM is securely fixed on the specimen holder or specimen cartridge so that it does not move from its mounting. This enables any image degradation caused by vibration to be minimized.

Check that the height of the specimen in the specimen holder is at the position recommended by the TEM manufacture's instructions, in order to keep the eucentric condition.

It is desirable to use a double-tilt or tilt-rotate specimen holder for aligning the crystal orientation of the specimen to the optical axis.

6.3 Setting TEM operating conditions for calibration

Set the operating condition of the TEM according to the following procedures to ensure, as far as possible, use of the same conditions.

a) Check that the degree of vacuum in the TEM column is lower than 10^{-4} Pa and stable.

b) The high voltage shall be applied and an appropriate time be allowed for it to stabilize.

NOTE Oil-filled 100 kV tanks take about 2,5 h; gas-filled tanks take about 45 min. Higher voltage instruments are normally operated with the high voltage continually applied, therefore a stabilization period is not usually required.

c) Use an anti-contamination device, if needed.

d) Select a specimen region of interest (ROI) for the calibration which is clean and free from damage, ensure the eucentric height of the ROI and adjust the height of the ROI, if necessary.

e) In order to minimize the effect of the magnetic hysteresis of the lenses, set the magnification of the TEM to the target value for calibration according to the same sequence, for example, adjust higher magnification than the target magnification at first, then set the target magnification after that.

f) Set the excitation of the objective lens to the desired reproducible value; the standard condition is recommended.

g) Adjust the specimen height to focus the magnified image projected on the fluorescent screen, the TV monitor or the personal computer (PC) screen.

NOTE If the TEM in question is not equipped with a specimen-height control function, this procedure can be omitted.

© ISO 2010 – All rights reserved
Documents
Document Sharing Hub
Full document details: BS ISO 29301:2010