BS ISO 29584:2015

BSI Standards Publication

Glass in building — Pendulum impact testing and classification of safety glass

bsi.

...making excellence a habit.™

Document Sharing Hub

National foreword

This British Standard is the UK implementation of ISO 29584:2015.

The UK participation in its preparation was entrusted to Technical Committee B/520/4, Properties and glazing methods.

A list of organizations represented on this committee can be obtained on request to its secretary.

This publication does not purport to include all the necessary provisions of a contract. Users are responsible for its correct application.

© The British Standards Institution 2016.
Published by BSI Standards Limited 2016

ISBN 978 0 580 85092 9

ICS 81.040.20

Compliance with a British Standard cannot confer immunity from legal obligations.

This British Standard was published under the authority of the Standards Policy and Strategy Committee on 31 January 2016.

Amendments/corrigenda issued since publication

Date	Text affected

Documents
Document Sharing Hub

Full document details: BS ISO 29584:2015

INTERNATIONAL STANDARD

ISO 29584

First edition
2015-12-01

Glass in building — Pendulum impact testing and classification of safety glass

Verre dans la construction — Essai d'impact au pendule et classification du verre de sécurité

Reference number
ISO 29584:2015(E)

Documents
Document Sharing Hub

© ISO 2015

Full document details: BS ISO 29584:2015

COPYRIGHT PROTECTED DOCUMENT

© ISO 2015, Published in Switzerland

All rights reserved. Unless otherwise specified, no part of this publication may be reproduced or utilized otherwise in any form or by any means, electronic or mechanical, including photocopying, or posting on the internet or an intranet, without prior written permission. Permission can be requested from either ISO at the address below or ISO's member body in the country of the requester.

ISO copyright office
Ch. de Blandonnet 8 • CP 401
CH-1214 Vernier, Geneva, Switzerland
Tel. +41 22 749 01 11
Fax +41 22 749 09 47
copyright@iso.org
www.iso.org

© ISO 2015 – All rights reserved

Documents
Document Sharing Hub

Full document details: BS ISO 29584:2015

Contents

Page

Foreword ..... **iv**
Introduction ..... **v**
1 Scope **1**
2 Normative references **1**
3 Terms and definitions **2**
4 Test requirements **2**
5 Test method **3**
5.1 Test apparatus 3
5.2 Calibration of test apparatus 12
5.3 Test pieces 12
5.3.1 General 12
5.3.2 Dimensions of the test pieces 12
5.3.3 Number of test pieces 12
5.3.4 Preparation of the test pieces 12
5.4 Impact test procedure 12
6 Classification **13**
6.1 General 13
6.2 Drop height class 14
6.3 Mode of breakage 14
6.4 Performance classification 14
7 Test report **15**
Annex A (normative) **Method of fabrication of the shot bag impactor** **17**
Annex B (normative) **Calibration of the test rig** **23**
Annex C (normative) **Sphere penetration test** **29**
Annex D (informative) **Example of a test rig** **30**
Annex E (informative) **Terms and definitions of glass types** **33**
Annex F (informative) **Example of release mechanism** **35**
Bibliography **40**

© ISO 2015 – All rights reserved

Documents
Document Sharing Hub
Full document details: BS ISO 29584:2015

Foreword

ISO (the International Organization for Standardization) is a worldwide federation of national standards bodies (ISO member bodies). The work of preparing International Standards is normally carried out through ISO technical committees. Each member body interested in a subject for which a technical committee has been established has the right to be represented on that committee. International organizations, governmental and non-governmental, in liaison with ISO, also take part in the work. ISO collaborates closely with the International Electrotechnical Commission (IEC) on all matters of electrotechnical standardization.

The procedures used to develop this document and those intended for its further maintenance are described in the ISO/IEC Directives, Part 1. In particular the different approval criteria needed for the different types of ISO documents should be noted. This document was drafted in accordance with the editorial rules of the ISO/IEC Directives, Part 2 (see www.iso.org/directives).

Attention is drawn to the possibility that some of the elements of this document may be the subject of patent rights. ISO shall not be held responsible for identifying any or all such patent rights. Details of any patent rights identified during the development of the document will be in the Introduction and/or on the ISO list of patent declarations received (see www.iso.org/patents).

Any trade name used in this document is information given for the convenience of users and does not constitute an endorsement.

For an explanation on the meaning of ISO specific terms and expressions related to conformity assessment, as well as information about ISO's adherence to the WTO principles in the Technical Barriers to Trade (TBT) see the following URL: Foreword - Supplementary information

The committee responsible for this document is ISO/TC 160, *Glass in building*, Subcommittee SC 2, *Use considerations*.

This first edition cancels and replaces ISO/TS 29584:2012, which has been technically revised.

© ISO 2015 – All rights reserved
Documents
Document Sharing Hub
Full document details: BS ISO 29584:2015

Introduction

Accidental human impact with glass panes can be a source of injury. The classification of glass in terms of its ability to withstand impact and the consequences of the glass breaking under such impact has been considered in many countries. The use of a soft body impactor to represent a human body has enabled regulators, code officials and other control organizations to specify glazing that reduces the risk of cutting and piercing injuries.

This International Standard has been prepared as a means of detailing the differences and similarities in pendulum impact tests for the classification of safety glass.

The traditional impactor has been a lead shot-filled leather bag. This has been found to suffer from ageing or shape change and variability in the energy transfer into the test piece if not properly maintained. It has been found that there can be wide variation in the supporting frame or sub-frame.

During their work, CEN /TC 129/WG 13 examined some of the problems associated with the lead shot-filled leather bag impactor and the supporting frame. CEN/TC 129/WG 13 prepared EN 12600 that uses an impactor consisting of steel masses and two tyres.

The primary objectives in developing the new impactor for the evaluation of safety glass can be summarized as follows:

a) elimination of the differences between

   1) taped and un-taped lead shot bags and

   2) lead shot bags and bags filled with sand or glass beads;

b) ageing of lead shot bag;

c) elimination of the use of lead shot;

d) harmonization of national impact test methods.

© ISO 2015 – All rights reserved

Documents
Document Sharing Hub
Full document details: BS ISO 29584:2015

Documents
Document Sharing Hub

INTERNATIONAL STANDARD ISO 29584:2015(E)

Glass in building — Pendulum impact testing and classification of safety glass

1 Scope

The purpose of this International Standard is to evaluate, by means of soft body impactors, safe breakage characteristics of glazing products intended to reduce cutting and piercing injuries to persons through accidental impact.

This International Standard examines test methods currently employed to determine the pendulum impact performance of safety glass. Use of the methodologies in this International Standard improves the reproducibility of test results and gives a common basis of classification. The aim is for the performance of glass products manufactured and tested in various countries to be better understood and more consistent.

Two types of soft body impactors are defined. The traditional shot bag impactor is detailed both in terms of manufacture and maintenance in an attempt to overcome problems associated with such impactors becoming misshapen. The twin tyre impactor is also detailed.

The test equipment, excluding the impactor, is also described. A method of calibrating the test frame is given. The benefit of calibrating the test equipment is the increased reproducibility of the test results.

Classification of glass products is also detailed. The classification system allows information on the following to be given:

a) the maximum drop height at which the glass either did not break or broke safely, i.e. in a manner similar to laminated glass or toughened glass;

b) the manner in which the glass would break, i.e. as toughened glass, laminated glass, annealed glass, irrespective of whether or not the glass was broken during the test;

c) the maximum drop height at which the glass either did not break or broke safely, i.e. in a manner similar to laminated glass.

This International Standard does not specify the intended use of the products, but provides a method of classification in terms of the performance of the materials being tested. The impact energy used for the various levels of classification are designed to provide the intended user or the legislator with the information to assist in defining the level of safety and protection required relative to the intended location at which the selected safety glass is to be used.

2 Normative references

The following documents, in whole or in part, are normatively referenced in this document and are indispensable for its application. For dated references, only the edition cited applies. For undated references, the latest edition of the referenced document (including any amendments) applies.

ISO 48, *Rubber, vulcanized or thermoplastic — Determination of hardness (hardness between 10 IRHD and 100 IRHD)*

ISO 2408, *Steel wire ropes for general purposes — Minimum requirements*

ISO 4251-1, *Tyres (ply rating marked series) and rims for agricultural tractors and machines — Part 1: Tyre designation and dimensions, and approved rim contours*

© ISO 2015 – All rights reserved

Documents
Document Sharing Hub
Full document details: BS ISO 29584:2015

3 Terms and definitions

For the purposes of this document, the following terms and definitions apply.

3.1
safety glass
glazing material so treated, constructed or combined with other materials that, if fractured or broken by accidental human contact, gives fragments which are less likely to pierce or to cause severe cuts than fragments of ordinary annealed glass, or the likelihood of cutting and piercing injuries that might result from such contact is minimized by glass shard containment

EXAMPLE Laminated glasses and thermally toughened glasses are types of safety glazing material.

3.2
soft body impactor
impactor that is representative of a human body

EXAMPLE A soft body impactor can be either a shot bag (see 5.1.3.1) or a twin tyre (see 5.1.3.2) type.

3.3
asymmetric material
glass that has different surface characteristics on opposite faces, e.g. patterning, coating, or manufactured from laminations of glass or plastics glazing sheet material together with interlayer materials that are arranged in different sequential order and of varying thicknesses

3.4
drop height
vertical height from the horizontal centre line of the impactor at the point of release to the horizontal centre line of the impactor when at rest vertically

3.5
crack-free particle
piece of glass that does not contain any cracks that run from one edge to another

Note 1 to entry: See Figure 1.

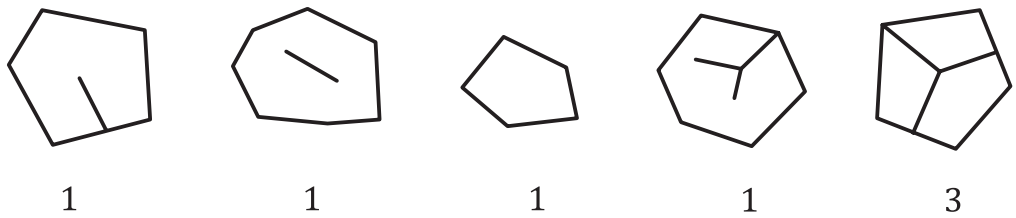

Key
1, 3 numbers of crack free particles in each piece of glass

Figure 1 — Example of crack free particles

3.6
masking
temporary protective covering applied to the test piece for ease of transportation

4 Test requirements

4.1 When tested by the method given in Clause 5, each test piece shall either not break or shall break as defined in one of 4.2 and 4.3.

© ISO 2015 – All rights reserved
Documents
Document Sharing Hub
Full document details: BS ISO 29584:2015

4.2 Numerous cracks appear, but no shear or opening is allowed within the test piece through which a (76 ± 1) mm diameter sphere can pass when a maximum force of 25 N is applied (in accordance with Annex C).

Additionally, if particles are detached from the test piece up to 3 min after impact, they shall, in total, weigh no more than the mass equivalent to 10 000 mm^2 of the original test piece. The largest single particle shall weigh no more than the mass equivalent of 4 400 mm^2 of the original test piece. Within 5 min of impact and disintegration occurs the 10 largest crack-free particles collected shall weigh no more than the mass equivalent to 6 500 mm^2 of the original test piece. The particles shall be selected only from the portion of the original test piece exposed in the test frame. Only the exposed area of any particle retained in the test frame shall be taken into account in determining the mass equivalent.

4.3 The 10 largest crack-free particles collected within 3 min after impact shall weigh no more than the mass equivalent of 6 500 mm^2 of the original test piece.

5 Test method

5.1 Test apparatus

5.1.1 Main frame, constructed from welded or bolted, hot-rolled steel channel sections with rounded edges, designed to present a rigid and flat surface to the sub-frame. See Figures 2 and 3. The lower cross members shall be securely fixed to a concrete floor.

NOTE Additional support to the frame can be provided, if required, by means of horizontal steel sections fixed to an adjacent rigid wall (see Figure 2, key 4).

The dimensions of the main frame (see Figure 4) shall be as follows:

a) internal width: (847 ± 5) mm;

b) internal height: (1 910 ± 5) mm.

© ISO 2015 – All rights reserved

Documents
Document Sharing Hub
Full document details: BS ISO 29584:2015

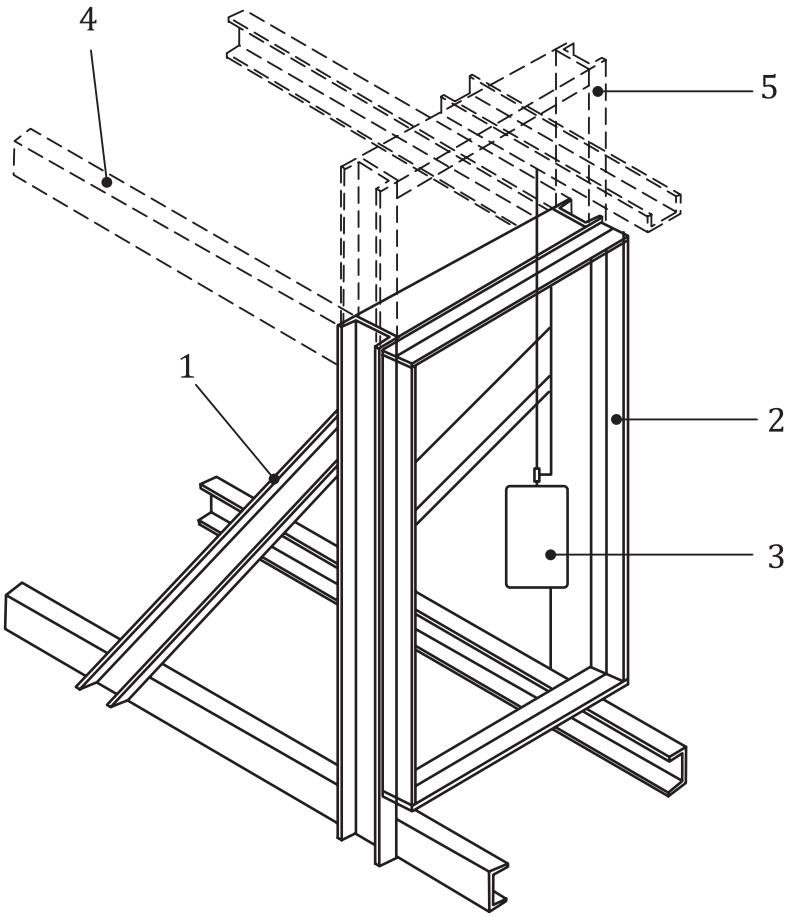

Key

1 main frame
2 clamping frame
3 impactor
4 optional support member
5 optional suspension device

Figure 2 — Test frame

© ISO 2015 – All rights reserved
Documents
Document Sharing Hub
Full document details: BS ISO 29584:2015

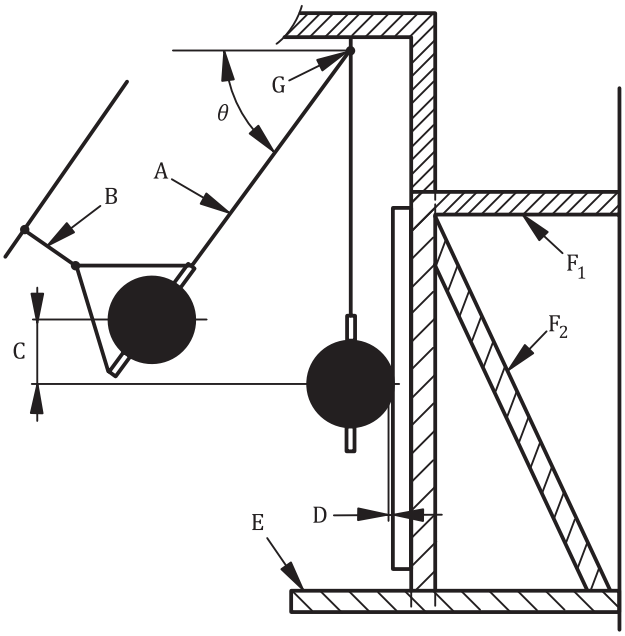

Key

A suspension cable
B traction cable
C drop height
D impactor distance from sample
E support member
F_1 optional support member
F_2 cross members
G bracket (5 mm ≤ d ≤ 15 mm)
θ impactor angle from horizontal

Figure 3 — Side elevation of the main frame with the impactor

© ISO 2015 – All rights reserved

Documents
Document Sharing Hub
Full document details: BS ISO 29584:2015

Dimensions and tolerances in millimetres

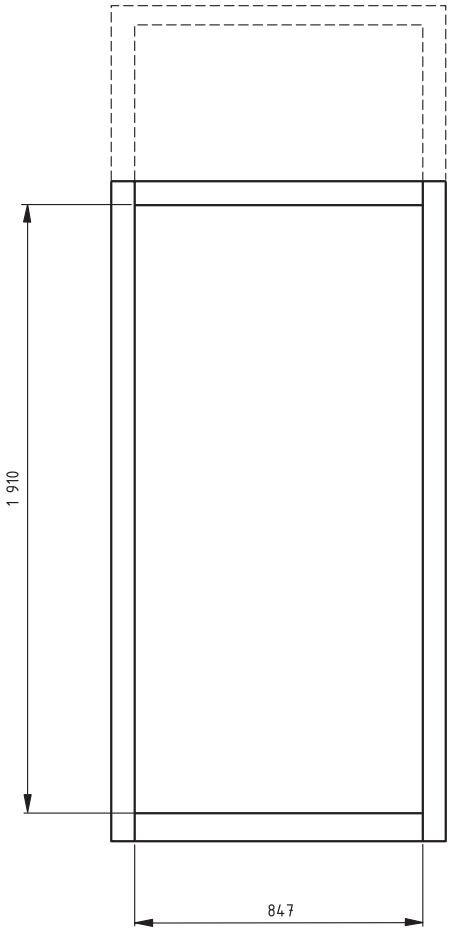

Figure 4 — Dimensions of the front elevation of the frame

5.1.2 Clamping frame, fitted on to the main frame and used to hold the test piece in position for the duration of the test, consisting of two rectangular parts which clamp the test piece along its perimeter. See Figure 5. The inner part of the clamping frame is attached to the main frame.

The assembly is held together by a clamping device. The clamping frame shall be suitably rigid to withstand the pressure exerted by the clamping device.

The dimensions of the clamping frame shall be as follows:

a) internal width: (847 ± 5) mm;

b) internal height: (1 910 ± 5) mm.

Each part of the clamping frame shall be fitted with a strip of rubber. The rubber strips shall be the only element in contact with the test piece and shall be (20 ± 2) mm wide and (10 ± 1) mm thick and have a hardness of (60 ± 5) IRHD in accordance with ISO 48.

NOTE Polychloroprene (polychloroprene) or a similar material is suitable.

© ISO 2015 – All rights reserved
Documents
Document Sharing Hub
Full document details: BS ISO 29584:2015

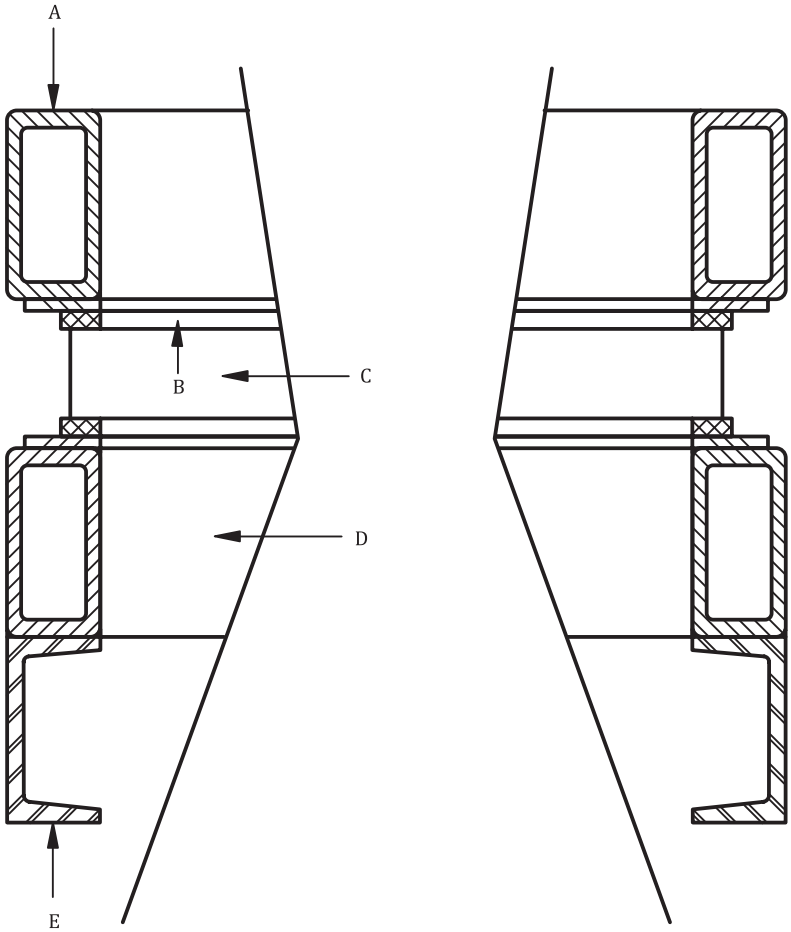

Key

A clamping frame, e.g. ~100 mm × 50 mm × 8 mm

B rubber strips (20 ± 2) mm × (10 ± 1) mm

C test piece

D outer part of the main frame, e.g. ~100 mm × 50 mm × 8 mm

E inner part of the main frame, e.g. ≤100 mm × 50 mm

Figure 5 — Example of clamping of the test piece

5.1.3 Impactor, of type 5.1.3.1 or 5.1.3.2, suitable for use with the suspension device (5.1.4) and release mechanism (5.1.5).

5.1.3.1 Lead shot bag.

5.1.3.1.1 General description.

The bag (see Figure 6) is a reinforced leather bag filled with chilled lead shot of diameter (2,5 ± 0,1) mm providing a total mass of (45 ± 0,1) kg. The bag is constructed of 1,5 mm thick pliable leather (see Figure 7).

5.1.3.1.2 Method of manufacture.

See Annex A.

5.1.3.1.3 Maintenance. Inspect the shot bag impactor at intervals of 1 000 impacts and calibrate as required. If the tape of the impactor is damaged (e.g. when glass fibres are apparent, or the leather bag

© ISO 2015 – All rights reserved

AVA Documents Document Sharing Hub
Full document details: BS ISO 29584:2015

is visible), it shall be removed and replaced according to Annex A. When the deformation of the impactor is beyond the tolerances, the impactor shall be reshaped manually. If the impactor cannot be restored to within the tolerances, it shall be replaced.

Remove all glass particles embedded in the surface of the impactor.

The tolerances of dimensions for the impactor are shown in Figure 6.

© ISO 2015 – All rights reserved
Documents
Document Sharing Hub
Full document details: BS ISO 29584:2015