BRITISH STANDARD

BS ISO 3070-1:2007

Machine tools — Test conditions for testing the accuracy of boring and milling machines with horizontal spindle —

Part 1: Machines with fixed column and movable table

ICS 25.080.20

NO COPYING WITHOUT BSI PERMISSION EXCEPT AS PERMITTED BY COPYRIGHT LAW

Document Sharing Hub
British Standards

Full document details: BS ISO 3070-1:2007

National foreword

This British Standard is the UK implementation of ISO 3070-1:2007. It supersedes BS ISO 3070-2:1997 which is withdrawn.

The UK participation in its preparation was entrusted to Technical Committee MTE/1, Machine tools.

A list of organizations represented on this committee can be obtained on request to its secretary.

This publication does not purport to include all the necessary provisions of a contract. Users are responsible for its correct application.

Compliance with a British Standard cannot confer immunity from legal obligations.

This British Standard was published under the authority of the Standards Policy and Strategy Committee on 31 January 2008

© BSI 2008

ISBN 978 0 580 54350 0

Amendments/corrigenda issued since publication

Date	Comments

Documents
Document Sharing Hub

Full document details: BS ISO 3070-1:2007

INTERNATIONAL STANDARD

ISO 3070-1

Third edition
2007-12-15

Machine tools — Test conditions for testing the accuracy of boring and milling machines with horizontal spindle —

Part 1: Machines with fixed column and movable table

Machines-outils — Conditions d'essai pour le contrôle de l'exactitude des machines à aléser et à fraiser à broche horizontale —

Partie 1: Machines à montant fixe et à table mobile

Reference number
ISO 3070-1:2007(E)

Documents
Document Sharing Hub

Full document details: BS ISO 3070-1:2007

Documents
Document Sharing Hub

Full document details: BS ISO 3070-1:2007

Contents

Page

Foreword iv
Introduction v
1 Scope 1
2 Normative references 1
3 Terminology and designation of axes 2
4 Definition of the machining operations carried out on these machines 3
4.1 Boring operations 3
4.2 Milling operations 4
5 Special remarks concerning particular elements 4
5.1 Spindle heads 4
5.2 Tables 5
5.3 Steady blocks 5
6 Preliminary remarks 5
6.1 Measuring units 5
6.2 Reference to ISO 230-1 5
6.3 Testing sequence 5
6.4 Tests to be performed 5
6.5 Measuring instruments 6
6.6 Machining tests 6
6.7 Software compensation 6
6.8 Minimum tolerance 6
7 Geometric tests 7
7.1 Straightness and angular deviations of coordinate axes 7
7.2 Squareness between coordinate axes 13
7.3 Table 15
7.4 Indexing or rotary table 18
7.5 Boring spindle 21
7.6 Milling spindle 27
7.7 Ram 28
7.8 Integral facing head 31
7.9 Steady block 35
8 Machining tests 36
9 Checking accuracy and repeatability of positioning by numerical control 43
10 Geometric accuracy of axes of rotation of tool-holding spindles 49
Bibliography 51

Documents
Document Sharing Hub

Full document details: BS ISO 3070-1:2007

Foreword

ISO (the International Organization for Standardization) is a worldwide federation of national standards bodies (ISO member bodies). The work of preparing International Standards is normally carried out through ISO technical committees. Each member body interested in a subject for which a technical committee has been established has the right to be represented on that committee. International organizations, governmental and non-governmental, in liaison with ISO, also take part in the work. ISO collaborates closely with the International Electrotechnical Commission (IEC) on all matters of electrotechnical standardization.

International Standards are drafted in accordance with the rules given in the ISO/IEC Directives, Part 2.

The main task of technical committees is to prepare International Standards. Draft International Standards adopted by the technical committees are circulated to the member bodies for voting. Publication as an International Standard requires approval by at least 75 % of the member bodies casting a vote.

Attention is drawn to the possibility that some of the elements of this document may be the subject of patent rights. ISO shall not be held responsible for identifying any or all such patent rights.

ISO 3070-1 was prepared by Technical Committee ISO/TC 39, *Machine tools*, Subcommittee SC 2, *Test conditions for metal cutting machine tools*.

This third edition cancels and replaces ISO 3070-0:1982 and ISO 3070-2:1997, of which it constitutes a technical revision.

ISO 3070 consists of the following parts, under the general title *Machine tools — Test conditions for testing the accuracy of boring and milling machines with horizontal spindle*:

— *Part 1: Machines with fixed column and movable table*

— *Part 2: Machines with movable column and fixed table*

— *Part 3: Machines with movable column and movable table*

Documents
Document Sharing Hub
Full document details: BS ISO 3070-1:2007

Introduction

It is generally accepted that horizontal spindle boring and milling machines fall into three categories characterized by their particular configuration:

a) machines with fixed column and movable table;

b) machines with movable column and fixed table;

c) machines with movable column and movable table.

In the past, all these types of machines and associated terminology were described in ISO 3070-0:1982. The relevant accuracy tests were described in ISO 3070-2:1997, ISO 3070-3:1997, and ISO 3070-4:1998 respectively. However, ISO/TC 39/SC 2 decided to integrate the descriptions and the terminology of these machines into appropriate parts of ISO 3070 describing the accuracy tests and to renumber the parts of this series accordingly.

Documents
Document Sharing Hub

Full document details: BS ISO 3070-1:2007

blank

Documents
Document Sharing Hub

Full document details: BS ISO 3070-1:2007

Machine tools — Test conditions for testing the accuracy of boring and milling machines with horizontal spindle —

Part 1:
Machines with fixed column and movable table

1 Scope

This part of ISO 3070 specifies, with reference to ISO 230-1, ISO 230-2 and ISO 230-7, geometric tests, machining tests, spindle tests and tests for checking the accuracy and repeatability of positioning by numerical control of general purpose, normal accuracy, horizontal spindle boring and milling machines having a fixed column and movable table. This part of ISO 3070 also specifies the applicable tolerances corresponding to these tests.

This type of machine can be provided with spindle heads of different types, such as those with sliding boring spindle and milling spindle, sliding boring spindle and facing head, or ram or milling ram.

This part of ISO 3070 concerns machines having both longitudinal (Z-axis) and transverse (X-axis) movement of the table, a vertical movement of the spindle head (Y axis), movement of the boring spindle or ram (W axis) and, possibly, a feed movement of radial facing slide in the facing head (U axis), and that may include a rotary or indexing table.

NOTE In other parts of ISO 3070 spindle ram movement is designated as the Z axis.

This part of ISO 3070 deals only with the verification of the accuracy of the machine. It does not apply to the operational testing of the machine (e.g. vibration, abnormal noise, stick-slip motion of components) nor to machine characteristics (e.g. speeds, feeds), as such checks are generally carried out before testing the accuracy.

2 Normative references

The following referenced documents are indispensable for the application of this document. For dated references, only the edition cited applies. For undated references, the latest edition of the referenced document (including any amendments) applies.

ISO 230-1:1996, *Test code for machine tools — Part 1: Geometric accuracy of machines operating under no-load or finishing conditions*

ISO 230-2:2006, *Test code for machine tools — Part 2: Determination of accuracy and repeatability of positioning numerically controlled axes*

ISO 230-7:2006, *Test code for machine tools — Part 7: Geometric accuracy of axes of rotation*

ISO 1101:2004, *Geometrical Product Specifications (GPS) — Geometrical tolerancing — Tolerances of form, orientation, location and run-out*

Documents
Document Sharing Hub

Full document details: BS ISO 3070-1:2007

3 Terminology and designation of axes

3.1 General

A boring and milling machine is a machine tool in which the principal cutting motion is the rotation of the cutting tool against the non-rotating workpiece and where the cutting energy is brought by the cutting tool rotation.

The cutting movement is generated by the rotation of the spindle(s) and, possibly, of the facing head.

3.2 Types of movement

The feed movements are as follows:

a) longitudinal, transverse and possibly rotary movements of the table;

b) vertical movement of the spindle head;

c) axial movement of the spindle;

d) possible movement of radial facing slide in the facing head.

Table 1 provides the nomenclature for various structural components of machines shown in Figure 1. Figure 1 shows two possible configurations of boring and milling machines with fixed column and movable table: one with a non-rotary movable table and the other with an integral rotary table.

Table 1 — Nomenclature (see Figure 1)

Figure 1 ref.	English	French	German
1	bed	banc	Maschinenbett
2	column	montant du chariot porte-broche	Maschinenständer
3	spindle head	chariot porte-broche	Spindelstock
4	table saddle	traînard	Bettschlitten
5	table	table	Aufspanntisch
6	rotary table	table pivotante	Drehtisch

Documents
Document Sharing Hub
Full document details: BS ISO 3070-1:2007

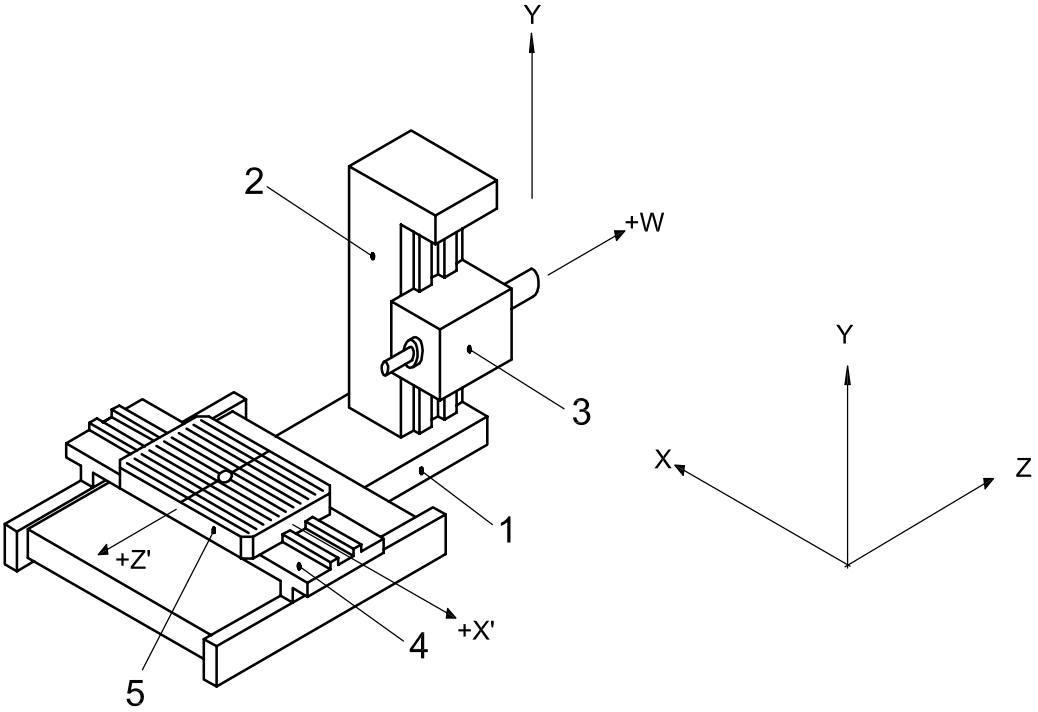

a) Machine with non-rotary movable table

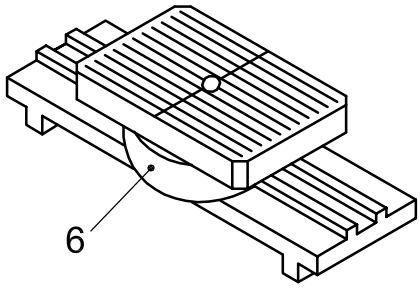

b) Machine slide with integral rotary table

NOTE 1 ISO 841 nomenclature was not used here in respect of the W axis in order to ensure consistency in this part of ISO 3070 for machines with and without W axis.

NOTE 2 For components 1 to 6, see Table 1.

Figure 1 — Machines with movable table with and without integral rotary table

4 Definition of the machining operations carried out on these machines

4.1 Boring operations

Boring is a machining operation for generating holes of various sizes and geometries in which the principal cutting motion is the rotation of a single-point cutting tool against the non-rotating workpiece and where the cutting energy is brought by the cutting tool rotation.

Boring the diameter of cylindrical, conical, blind or through holes to the required size is achieved by using a boring bar to locate the cutting edge of the boring tool in a well-defined position with respect to the axis average line of the boring spindle.

In the case of coaxial bores situated on opposite faces of the same workpiece, the operation may be carried out using a boring bar, supported between the machine boring spindle and the steady stock located on the other side of the table. Alternatively, if the machine has a rotary table, such an operation can be carried out by rotating the table 180° to bore the opposite side of the workpiece with the same boring tool located on the

Documents
Document Sharing Hub

Full document details: BS ISO 3070-1:2007

boring bar that is mounted on the boring spindle without any steady support (reverse boring). Although more economical, this alternative method requires closer tolerances for table angular positioning as well as for the axis of rotation errors.

4.2 Milling operations

Milling is a machining operation to generate non-axisymmetrical (non-rotational) surfaces of various geometries in which the principal cutting motion is the rotation of a cutting tool with multiple cutting edges against the non-rotating workpiece, and where the cutting energy is brought by the cutting tool rotation.

Milling operations mostly involve face milling or end milling. The tools are mounted either in the boring spindle taper (see Figure 2) or, as for face milling cutters, on the milling spindle nose.

5 Special remarks concerning particular elements

5.1 Spindle heads

Reference should be made to Figure 2 for examples of the various types of head. Related nomenclature is given in Table 2.

Facing heads generally have a radial facing slide and are either integral or removable; the latter is considered an accessory.

It should be noted that the integral facing head may not always be mounted onto the milling spindle and may have its own bearing independent from the main spindle bearings.

Table 2 — Nomenclature (see Figure 2)

Figure 2 ref.	English	French	German
1	boring spindle	broche à aléser	Bohrspindel
2	milling spindle	broche à fraiser	Frässpindel
3	facing head	plateau à surfacer	Planscheibe
4	spindle head with facing head	tête de broche avec plateau à surfacer	Spindelstock mit Planscheibe
5	ram	coulisseau	Traghülse

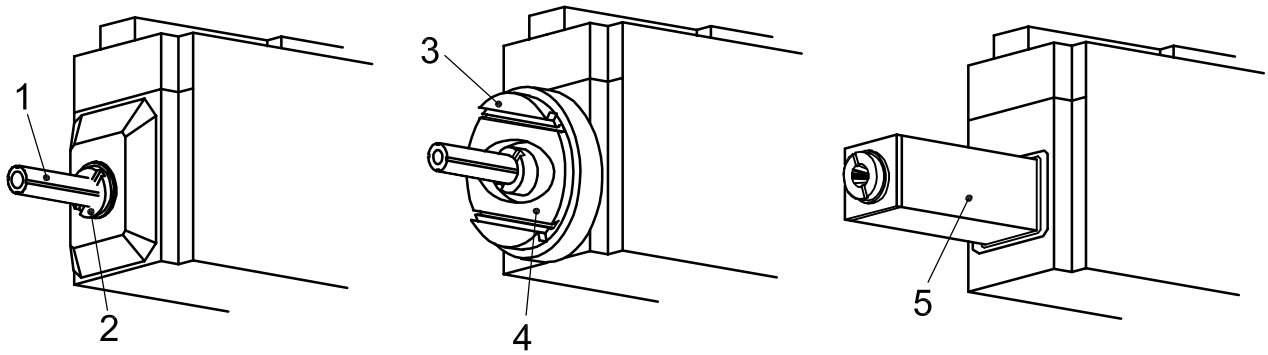

a) Spindle head for boring and milling **b) Spindle head with facing head** **c) Spindle head with ram**

NOTE For elements 1 to 5, see Table 2.

Figure 2 — Types of spindle head

Documents
Document Sharing Hub
Full document details: BS ISO 3070-1:2007

5.2 Tables

Tables may have various rectilinear and rotary movements for positioning and feed.

The two main rectilinear movements, the directions of which are perpendicular to each other, are used either for positioning the table or giving specified work feeds.

The rotary movement of the table may be used

a) for angular positioning in the plane of the table rotation,

b) as a circular work feed for milling operations,

c) for circular cutting movements for turning operations.

5.3 Steady blocks

Due to the decreasing use of long boring bars, there is an increasing tendency to treat steady blocks as optional parts or auxiliary equipment.

6 Preliminary remarks

6.1 Measuring units

In this part of ISO 3070, all linear dimensions, deviations and corresponding tolerances are expressed in millimetres; angular dimensions are expressed in degrees, and angular deviations and the corresponding tolerances are expressed in ratios (e.g. 0,00x/1 000) as the primary method; but in some cases microradians or arcseconds may be used for clarification purposes. The equivalence of the following expressions should always be kept in mind:

$$0{,}010/1\,000 = 10 \times 10^{-6} = 10\ \mu\text{rad} \approx 2\ \text{arcsec}$$

6.2 Reference to ISO 230

In applying this part of ISO 3070, reference shall be made to ISO 230-1, especially for the installation of the machine before testing, warming up of the spindle and other moving components, description of the measuring methods and recommended accuracy of the test equipment.

In the “Observations” block of the tests described in the following sections, the instructions are to be followed by reference to the corresponding clause or subclause of ISO 230-1, ISO 230-2 or ISO 230-7, in cases where the test concerned is in compliance with the specifications of one or another of those parts of ISO 230.

6.3 Testing sequence

The sequence in which the tests are presented in this part of ISO 3070 in no way defines the practical order of testing. In order to make the mounting of instruments or gauging easier, tests may be performed in any order.

6.4 Tests to be performed

When testing a machine, it is not always necessary or possible to carry out all the tests described in this part of ISO 3070. When the tests are required for acceptance purposes, it is for the user to choose, in agreement with the supplier/manufacturer, those tests relating to the components and/or the properties of the machine which are of interest. These tests are to be clearly stated when ordering a machine. The mere reference to this part of ISO 3070 for the acceptance tests, without specifying the tests carried out or without agreement on the relevant expenses, cannot be considered binding for any contracting party.

AVA Documents
Document Sharing Hub

Full document details: BS ISO 3070-1:2007

6.5 Measuring instruments

The measuring instruments indicated in the tests described in the following sections are examples only.

Other instruments capable of measuring the same quantities and having the same, or a smaller, measuring uncertainty may be used. Linear displacement sensors shall have a resolution of 0,001 mm or better.

6.6 Machining tests

Machining tests shall be made with finishing cuts only, not with roughing cuts, which are liable to generate appreciable cutting forces.

6.7 Software compensation

When built-in software facilities are available for compensating geometric, positioning, contouring and thermal deviations, their use during these tests should be based on agreement between the user and the supplier/manufacturer. When the software compensation is used, this shall be stated in the test report.

6.8 Minimum tolerance

When the tolerance for a geometric test is established for a measuring length different from that given in this part of ISO 3070 (see ISO 230-1:1996, 2.311), it shall be taken into consideration that the minimum value of tolerance is 0,005 mm.

Documents
Document Sharing Hub
Full document details: BS ISO 3070-1:2007

7 Geometric tests

7.1 Straightness and angular deviations of linear axes

Object **G1**

Checking of the straightness of the table saddle movement (Z axis):

a) in the YZ plane (vertical plane) (EYZ);

b) in the ZX plane (horizontal plane) (EXZ).

Diagram

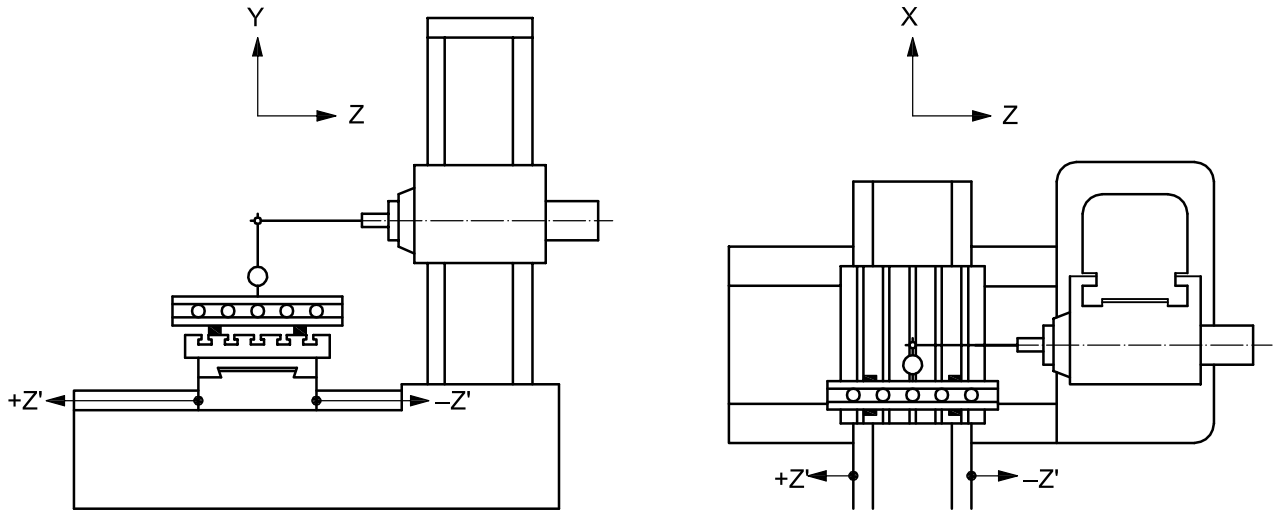

a) b)

Tolerance	**Measured deviation**
a) and b)	a)
0,02 for measuring lengths up to 1 000	b)
0,03 for measuring lengths above 1 000	
Local tolerance: 0,006 for any measuring length of 300	

Measuring instruments

Straightedge, linear displacement sensor/support and gauge blocks or optical methods

Observations and references to ISO 230-1:1996 **5.232.11 and 5.232.13**

Lock the table in the mid-travel position in the X-axis direction and lock the spindle head in mid-travel.

Set a straightedge on the table, parallel to the table saddle movement (Z axis) for a) vertically and b) horizontally (*parallel* means that the reading of the linear displacement sensor touching the straightedge at both ends of the movement is the same value).

If the spindle can be locked, mount the linear displacement sensor on it. If the spindle cannot be locked, mount the linear displacement sensor on the spindle head.

The stylus shall be normal to the reference face of the straightedge.

Traverse the table saddle in the Z-axis direction and note the readings.

AVA Documents
Document Sharing Hub

Full document details: BS ISO 3070-1:2007

Object **G2**

Checking of the angular deviation of the table saddle movement (Z axis):

a) in the YZ plane (EAZ: pitch);

b) in the XY plane (ECZ: roll);

c) in the ZX plane (EBZ: yaw).

Diagram

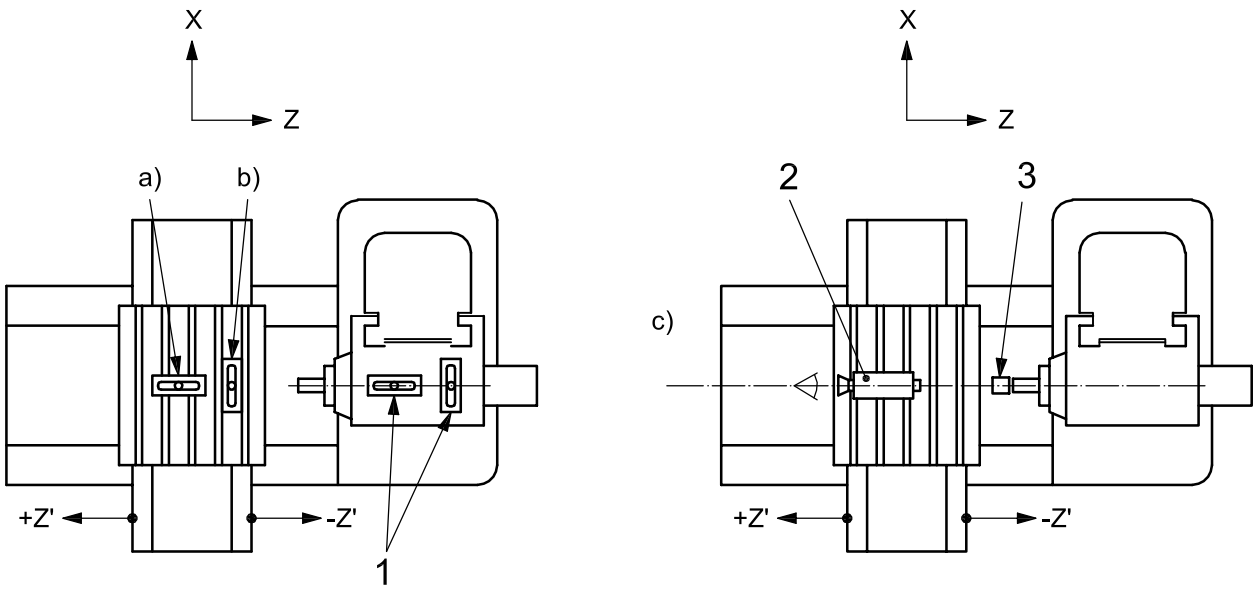

Key

1 reference level

2 autocollimator

3 mirror

Tolerance	**Measured deviation**
a), b) and c)	a)
0,04/1 000	b)
Local tolerance: 0,02/1 000 for any measuring length of 300	c)

Measuring instruments

a) Precision level, laser interferometer or other optical angular deviation measuring instruments

b) Precision level

c) Laser interferometer or other optical angular deviation measuring instruments

Observations and references to ISO 230-1:1996 **5.231.3 and 5.232.2**

The level or instrument shall be placed on the table:

a) (EAZ: pitch) in the Z-axis direction (set vertically for an autocollimator);

b) (ECZ: roll) in the X-axis direction

c) (EBZ: yaw) in the Z-axis direction (set horizontally for an autocollimator).

The reference level shall be located on the spindle head, and the spindle head shall be in mid-travel.

When Z-axis motion causes an angular movement of both spindle head and table, differential measurements of the two angular movements shall be made and this shall be stated.

Measurements shall be carried out at a minimum of five positions equally spaced along the travel in both directions of the movement.

Documents
Document Sharing Hub
Full document details: BS ISO 3070-1:2007

Object **G3**

Checking of the straightness of the table movement (X axis):

a) in the XY plane (vertical plane) (EYX);

b) in the ZX plane (horizontal plane) (EZX).

Diagram

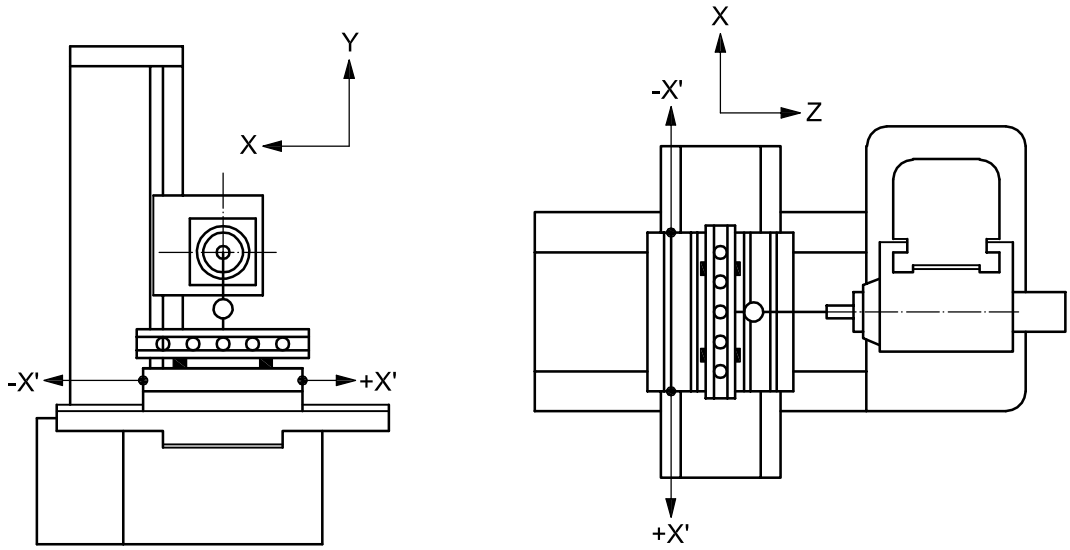

a) b)

Tolerance	**Measured deviations**
a) and b)	a)
0,02 for measuring lengths up to 1 000	b)
Add 0,01 to the preceding tolerance for each 1 000 increase in length beyond 1 000	
Maximum tolerance: 0,05	
Local tolerance: 0,006 for any measuring length of 300	

Measuring instruments

Straightedge, linear displacement sensor/support and gauge blocks or optical methods

Observations and references to ISO 230-1:1996 **5.232.11 and 5.232.13**

Lock the saddle in mid-travel in the Z-axis direction and lock the spindle head in mid-travel.

Set a straightedge at the middle position of the table, parallel to the table movement (X axis) for a) vertically and b) horizontally (*parallel* means that the reading of the linear displacement sensor touching the straightedge at both ends of the movement is the same value).

If the spindle can be locked, mount the linear displacement sensor on it. If the spindle cannot be locked, mount the linear displacement sensor on the spindle head.

The stylus shall be normal to the reference face of the straightedge.

Traverse the table in the X-axis direction and note the readings.

Documents
Document Sharing Hub

Full document details: BS ISO 3070-1:2007

Object **G4**

Checking of the angular deviation of the table movement (X axis):

a) in the XY plane (ECX: pitch);

b) in the YZ plane (EAX: roll);

c) in the ZX plane (EBX: yaw).

Diagram

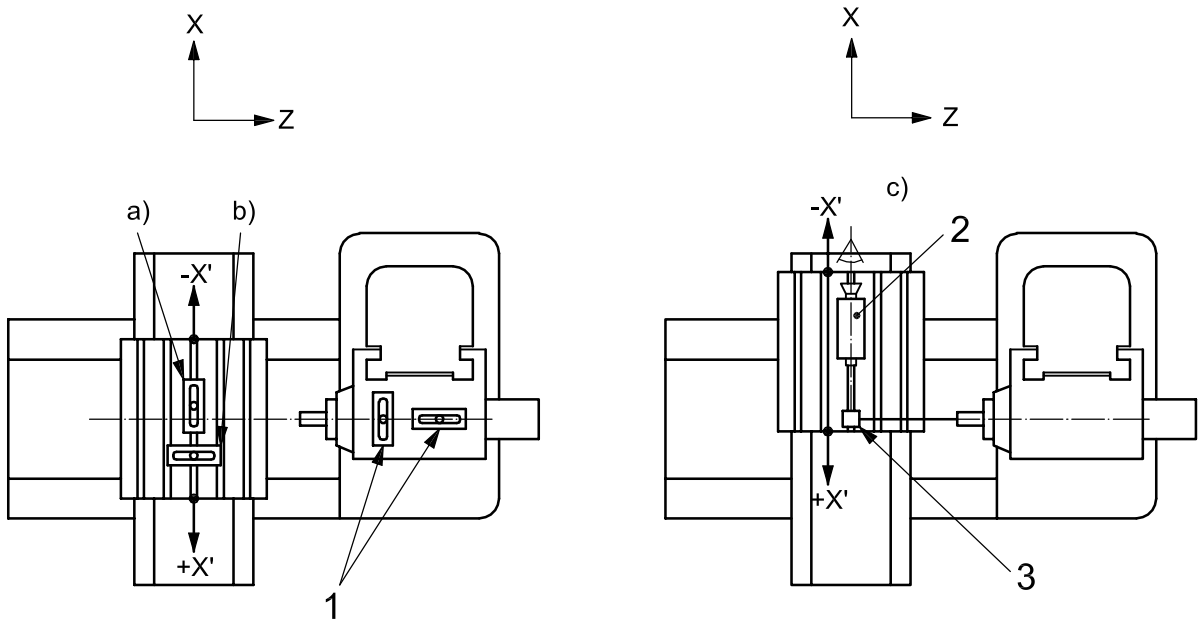

Key

1 reference level

2 autocollimator

3 mirror

Tolerance	**Measured deviations**
a), b) and c)	a)
0,04/1 000	b)
Local tolerance: 0,02/1 000 for any measuring length of 300	c)

Measuring instruments

a) Precision level, laser interferometer or other optical angular deviation measuring instruments

b) Precision level

c) Laser interferometer or other optical angular deviation measuring instruments

Observations and references to ISO 230-1:1996 **5.231.3 and 5.232.2**

The level or instrument shall be placed on the table:

a) (ECX: pitch) in the X-axis direction (set vertically for an autocollimator);

b) (EAX: roll) in the Z-axis direction

c) (EBX: yaw) in the X-axis direction (set horizontally for an autocollimator).

The reference level shall be located on the spindle head, which shall be in mid-travel.

When X-axis motion causes an angular movement of both spindle head and work-holding table, differential measurements of the two angular movements shall be made and this shall be stated.

Measurements shall be carried out at a minimum of five positions equally spaced along the travel in both directions of the movement.

Documents
Document Sharing Hub
Full document details: BS ISO 3070-1:2007