BS ISO 3070-2:2016
Incorporating corrigendum July 2018

BSI Standards Publication

Machine tools — Test conditions for testing the accuracy of boring and milling machines with horizontal spindle

Part 2: Machines with movable column along the X-axis (floor type)

Documents
Document Sharing Hub

Full document details: BS ISO 3070-2:2016

National foreword

This British Standard is the UK implementation of ISO 3070-2:2016. It supersedes BS ISO 3070-2:2007, which is withdrawn.

The UK participation in its preparation was entrusted to Technical Committee MTE/1/2, Machine tools - Accuracy.

A list of organizations represented on this committee can be obtained on request to its secretary.

This publication does not purport to include all the necessary provisions of a contract. Users are responsible for its correct application.

© The British Standards Institution 2018
Published by BSI Standards Limited 2018

ISBN 978 0 539 01809 7

ICS 25.080.20

Compliance with a British Standard cannot confer immunity from legal obligations.

This British Standard was published under the authority of the Standards Policy and Strategy Committee on 31 August 2016.

Amendments/corrigenda issued since publication

Date	Text affected
31 July 2018	Implementation of ISO corrected text 15 December 2016: See ISO foreword for details

Documents
Document Sharing Hub

Full document details: BS ISO 3070-2:2016

INTERNATIONAL STANDARD

ISO 3070-2

Fourth edition
2016-08-01

Corrected version
2016-12-15

Machine tools — Test conditions for testing the accuracy of boring and milling machines with horizontal spindle —

Part 2: Machines with movable column along the X-axis (floor type)

Machines-outils — Conditions d'essai pour le contrôle de l'exactitude des machines à aléser et à fraiser à broche horizontale —

Partie 2: Machines à montant mobile le long de l'axe X (de type au sol)

Reference number
ISO 3070-2:2016(E)

Documents
Document Sharing Hub

© ISO 2016

Full document details: BS ISO 3070-2:2016

COPYRIGHT PROTECTED DOCUMENT

© ISO 2016, Published in Switzerland

All rights reserved. Unless otherwise specified, no part of this publication may be reproduced or utilized otherwise in any form or by any means, electronic or mechanical, including photocopying, or posting on the internet or an intranet, without prior written permission. Permission can be requested from either ISO at the address below or ISO's member body in the country of the requester.

ISO copyright office
Ch. de Blandonnet 8 • CP 401
CH-1214 Vernier, Geneva, Switzerland
Tel. +41 22 749 01 11
Fax +41 22 749 09 47
copyright@iso.org
www.iso.org

© ISO 2016 – All rights reserved

Documents
Document Sharing Hub

Full document details: BS ISO 3070-2:2016

Contents

Page

Foreword ... **iv**
Introduction ... **v**
1 Scope ... **1**
2 Normative references ... **1**
3 Terms and definitions ... **2**
4 Terminology and designation of axes ... **2**
5 Special remarks concerning particular elements ... **3**
5.1 Spindle heads ... 3
5.2 Tables ... 4
6 Preliminary remarks ... **5**
6.1 Measurement units ... 5
6.2 Reference to ISO 230 series of standards ... 5
6.3 Testing sequence ... 5
6.4 Tests to be performed ... 5
6.5 Measuring instruments ... 5
6.6 Software compensation ... 6
6.7 Minimum tolerance ... 6
7 Geometric tests ... **7**
7.1 Straightness and angular deviations of linear axes ... 7
7.2 Squareness and parallelism between linear axes ... 13
7.3 Fixed table independent of the machine ... 18
7.4 Boring spindle ... 22
7.5 Milling spindle ... 26
7.6 Rotary and movable table ... 28
7.7 Indexing or rotary tables ... 35
8 Checking accuracy and repeatability of positioning by numerical control ... **37**
Annex A (informative) **Geometric accuracy of axis of rotation** ... **44**
Annex B (normative) **Tests of accessory facing heads [see Figure 2 b)]** ... **48**
Annex C (informative) **Nomenclature of machine tool components in other languages** ... **52**
Bibliography ... **53**

© ISO 2016 – All rights reserved

Documents
Document Sharing Hub
Full document details: BS ISO 3070-2:2016

Foreword

ISO (the International Organization for Standardization) is a worldwide federation of national standards bodies (ISO member bodies). The work of preparing International Standards is normally carried out through ISO technical committees. Each member body interested in a subject for which a technical committee has been established has the right to be represented on that committee. International organizations, governmental and non-governmental, in liaison with ISO, also take part in the work. ISO collaborates closely with the International Electrotechnical Commission (IEC) on all matters of electrotechnical standardization.

The procedures used to develop this document and those intended for its further maintenance are described in the ISO/IEC Directives, Part 1. In particular the different approval criteria needed for the different types of ISO documents should be noted. This document was drafted in accordance with the editorial rules of the ISO/IEC Directives, Part 2 (see www.iso.org/directives).

Attention is drawn to the possibility that some of the elements of this document may be the subject of patent rights. ISO shall not be held responsible for identifying any or all such patent rights. Details of any patent rights identified during the development of the document will be in the Introduction and/or on the ISO list of patent declarations received (see www.iso.org/patents).

Any trade name used in this document is information given for the convenience of users and does not constitute an endorsement.

For an explanation on the meaning of ISO specific terms and expressions related to conformity assessment, as well as information about ISO's adherence to the World Trade Organization (WTO) principles in the Technical Barriers to Trade (TBT) see the following URL: www.iso.org/iso/foreword.html

The committee responsible for this document is ISO/TC 39 *Machine tools*, Subcommittee SC 2 *Test conditions for metal cutting machine tools*.

This fourth edition cancels and replaces the third edition (ISO 3070-2:2007), which has been technically revised.

This corrected version of ISO 3070-2:2016 incorporates the following corrections:

— the Persian language nomenclature given in Table C.1 and Table C.2 has been corrected.

ISO 3070 consists of the following parts under the general title *Machine tools — Test conditions for testing the accuracy of boring and milling machines with horizontal spindle*:

— *Part 1: Machines with fixed column and table movable on a cross slide*

— *Part 2: Machines with movable column along the X-axis (floor type)*

— *Part 3: Machines with movable column along the Z-axis (T-bed type)*

© ISO 2016 – All rights reserved
Documents
Document Sharing Hub
Full document details: BS ISO 3070-2:2016

Introduction

Most horizontal spindle boring and milling machines fall into the following three categories characterized by their particular configuration:

a) machines with fixed column and table movable on a cross slide;

b) machines with movable column along the X-axis (floor type);

c) machines with movable column along the Z-axis (T-bed type).

The object of ISO 3070 is to supply information as wide and comprehensive as possible on tests which can be carried out for comparison, acceptance, maintenance or any other purpose.

This revision of this part of ISO 3070 provides additional information on tests to be performed and specifies new tolerances to better reflect the current technology.

Machining tests have been excluded from this revision of this part of ISO 3070 considering that such tests can typically be the object of agreement between manufacturer/supplier and user, (possibly) including tests that are specified in ISO 10791-7.

© ISO 2016 – All rights reserved

Documents
Document Sharing Hub
Full document details: BS ISO 3070-2:2016

Documents
Document Sharing Hub

Machine tools — Test conditions for testing the accuracy of boring and milling machines with horizontal spindle —

Part 2: Machines with movable column along the X-axis (floor type)

1 Scope

This part of ISO 3070 specifies, with reference to ISO 230-1, ISO 230-7 and ISO 230-2, geometric tests, spindle tests and tests for checking the accuracy and repeatability of positioning by numerical control of horizontal spindle boring and milling machines having a movable column along the X-axis and also specifies the applicable tolerances corresponding to general-purpose, normal accuracy machines.

This type of machines are usually provided with sliding boring spindles and can be provided with universal spindle heads of the following types, whose test conditions are covered by ISO 17543-1:

— fixed or indexable heads, with accessory spindle(s) square to the Z-axis, with or without one spindle parallel to the Z-axis;

— 45° split indexable heads, with mechanical indexing of the different angular positions of the two bodies (e.g. Hirth couplings);

— 45° split continuous heads, provided with continuous positioning of the two numerically controlled axes;

— swivel heads, with two numerically controlled rotary axes perpendicular to each other.

Test conditions for accessory facing heads are specified in Annex B.

This part of ISO 3070 concerns machines having movement of the column on the bed (X-axis), vertical movement of the spindle head on the column (Y-axis), axial movement of the ram (Z-axis), axial movement of the boring spindle (W-axis), and, in most cases, one or more tables moving on a bed parallel to the spindle (R-axis) and rotating around a vertical axis (B-axis).

This part of ISO 3070 deals only with the verification of the accuracy of the machine. It does not apply to the operational testing of the machine (e.g. vibration, abnormal noise, stick-slip motion of components) nor to machine characteristics (e.g. speeds, feeds), as such checks are generally carried out before testing the accuracy.

2 Normative references

The following documents, in whole or in part, are normatively referenced in this document and are indispensable for its application. For dated references, only the edition cited applies. For undated references, the latest edition of the referenced document (including any amendments) applies.

ISO 230-1:2012, *Test code for machine tools — Part 1: Geometric accuracy of machines operating under no-load or quasi-static conditions*

ISO 230-2:2014, *Test code for machine tools — Part 2: Determination of accuracy and repeatability of positioning of numerically controlled axes*

ISO 230-7:2015, *Test code for machine tools — Part 7: Geometric accuracy of axes of rotation*

© ISO 2016 – All rights reserved

Documents
Document Sharing Hub
Full document details: BS ISO 3070-2:2016

3 Terms and definitions

For the purposes of this document, the following terms and definitions apply.

3.1
boring operation
machining operation for generating holes of various sizes and geometries in which the principal cutting motion is the rotation of a single-point cutting tool against the non-rotating workpiece and where the cutting energy is brought by the cutting tool rotation

Note 1 to entry: Boring the diameter of cylindrical, conical, blind or through holes to the required size is achieved by using a boring bar to locate the cutting edge of the boring tool in a well-defined position with respect to the axis average line of the boring spindle.

Note 2 to entry: In the case of coaxial bores situated on opposite faces of the same workpiece, the operation may be carried out using the sliding boring spindle, if it can work through all the workpiece, or turning the table 180º to bore the opposite side of the workpiece (reverse boring).

3.2
milling operation
machining operation to generate surfaces of various geometries in which the principal cutting motion is the rotation of a cutting tool with multiple cutting edges against the non-rotating workpiece and where the cutting energy is brought by the cutting tool rotation

Note 1 to entry: Milling operations mostly involve face milling or end milling. The tools are mounted either in the boring spindle taper (see Figure 2) or, as for face milling cutters, on the milling spindle nose.

3.3
boring and milling machine
machine tool in which boring and milling operations are executed

4 Terminology and designation of axes

In a boring and milling machine, cutting movement is generated by the rotation of the spindle(s) and, possibly, of the facing head.

The feed movements are as follows:

a) transverse movements of the column on the bed (X-axis);

b) vertical movement of the spindle head (Y-axis);

c) axial movement of the ram (Z-axis);

d) axial movement of the spindle (W-axis);

e) axial movement of the table (R'-axis), where available;

f) possible (optional) movement of radial facing slide (U-axis);

g) possible (optional) movement of the rotary table (B'-axis).

Figure 1 shows two typical configurations of such machines.

The designation of the configuration with fixed table is: w b X Y Z W (C) t whereas the designation of the configuration with roto-translating table is: w B' R' b X Y Z W (C) t.

NOTE The foundation is very important for these machine tool configurations. The designation "b" for these machines typically includes the bed on the workpiece side, the foundation, and the bed on the tool side.

Table 1 provides the nomenclature for various structural components of machines shown in Figure 1.

© ISO 2016 – All rights reserved
Documents
Document Sharing Hub
Full document details: BS ISO 3070-2:2016

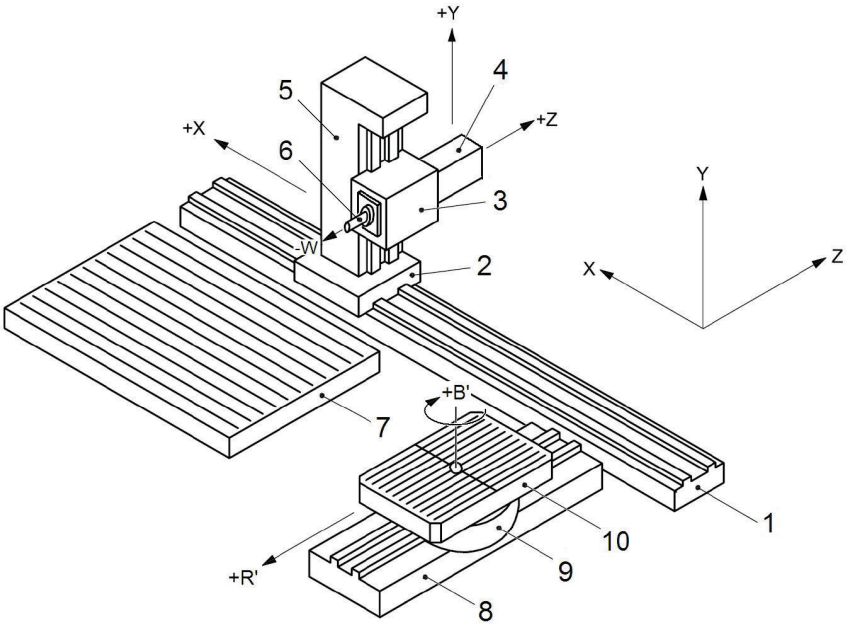

NOTE For elements 1 to 10, see Table 1.

Figure 1 — Machine with movable column along the X-axis with (optional) roto-translating table

Table 1 — Nomenclature (see Figure 1)

Figure 1 ref.	English	French	Russian
1	bed	banc	станина
2	column base	base du montant	основание стойки
3	spindle head	chariot porte-broche	шпиндельная бабка
4	ram	coulant	подвижный корпус шпинделя
5	column	montant	стойка
6	spindle	broche	шпиндель
7	fixed table	table fixe	неподвижный стол
8	table bed	banc de la table	основание стола
9	rotary table saddle	traînard de la table rotative	каретка поворотного стола
10	rotary table	table rotative	поворотный стол
NOTE In addition to the terms used in the three ISO official languages, presented in this table, Table C.1 provides the equivalent terms in Italian and Persian; these are published under the responsibility of the member body for Italy (UNI) and Iran (ISIRI) and are given for information only. Only the terms given in the official languages can be considered as ISO terms.			

5 Special remarks concerning particular elements

5.1 Spindle heads

Reference should be made to Figure 2 for examples of the various types of head. Related nomenclature is given in Table 2.

Facing heads generally have a radial facing slide and in most cases are accessories. Relevant geometric tests are specified in Annex B.

© ISO 2016 – All rights reserved

Documents
Document Sharing Hub
Full document details: BS ISO 3070-2:2016

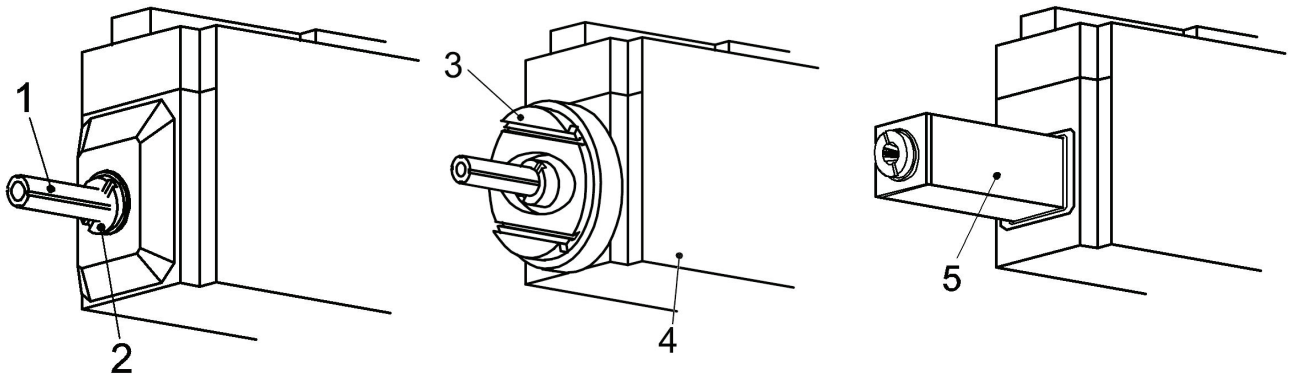

a) Headstock for boring and milling **b) Headstock with facing head** **c) Headstock with ram**

NOTE For elements 1 to 5, see Table 2.

Figure 2 — Types of headstocks

Table 2 — Nomenclature (see Figure 2)

Figure 2 ref.	English	French	Russian
1	boring spindle	broche d'alésage	расточный шпиндель
2	milling spindle	broche de fraisage	фрезерный шпиндель
3	facing head	plateau à surfacer	планшайба
4	headstock with facing head	bélier avec plateau à surfacer	шпиндельная бабка с планшайбой
5	ram	coulant	подвижный корпус шпинделя

NOTE In addition to the terms used in the three ISO official languages, given in this table, Table C.2 provides the equivalent terms in Italian and Persian; these are published under the responsibility of the member body for Italy (UNI) and Iran (ISIRI) and are given for information only. Only the terms given in the official languages can be considered as ISO terms.

5.2 Tables

In most cases, this type of machines is provided with both fixed tables and movable tables with linear and rotary movements.

The rotary movement of the table may be used for the following purposes:

a) angular positioning of the workpiece;

b) as a circular work feed for milling operations;

c) circular cutting movements for turning operations.

© ISO 2016 – All rights reserved
Documents
Document Sharing Hub
Full document details: BS ISO 3070-2:2016

6 Preliminary remarks

6.1 Measurement units

In this part of ISO 3070, all linear dimensions and deviations are expressed in millimetres. All angular dimensions are expressed in degrees. Angular deviations are, in principle, expressed in ratios but in some cases, microradians or arcseconds may be used for clarification purposes. The following expression should be used for the conversion of the units of angular deviations or tolerances:

0,010/1 000 = 10 µrad ≈ 2”

6.2 Reference to ISO 230 series of standards

In applying this part of ISO 3070, reference shall be made to ISO 230-1, especially for the installation of the machine before testing, warming up of the spindle and other moving components, description of the measuring methods and recommended accuracy of the test equipment.

No tests related to checking thermal effects, based on ISO 230-3, are included in this part of ISO 3070. If such tests are of interest, relevant tests in ISO 10791-10 shall be referred to.

In the “Observations” block of the tests described in the following subclauses, the instructions are preceeded by a reference to the corresponding clause or subclause in ISO 230-1, ISO 230-2 or ISO 230-7 in cases where the test concerned is in compliance with the specifications of one or another of those parts of ISO 230.

6.3 Testing sequence

The sequence in which the tests are presented in this part of ISO 3070 in no way defines the practical order of testing. In order to make the mounting of instruments or gauging easier, tests may be performed in any order.

It is nevertheless recalled that angular deviations affect straightness measurements; therefore, best practice would suggest to perform tests related to angular error motions prior to straightness measurements.

6.4 Tests to be performed

When testing a machine, it is not always necessary or possible to carry out all the tests described in this part of ISO 3070. When the tests are required for acceptance purposes, it is up to the user to choose, in agreement with the supplier/manufacturer, those tests relating to the components and/or the properties of the machine which are of interest. ISO 230-1:2012, Annex A provides valuable information about selection of primary and secondary axes and associated tests. These tests are to be clearly stated when ordering a machine. The mere reference to this part of ISO 3070 for the acceptance tests, without specifying the tests to be carried out or without agreement on the relevant expenses, cannot be considered as binding for any contracting party.

6.5 Measuring instruments

Measuring instruments indicated in the tests described in the following subclauses are examples only. Other instruments capable of measuring the same quantities and having the same, or a smaller, measurement uncertainty can be used. Reference shall be made to ISO 230-1:2012, Clause 5, which indicates the relationship between measurement uncertainties and the tolerances.

When a “dial gauge” is referred to, it can mean not only dial test indicators (DTI), but any type of linear displacement sensor such as analogue or digital dial gauges, linear variable differential

© ISO 2016 – All rights reserved

AVA Documents Document Sharing Hub
Full document details: BS ISO 3070-2:2016

transformer (LVDTs), linear scale displacement gauges, or non-contact sensors, when applicable to the test concerned (see ISO 230-1:2012, Clause 4).

Similarly, when a "straightedge" is referred to, it can mean any type of straightness reference artefact, such as a granite or ceramic or steel or cast iron straightedge, one arm of a square, one generating line on a cylinder square, any straight path on a reference cube, or a special, dedicated artefact manufactured to fit in the T-slots or other references.

In the same way, when a "square" is mentioned, it can mean any type of squareness reference artefact, such as a granite or ceramic or steel or cast iron square, a cylinder square, a reference cube, or, again, a special, dedicated artefact.

When "3D probe" is referred to, it means three displacement sensors, housed in a nest, used to measure the changes in the position of the centre of a precision sphere; when the nest and the sphere are moved together along a programmed tool path.

6.6 Software compensation

When built-in software facilities are available for compensating geometric, positioning, contouring and thermal deviations, their use during these tests should be based on agreement between manufacturer/supplier and user, with due consideration to the machine tool intended use, e.g. if the intended use of the machine tool is with or without software compensation for geometric errors. When the software compensation is used, this shall be stated in the test report.

It shall be noted that when software compensation is used, some machine tool axes cannot be locked for test purposes.

Valuable information on numerical compensation of geometric errors can be gathered in ISO/TR 16907.

6.7 Minimum tolerance

By mutual agreement, manufacturer/supplier and user can establish the tolerance for a measuring length different from that given in the tests described in the following clauses. However, it shall be considered that the minimum value of tolerance is 0,005 mm.

© ISO 2016 – All rights reserved
Documents
Document Sharing Hub
Full document details: BS ISO 3070-2:2016

7 Geometric tests

7.1 Straightness and angular deviations of linear axes

Object | **G1**

Checking of the straightness of the column movement (X-axis):

a) in the vertical XY plane, E_{YX};

b) in the horizontal ZX plane, E_{ZX}.

Diagram

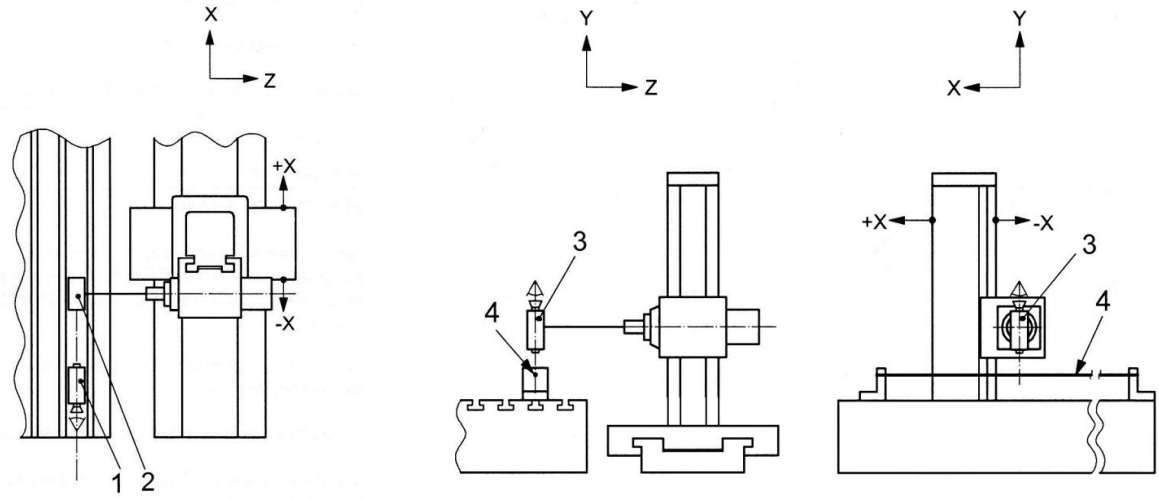

for a) and b) **for b) only**

Key
1 alignment telescope
2 telescope target
3 microscope
4 taut wire

Tolerance

	for measuring length up to:				**Measured deviations**
	5 000	10 000	15 000	20 000	
for a)	0,07	0,14	0,21	0,29	a)
for b)	0,06	0,11	0,16	0,21	b)

For measuring lengths over 20 000, the tolerance shall be agreed upon between manufacturer/supplier and user.

Measuring instruments

Optical methods and, for b) only, microscope and taut wire.

Observations and references to ISO 230-1:2012, 8.2.2.1 and 8.2.2.3

a) Taut wire is not recommended because of the sag of the wire. The alignment telescope may be fixed on the work-holding table such that the optical beam is parallel to the X-axis movement of the column or the lack of parallelism shall be considered in the measurement.

If the spindle can be locked, the telescope target may be mounted on it. If the spindle cannot be locked, mount the telescope target on the spindle head.

b) The microscope shall be fixed on the spindle, if it can be locked, or on the spindle head.

For a) and b): Measurements shall be carried out on at least six positions along the travel, with equally spaced steps not exceeding 500.

Measurements shall be at mid travel of the ram travel with the spindle retracted or otherwise, measurement location shall be reported.

© ISO 2016 – All rights reserved

Documents
Document Sharing Hub
Full document details: BS ISO 3070-2:2016

Object	**G2**
Checking of the angular deviation of the column movement (X-axis): a) in the XY plane, E_{CX} (pitch); b) in the YZ plane, E_{AX} (roll); c) in the ZX plane, E_{BX} (yaw).	

Diagram

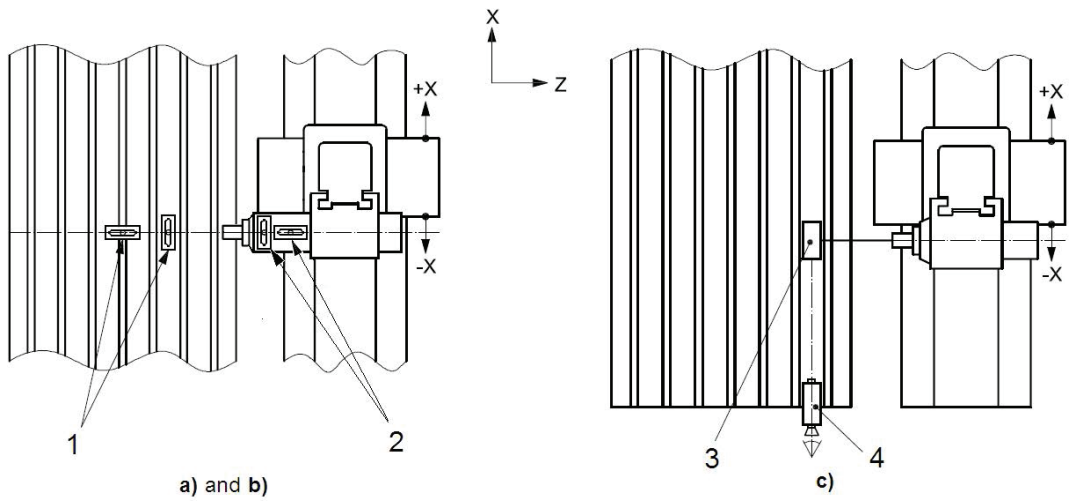

Key
1 reference levels
2 measuring levels
3 mirror
4 auto-collimator

Tolerance	**Measured deviations**
for a), b) and c):	
X ≤ 4 000: 0,04/1 000	a)
X > 4 000: 0,06/1 000	b)
Local tolerance: 0,02/1 000 for any measuring length of 500	c)

Measuring instruments

a) Precision level, laser interferometer or other optical angular deviation measuring instruments.

b) Precision level.

c) Laser interferometer or other optical angular deviation measuring instruments.

Observations and references to ISO 230-1:2012, 3.4.16 and 8.4

The measuring level or the mirror shall be placed on the ram.

a) E_{CX} (pitch) in the X-axis direction (with optical instruments set vertically).

b) E_{AX} (roll) in the Z-axis direction.

c) E_{BX} (yaw) with optical instruments set horizontally.

When levels are used, a reference level shall be located on the fixed table and the ram shall be in the middle of the travel range (Z-axis). Several preliminary movements of the column should be carried out with the reference level in different positions on the fixed table in order to check whether the X-axis motion causes an angular movement of any part of the fixed table or the bed(s) of the rotary table(s). In this last case, differential measurements of the two angular movements shall be made and this shall be stated.

For a), b) and c): Measurements shall be carried out on at least six positions along the travel, with equally spaced steps not exceeding 500.

Measurement location shall be reported.

© ISO 2016 – All rights reserved
Documents
Document Sharing Hub
Full document details: BS ISO 3070-2:2016

Object	**G3**
Checking of the straightness of the ram movement (Z-axis): a) in the vertical YZ plane, E_{YZ}; b) in the horizontal ZX-plane, E_{XZ}.	

Diagram

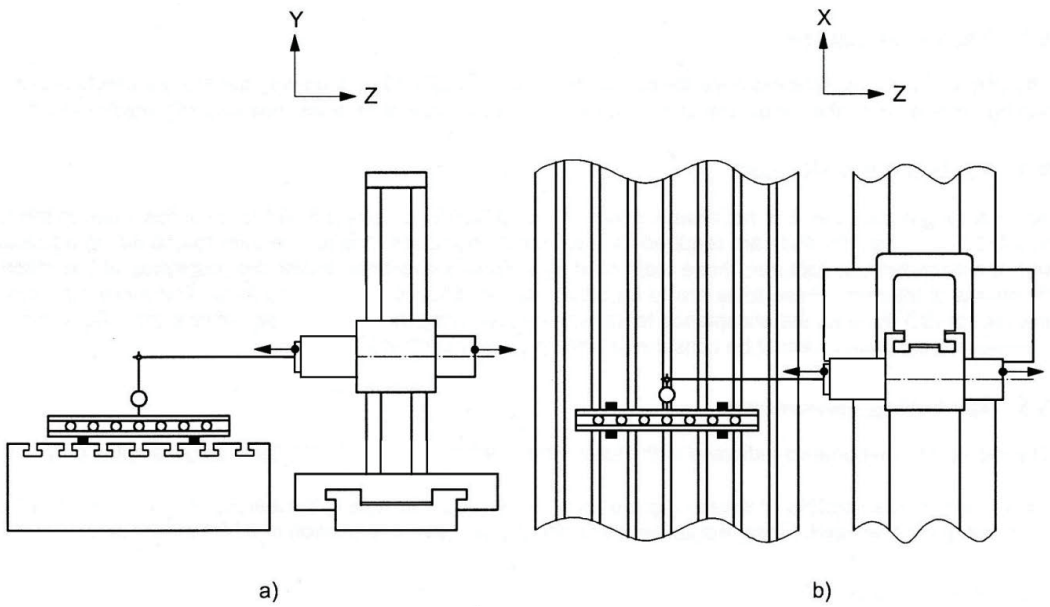

Tolerance	for measuring lengths up to:			**Measured deviations**
	1 000	1 500	2 000	a)
for a) and b):	0,02	0,03	0,04	b)

Local tolerance: 0,006 for any measuring length of 300.

For measuring lengths over 2 000, the tolerance shall be agreed upon between manufacturer/supplier and user.

Measuring instruments

Dial gauge and straightedge with gauge blocks or optical methods.

Observations and references to ISO 230-1:2012, 8.2.2.1 and 8.2.2.3

Set a straightedge on the table, parallel to the ram movement (Z-axis) for a) vertically and b) horizontally, or the lack of parallelism shall be considered in the measurement.

If the spindle can be locked, the dial gauge may be mounted on it. If the spindle cannot be locked, the dial gauge shall be mounted on the ram face. The stylus shall be normal to the reference face of the straightedge.

Measurements shall be carried out on at least six positions along the travel, in both direction of motion, with equally spaced steps not exceeding 300.

Measurement location shall be reported.

© ISO 2016 – All rights reserved

Documents
Document Sharing Hub
Full document details: BS ISO 3070-2:2016

Object | **G4**

Checking of the angular deviation of the ram movement (Z-axis):

a) in the vertical YZ plane, E_{AZ} (pitch);

b) in the vertical XY plane, E_{CZ} (roll);

c) in the horizontal ZX plane, E_{BZ} (yaw).

Diagram

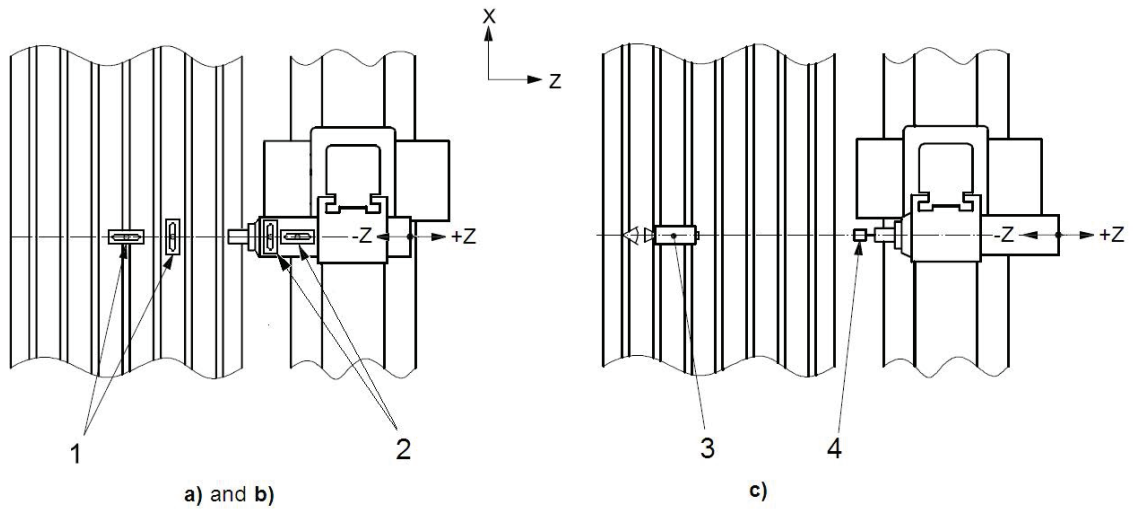

Key
1 reference levels
2 measuring levels
3 auto-collimator
4 mirror

Tolerance	for measuring lengths up to:			**Measured deviations**
	1 000	1 500	2 000	a)
for a), E_{AZ}:	0,06/1 000	0,08/1 000	0,10/1 000	b)
for b), E_{CZ} and c), E_{BZ}:	0,04/1 000	0,05/1 000	0,06/1 000	c)

For measuring lengths over 2 000, the tolerance shall be agreed upon between manufacturer/supplier and user.

Measuring instruments

a) Precision level, laser interferometer or other optical angular deviation measuring instruments.

b) Precision level.

c) Laser interferometers or other optical angular deviation measuring instruments.

Observations and references to ISO 230-1:2012, 3.4.16 and 8.4

The measuring level shall be placed on the ram, the mirror shall be placed on the ram face:

a) E_{AZ}, in the Z-axis direction (with optical instruments set vertically);

b) E_{CZ}, in the X-axis direction;

c) E_{BZ}, with optical instruments set horizontally.

When levels are used, a reference level shall be located on the fixed table (or on the rotary table), to check that the Z-axis motion does not cause an angular movement of any fixed component on the workpiece side. If angular movements are detected, differential measurements shall be carried out and this shall be stated.

For a), b) and c): Measurements shall be carried out on at least six positions along the travel, with equally spaced steps.

© ISO 2016 – All rights reserved
Documents
Document Sharing Hub
Full document details: BS ISO 3070-2:2016

Object	**G5**

Checking of the straightness of the spindle head movement (Y-axis):

a) in the vertical YZ plane parallel to spindle axis, E_{ZY};

b) in the vertical XY plane square to the spindle axis, E_{XY}.

Diagram

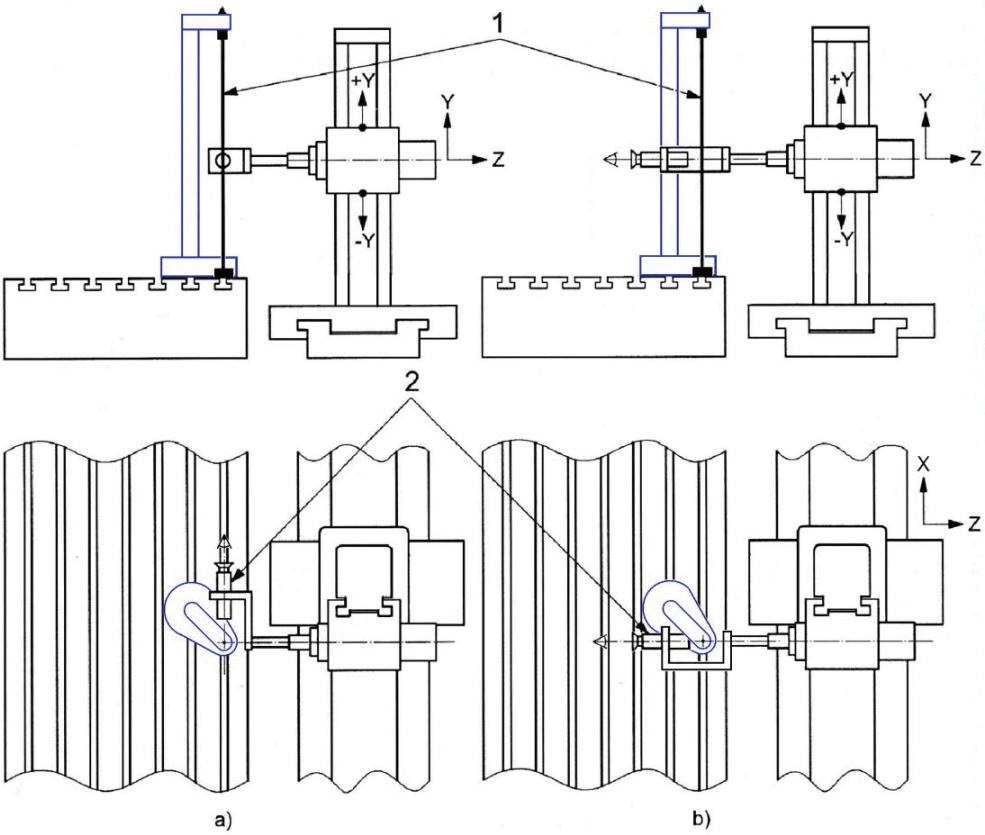

Key
1 taut wire
2 microscope

Tolerance

	for measuring lengths up to:				
	2 000	3 000	4 000	5 000	6 000
for a) and b):	0,03	0,04	0,05	0,07	0,09

For measuring lengths over 6 000, the tolerance shall be agreed upon between manufacturer/supplier and user.

Measured deviations

a)

b)

Measuring instruments

Microscope and taut wire or optical methods.

Observations and references to ISO 230-1:2012, 8.3, 8.2.2.2 or 8.2.2.3

The ram (Z-axis) shall be at mid travel with the spindle retracted.

The taut wire shall be tightened between the fixed table and another fixed part independent from the machine column.

If the spindle can be locked, the microscope or the target of the alignment telescope may be mounted on it. If the spindle cannot be locked, the microscope or the target shall be placed on the ram face.

Measurement location shall be reported.

© ISO 2016 – All rights reserved

Documents
Document Sharing Hub
Full document details: BS ISO 3070-2:2016