BS ISO 355:2019

BSI Standards Publication

Rolling bearings — Tapered roller bearings — Boundary dimensions and series designations

Documents
Document Sharing Hub

Full document details: BS ISO 355:2019

National foreword

This British Standard is the UK implementation of ISO 355:2019. It supersedes BS ISO 355:2007+A1:2012, which is withdrawn.

The UK participation in its preparation was entrusted to Technical Committee MCE/7, Rolling bearings.

A list of organizations represented on this committee can be obtained on request to its secretary.

This publication does not purport to include all the necessary provisions of a contract. Users are responsible for its correct application.

© The British Standards Institution 2019
Published by BSI Standards Limited 2019

ISBN 978 0 539 00196 9

ICS 21.100.20

Compliance with a British Standard cannot confer immunity from legal obligations.

This British Standard was published under the authority of the Standards Policy and Strategy Committee on 31 May 2019.

Amendments/corrigenda issued since publication

Date	Text affected

Documents
Document Sharing Hub

Full document details: BS ISO 355:2019

INTERNATIONAL STANDARD

ISO 355

Third edition
2019-05

Rolling bearings — Tapered roller bearings — Boundary dimensions and series designations

Roulements — Roulements à rouleaux coniques — Dimensions d'encombrement et désignation des séries

Reference number
ISO 355:2019(E)

Documents
Document Sharing Hub

© ISO 2019

Full document details: BS ISO 355:2019

COPYRIGHT PROTECTED DOCUMENT

© ISO 2019

All rights reserved. Unless otherwise specified, or required in the context of its implementation, no part of this publication may be reproduced or utilized otherwise in any form or by any means, electronic or mechanical, including photocopying, or posting on the internet or an intranet, without prior written permission. Permission can be requested from either ISO at the address below or ISO's member body in the country of the requester.

ISO copyright office
CP 401 • Ch. de Blandonnet 8
CH-1214 Vernier, Geneva
Phone: +41 22 749 01 11
Fax: +41 22 749 09 47
Email: copyright@iso.org
Website: www.iso.org

Published in Switzerland

© ISO 2019 – All rights reserved

Documents
Document Sharing Hub

Full document details: BS ISO 355:2019

Contents

Page

Foreword ..... **iv**
1 Scope **1**
2 Normative references **1**
3 Terms and definitions **1**
4 Symbols **1**
5 Series designations **4**
6 Boundary dimensions **5**
6.1 General 5
6.2 Single-row tapered roller bearings 5
6.3 Double-row or matched pair of tapered roller bearings 22
6.4 Single-row tapered roller bearings with flanged outer rings 30
Annex A (informative) **Flange dimensions for additional outer ring sizes** **39**
Bibliography **41**

© ISO 2019 – All rights reserved

Documents
Document Sharing Hub
Full document details: BS ISO 355:2019

Foreword

ISO (the International Organization for Standardization) is a worldwide federation of national standards bodies (ISO member bodies). The work of preparing International Standards is normally carried out through ISO technical committees. Each member body interested in a subject for which a technical committee has been established has the right to be represented on that committee. International organizations, governmental and non-governmental, in liaison with ISO, also take part in the work. ISO collaborates closely with the International Electrotechnical Commission (IEC) on all matters of electrotechnical standardization.

The procedures used to develop this document and those intended for its further maintenance are described in the ISO/IEC Directives, Part 1. In particular, the different approval criteria needed for the different types of ISO documents should be noted. This document was drafted in accordance with the editorial rules of the ISO/IEC Directives, Part 2 (see www.iso.org/directives).

Attention is drawn to the possibility that some of the elements of this document may be the subject of patent rights. ISO shall not be held responsible for identifying any or all such patent rights. Details of any patent rights identified during the development of the document will be in the Introduction and/or on the ISO list of patent declarations received (see www.iso.org/patents).

Any trade name used in this document is information given for the convenience of users and does not constitute an endorsement.

For an explanation of the voluntary nature of standards, the meaning of ISO specific terms and expressions related to conformity assessment, as well as information about ISO's adherence to the World Trade Organization (WTO) principles in the Technical Barriers to Trade (TBT) see www.iso.org/iso/foreword.html.

This document was prepared by Technical Committee ISO/TC 4, *Rolling bearings*, Subcommittee SC 9, *Tapered roller bearings*.

This third edition cancels and replaces the second edition (ISO 355:2007), which has been technically revised. It also incorporates the Amendment ISO 355:2007/Amd.1:2012. The main changes compared to the previous edition are as follows:

— Contact angle and smallest single chamfer dimension of the inner ring back face added to the double-row bearing tables.

— Tables with all dimensions added for bearings with flanged outer rings.

Any feedback or questions on this document should be directed to the user's national standards body. A complete listing of these bodies can be found at www.iso.org/members.html.

© ISO 2019 – All rights reserved
Documents
Document Sharing Hub
Full document details: BS ISO 355:2019

Rolling bearings — Tapered roller bearings — Boundary dimensions and series designations

1 Scope

This document specifies bearing and subunit boundary dimensions for complete single-row and double-row tapered roller bearings. It also specifies the flange dimensions of flanged outer rings for a selection of these bearings. A series designation for each bearing is also specified.

2 Normative references

The following documents are referred to in the text in such a way that some or all of their content constitutes requirements of this document. For dated references, only the edition cited applies. For undated references, the latest edition of the referenced document (including any amendments) applies.

ISO 492, *Rolling bearings — Radial bearings — Geometrical product specifications (GPS) and tolerance values*

ISO 582, *Rolling bearings — Chamfer dimensions — Maximum values*

ISO 1132-1, *Rolling bearings — Tolerances — Part 1: Terms and definitions*

ISO 5593, *Rolling bearings — Vocabulary*

ISO 15241, *Rolling bearings — Symbols for physical quantities*

3 Terms and definitions

For the purposes of this document, the terms and definitions given in ISO 1132-1 and ISO 5593 apply.

ISO and IEC maintain terminological databases for use in standardization at the following addresses:

— ISO Online browsing platform: available at https://www.iso.org/obp

— IEC Electropedia: available at http://www.electropedia.org/

4 Symbols

For the purposes of this document, the symbols given in ISO 15241 and the following apply.

The symbols shown in Figures 1 to 4 and the values given in Tables 4 to 16 denote nominal dimensions unless specified otherwise.

B inner ring width, single-row bearing

B_1 overall width of inner rings of double-row tapered roller bearing or matched pair of tapered roller bearings with spacer

C outer ring width, single-row bearing

C_1 width of outer ring flange

C_2 width of double outer ring, or overall width of outer rings of matched pair of tapered roller bearings with spacers

© ISO 2019 – All rights reserved

Documents
Document Sharing Hub
Full document details: BS ISO 355:2019

D	outside diameter of outer ring
D_1	outside diameter of outer ring flange
d	bore diameter of inner ring
E	inside diameter of outer ring back face
h_1	height of outer ring flange
r	chamfer dimension of inner ring back face
$r_{s\,min}$	smallest single chamfer dimension of inner ring back face
r_1	chamfer dimension of outer ring back face
$r_{1s\,min}$	smallest single chamfer dimension of outer ring back face
r_2	chamfer dimension of inner ring and outer ring front face
T	bearing width, single-row bearing
α	contact angle

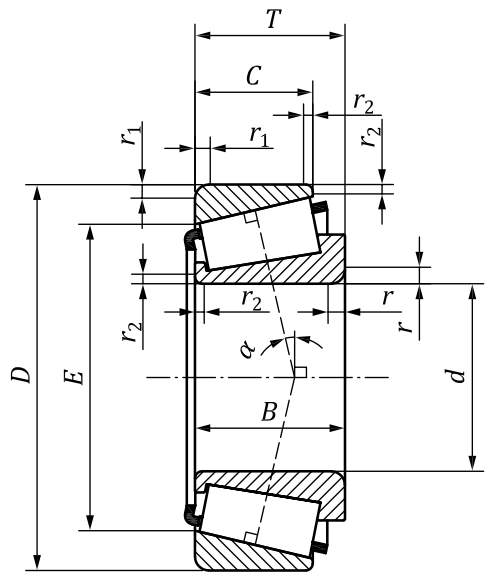

NOTE In the case of tapered roller bearings, the contact angle is the same as the half included outer ring raceway angle.

Figure 1 — Single-row tapered roller bearing

© ISO 2019 – All rights reserved
Documents
Document Sharing Hub
Full document details: BS ISO 355:2019

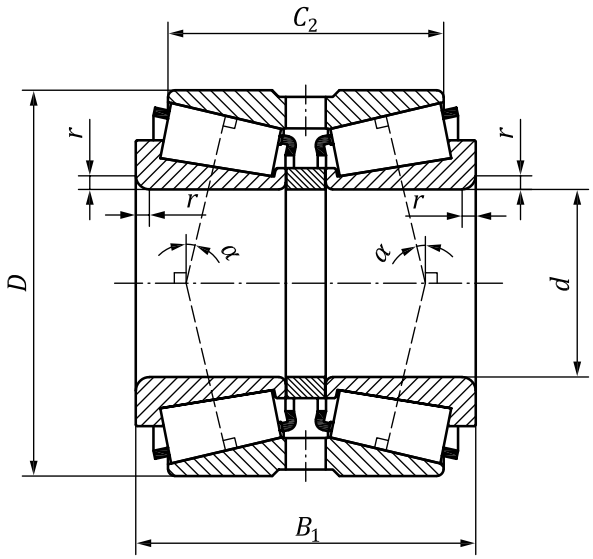

NOTE The double-row bearing outer ring can have a lubrication groove and holes.

Figure 2 — Double-row tapered roller bearing with double raceway outer ring

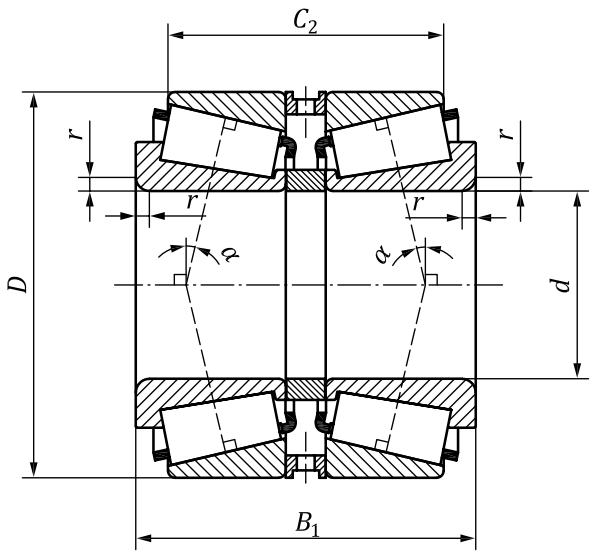

NOTE The outer spacer can have a lubrication groove and holes.

Figure 3 — Matched pair of tapered roller bearings in back-to-back arrangement with spacers

© ISO 2019 – All rights reserved

Documents
Document Sharing Hub
Full document details: BS ISO 355:2019

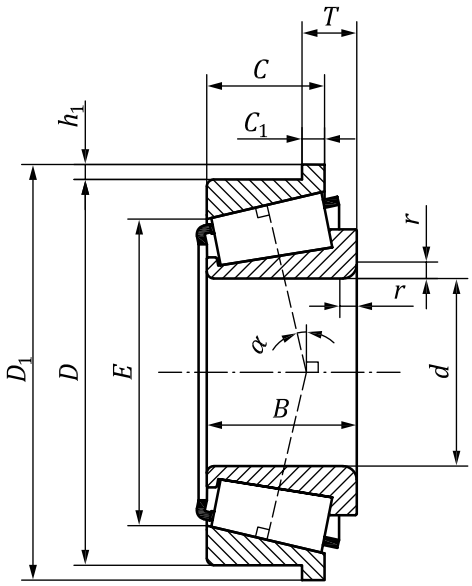

Figure 4 — Single-row tapered roller bearing with flanged outer ring

5 Series designations

Each bearing whose dimensions are given in this document is referred to a dimension series. The dimension series is designated by a combination of three symbols, for example 2AC. The dimension series designation can be used to build a tapered roller bearing designation according to ISO 10317[1].

The first symbol is a numeric character, which represents a range of contact angles (contact angle series).

The second symbol is an alphabetic character, which represents a range of numeric values for the outside diameter to bore relationship (diameter series).

The third symbol is an alphabetic character, which represents a range of numeric values for the width to height relationship of a single-row bearing (width series).

The designations for the standardized bearings generally conform with the angle ranges and the numeric values for the relationships given in Tables 1 to 3. In some cases, an exception has been made to avoid the condition that the same designation be used for two different bearings with the same bore diameter.

The series designations shown in this clause shall not be applied to bearings other than those specified in Clause 6.

Table 1 — Designation of contact angle series

Designation of contact angle series	α	
	>	≤
1	Reserved for future use	
2	10°	13° 52'
3	13° 52'	15° 59'
4	15° 59'	18° 55'
5	18° 55'	23°
6	23°	27°
7	27°	30°

© ISO 2019 – All rights reserved
Documents
Document Sharing Hub
Full document details: BS ISO 355:2019

Table 2 — Designation of diameter series

Designation of diameter series	$\frac{D}{d^{0,77}}$	
	>	≤
A	Reserved for future use	
B	3,4	3,8
C	3,8	4,4
D	4,4	4,7
E	4,7	5
F	5	5,6
G	5,6	7

Table 3 — Designation of width series

Designation of width series	$\frac{T}{(D-d)^{0,95}}$	
	>	≤
A	Reserved for future use	
B	0,5	0,68
C	0,68	0,8
D	0,8	0,88
E	0,88	1

6 Boundary dimensions

6.1 General

The bearing and subunit boundary dimensions given in Tables 4 to 16 are grouped by contact angle series and then listed in ascending order of bore, outside diameter and bearing width. Tolerances for the dimensions shall be as given in ISO 492. Maximum chamfer dimensions shall be in accordance with ISO 582.

In this document, no values are given for the inner ring and outer ring front face chamfer dimension, r_2. However, the front face corners shall not be sharp.

6.2 Single-row tapered roller bearings

Boundary dimensions for contact angle series 2, 3, 4, 5 and 7 are given in Tables 4, 5, 6, 7 and 8 respectively.

© ISO 2019 – All rights reserved

Documents
Document Sharing Hub
Full document details: BS ISO 355:2019

Table 4 — Contact angle series 2

Dimensions in millimetres

d	D	T	B	$r_{s\,min}$[a]	C	$r_{1s\,min}$[a]	α	E	**Dimension series**
15	42	14,25	13	1	11	1	10° 45' 29''	33,272	2FB
17	40	13,25	12	1	11	1	12° 57' 10''	31,408	2DB
17	40	17,25	16	1	14	1	11° 45'	31,17	2DD
17	47	15,25	14	1	12	1	10° 45' 29''	37,42	2FB
17	47	20,25	19	1	16	1	10° 45' 29''	36,09	2FD
20	37	12	12	0,3	9	0,3	12°	29,621	2BD
20	45	17	17,5	1	13,5	1	12°	35,815	2DC
20	47	15,25	14	1	12	1	12° 57' 10''	37,304	2DB
20	47	19,25	18	1	15	1	12° 28'	35,81	2DD
20	50	22	22	2	18,5	1,5	12° 30'	38,063	2ED
20	52	16,25	15	1,5	13	1,5	11° 18' 36''	41,318	2FB
20	52	22,25	21	1,5	18	1,5	11° 18' 36''	39,518	2FD
22	40	12	12	0,3	9	0,3	12°	32,665	2BC
22	47	17	17,5	1	13,5	1	12° 35'	37,542	2CC
22	52	22	22	2	18,5	1,5	12° 14'	40,548	2ED
25	42	12	12	0,3	9	0,3	12°	34,608	2BD
25	47	17	17	0,6	14	0,6	10° 55'	38,278	2CE
25	50	17	17,5	1,5	13,5	1	13° 30'	40,205	2CC
25	52	19,25	18	1	16	1	13° 30'	41,331	2CD
25	52	22	22	1	18	1	13° 10'	40,441	2DE[b]
25	58	26	26	2	21	1,5	12° 30'	44,805	2EE
25	62	18,25	17	1,5	15	1,5	11° 18' 36''	50,637	2FB
25	62	25,25	24	1,5	20	1,5	11° 18' 36''	48,637	2FD
28	45	12	12	0,3	9	0,3	12°	37,639	2BD
28	55	19	19,5	1,5	15,5	1,5	12° 10'	44,888	2CD
28	58	24	24	1	19	1	12° 45'	45,846	2DE
28	65	27	27	2	22	2	12° 45'	50,33	2ED
30	47	12	12	0,3	9	0,3	12°	39,617	2BD
30	55	20	20	1	16	1	11°	45,283	2CE
30	58	19	19,5	1,5	15,5	1,5	12° 50'	47,309	2CD
30	62	25	25	1	19,5	1	12° 50'	49,524	2DE
30	68	29	29	2	24	2	12° 28'	52,696	2EE
30	72	20,75	19	1,5	16	1,5	11° 51' 35''	58,287	2FB
30	72	28,75	27	1,5	23	1,5	11° 51' 35''	55,767	2FD

[a] Maximum chamfer dimensions are given in ISO 582.

[b] Dimension series deviates from the rules in Clause 5.

© ISO 2019 – All rights reserved

Documents
Document Sharing Hub

Full document details: BS ISO 355:2019

Table 4 *(continued)*

d	D	T	B	$r_{s\,min}$[a]	C	$r_{1s\,min}$[a]	α	E	Dimension series
32	52	14	15	0,6	10	0,6	12°	44,261	2BD
32	62	21	21	1,5	17	1,5	12° 30'	50,554	2CD
32	65	26	26	1	20,5	1	13°	51,791	2DE
32	72	29	29	2	24	2	12° 41' 30''	56,151	2ED
35	55	14	14	0,6	11,5	0,6	11°	47,22	2BD
35	62	21	21	1	17	1	11° 30'	51,32	2CE
35	68	23	23	2	18,5	2	12° 35'	55,4	2DD
35	72	28	28	1,5	22	1,5	13° 15'	57,186	2DE
35	78	33	32,5	2,5	27	2	12° 12'	61,925	2EE[b]
35	80	22,75	21	2	18	1,5	11° 51' 35''	65,769	2FB
35	80	32,75	31	2	25	1,5	11° 51' 35''	62,829	2FE
40	62	15	15	0,6	12	0,6	10° 55'	53,388	2BC
40	68	22	22	1	18	1	10° 40'	57,29	2BE[b]
40	75	24	24	2	19,5	2	12° 07'	62,155	2CD
40	75	26	26	1,5	20,5	1,5	13° 20'	61,169	2CE
40	80	32	32	1,5	25	1,5	13° 25'	63,405	2DE
40	85	33	32,5	2,5	28	2	12° 55'	66,612	2EE
40	90	25,25	23	2	20	1,5	12° 57' 10''	72,703	2FB
40	90	35,25	33	2	27	1,5	12° 57' 10''	69,253	2FD
45	68	15	15	0,6	12	0,6	12°	58,852	2BC
45	75	24	24	1	19	1	11° 05'	63,116	2CE
45	80	24	24	2	19,5	2	13°	66,615	2CD
45	95	36	35	2,5	30	2,5	12° 09'	75,712	2ED[b]
45	100	27,25	25	2	22	1,5	12° 57' 10''	81,78	2FB
45	100	38,25	36	2	30	1,5	12° 57' 10''	78,33	2FD
50	72	15	15	0,6	12	0,6	12° 50'	62,748	2BC
50	80	24	24	1	19	1	11° 55'	67,775	2CE
50	82	21,5	21,5	3	17	0,5	11° 30'	70,594	2CC
50	85	24	24	2	19,5	2	13° 52'	70,969	2CD
50	90	28	28	3	23	2,5	12° 22'	74,538	2DD
50	100	36	35	2,5	30	2,5	12° 51'	79,996	2ED
50	110	29,25	27	2,5	23	2	12° 57' 10''	90,633	2FB
50	110	42,25	40	2,5	33	2	12° 57' 10''	86,263	2FD
55	80	17	17	1	14	1	11° 39'	69,503	2BC
55	85	18	18,5	2	14	2	12° 49'	73,586	2CC

[a] Maximum chamfer dimensions are given in ISO 582.

[b] Dimension series deviates from the rules in Clause 5.

© ISO 2019 – All rights reserved

Documents
Document Sharing Hub
Full document details: BS ISO 355:2019

Table 4 *(continued)*

d	D	T	B	$r_{s\,min}$[a]	C	$r_{1s\,min}$[a]	α	E	Dimension series
55	90	27	27	1,5	21	1,5	11° 45'	76,656	2CE
55	95	27	27	2	21,5	2	12° 43' 30''	80,106	2CD
55	95	29	29	1,5	23,5	2,5	12° 35'	79,593	2DD[b]
55	110	39	39	2,5	32	2,5	13°	88,446	2ED[b]
55	120	31,5	29	2,5	25	2	12° 57' 10''	99,146	2FB
55	120	45,5	43	2,5	35	2	12° 57' 10''	94,316	2FD
60	85	17	17	1	14	1	12° 27'	74,185	2BC
60	90	18	18,5	2	14	2	13° 38' 30''	78,249	2CC
60	95	27	27	1,5	21	1,5	12° 20'	80,422	2CE
60	100	27	27	2	21,5	2	13° 27'	84,587	2CD
60	115	40	39	2,5	33	2,5	12° 30'	93,46	2EE
60	130	33,5	31	3	26	2,5	12° 57' 10''	107,769	2FB
60	130	48,5	46	3	37	2,5	12° 57' 10''	102,939	2FD
65	90	17	17	1	14	1	13° 15'	78,849	2BC
65	100	22	22	2	17,5	2	12° 10' 30''	87,433	2CC
65	100	27	27	1,5	21	1,5	13° 05'	85,257	2CE
65	110	31	31	2	25	2	12° 27'	93,09	2DD
65	120	39	38,5	3	32	2,5	12° 40'	98,572	2ED
65	125	43	42	2,5	35	2,5	12°	102,378	2FD
65	140	36	33	3	28	2,5	12° 57' 10''	116,846	2GB
65	140	51	48	3	39	2,5	12° 57' 10''	111,786	2GD
70	100	20	20	1	16	1	11° 53'	88,59	2BC
70	105	22	22	2	17,5	2	12° 49' 30''	92,004	2CC
70	110	31	31	1,5	25,5	1,5	10° 45'	95,021	2CE
70	120	34	33	2	27	2	12° 22'	101,343	2DD
70	130	43	42	3	35	2,5	12° 31' 30''	106,766	2ED
70	150	38	35	3	30	2,5	12° 57' 10''	125,244	2GB
70	150	54	51	3	42	2,5	12° 57' 10''	119,724	2GD
75	105	20	20	1	16	1	12° 31'	93,223	2BC
75	115	25	25	2	20	2	12°	100,414	2CC
75	115	31	31	1,5	25,5	1,5	11° 15'	99,4	2CE
75	125	34	33	2,5	27	2	12° 55'	105,786	2DD
75	135	43	42	3	35	2,5	13° 03'	111,153	2ED
75	145	51	51	3	42	2,5	13° 34'	117,744	2FE
75	160	40	37	3	31	2,5	12° 57' 10''	134,097	2GB
75	160	58	55	3	45	2,5	12° 57' 10''	127,887	2GD

[a] Maximum chamfer dimensions are given in ISO 582.

[b] Dimension series deviates from the rules in Clause 5.

© ISO 2019 – All rights reserved

Documents
Document Sharing Hub

Full document details: BS ISO 355:2019

Table 4 *(continued)*

d	D	T	B	$r_{s\,min}$[a]	C	$r_{1s\,min}$[a]	α	E	Dimension series
80	110	20	20	1	16	1	13° 10'	97,974	2BC
80	120	25	25	2	20	2	12° 33' 30''	105,003	2CC
80	125	36	36	1,5	29,5	1,5	10° 30'	107,75	2CE
80	130	34	33	2,5	27	2	13° 30'	110,475	2DD
80	145	46	45	3	38	2,5	12° 02'	120,366	2ED
80	170	42,5	39	3	33	2,5	12° 57' 10''	143,174	2GB
80	170	61,5	58	3	48	2,5	12° 57' 10''	136,504	2GD
85	120	23	23	1,5	18	1,5	12° 18'	106,599	2BC[b]
85	125	25	25	2,5	20	2	13° 07' 30''	109,65	2CC
85	130	36	36	1,5	29,5	1,5	11°	112,838	2CE
85	135	34	33	2,5	28	2	13° 02'	115,904	2DD
85	150	46	46	3	38	3	12° 30'	124,965	2ED
85	180	44,5	41	4	34	3	12° 57' 10''	150,433	2GB
85	180	63,5	60	4	49	3	12° 57' 10''	144,223	2GD
90	125	23	23	1,5	18	1,5	12° 51'	111,282	2BC[b]
90	135	28	27,5	2,5	23	2	12° 01' 30''	119,139	2CC
90	140	34	33	2,5	28	2,5	12° 02' 30''	121,86	2CD
90	140	39	39	2	32,5	1,5	10° 10'	122,363	2CE
90	155	44	44	3	35,5	2,5	12° 48' 40''	130,944	2EC[b]
90	155	46	46	3	38	3	12° 17'	130,206	2ED
90	165	47	46	3	39	3	12°	140,251	2FC
90	190	46,5	43	4	36	3	12° 57' 10''	159,061	2GB
90	190	57,15	57,531	8	46,038	3,3	12° 35'	157,96	2GC
90	190	67,5	64	4	53	3	12° 57' 10''	151,701	2GD
95	130	23	23	1,5	18	1,5	13° 25'	116,082	2BC[b]
95	140	28	27,5	2,5	23	2,5	12° 30'	123,797	2CC
95	145	34	33	2,5	28	2,5	12° 30'	126,419	2CD
95	145	39	39	2	32,5	1,5	10° 30'	126,346	2CE
95	160	46	46	3	38	3	12° 43'	134,711	2ED
95	200	49,5	45	4	38	3	12° 57' 10''	165,861	2GB
95	200	71,5	67	4	55	3	12° 57' 10''	160,318	2GD
100	140	25	25	1,5	20	1,5	12° 23'	125,717	2CC
100	145	28	27,5	2,5	23	2,5	12° 58' 30''	128,448	2DC[b]
100	150	34	33	2,5	28	2,5	12° 57' 30''	130,992	2CD
100	150	39	39	2	32,5	1,5	10° 50'	130,323	2CE
100	165	47	46	3	39	3	12°	140,251	2EE
100	215	51,5	47	4	39	3	12° 57' 10''	178,578	2GB

[a] Maximum chamfer dimensions are given in ISO 582.

[b] Dimension series deviates from the rules in Clause 5.

AVA Documents
Document Sharing Hub

© ISO 2019 – All rights reserved

Full document details: BS ISO 355:2019