BS ISO 3560:2013

BSI Standards Publication

Road vehicles — Frontal fixed barrier or pole impact test procedure

bsi.

...making excellence a habit.™

Document Sharing Hub

Full document details: BS ISO 3560:2013

National foreword

This British Standard is the UK implementation of ISO 3560:2013.

The UK participation in its preparation was entrusted to Technical Committee AUE/15, Safety related to vehicles.

A list of organizations represented on this committee can be obtained on request to its secretary.

This publication does not purport to include all the necessary provisions of a contract. Users are responsible for its correct application.

© The British Standards Institution 2013. Published by BSI Standards Limited 2013

ISBN 978 0 580 70152 8

ICS 43.020

Compliance with a British Standard cannot confer immunity from legal obligations.

This British Standard was published under the authority of the Standards Policy and Strategy Committee on 31 July 2013.

Amendments issued since publication

Date	Text affected

Documents
Document Sharing Hub

Full document details: BS ISO 3560:2013

INTERNATIONAL STANDARD

ISO 3560

Third edition
2013-06-15

Road vehicles — Frontal fixed barrier or pole impact test procedure

Véhicules routiers — Procédure d'essai de choc frontal contre barrière fixe ou poteau

Reference number
ISO 3560:2013(E)

Documents
Document Sharing Hub

© ISO 2013

Full document details: BS ISO 3560:2013

COPYRIGHT PROTECTED DOCUMENT

© ISO 2013

All rights reserved. Unless otherwise specified, no part of this publication may be reproduced or utilized otherwise in any form or by any means, electronic or mechanical, including photocopying, or posting on the internet or an intranet, without prior written permission. Permission can be requested from either ISO at the address below or ISO's member body in the country of the requester.

ISO copyright office
Case postale 56 • CH-1211 Geneva 20
Tel. + 41 22 749 01 11
Fax + 41 22 749 09 47
E-mail copyright@iso.org
Web www.iso.org

Published in Switzerland

© ISO 2013 – All rights reserved

Documents
Document Sharing Hub

Full document details: BS ISO 3560:2013

Contents

Page

Foreword ..... **iv**

1 Scope **1**

2 Normative references **1**

3 Terms and definitions **1**

4 Impact test set-up **4**
4.1 Test site 4
4.2 Barrier 4
4.3 Pole 6
4.4 Test conditions 6

5 Test vehicle **7**
5.1 General state and equipment 7
5.2 Mass of the test vehicle 7
5.3 Passenger compartment adjustments 8

6 Test dummy **9**
6.1 Type 9
6.2 Clothing and shoes 10
6.3 Temperature 10

7 Test dummy installation **10**
7.1 General 10
7.2 Head 10
7.3 Torso 10
7.4 H-point of test dummy 11
7.5 Pelvic angle 11
7.6 Thighs and legs 11
7.7 Arms 11
7.8 Hands 12
7.9 Feet 12

8 Impact response measurements **12**

9 Instrumentation **13**

Bibliography **14**

© ISO 2013 – All rights reserved

Documents
Document Sharing Hub
Full document details: BS ISO 3560:2013

Foreword

ISO (the International Organization for Standardization) is a worldwide federation of national standards bodies (ISO member bodies). The work of preparing International Standards is normally carried out through ISO technical committees. Each member body interested in a subject for which a technical committee has been established has the right to be represented on that committee. International organizations, governmental and non-governmental, in liaison with ISO, also take part in the work. ISO collaborates closely with the International Electrotechnical Commission (IEC) on all matters of electrotechnical standardization.

International Standards are drafted in accordance with the rules given in the ISO/IEC Directives, Part 2.

The main task of technical committees is to prepare International Standards. Draft International Standards adopted by the technical committees are circulated to the member bodies for voting. Publication as an International Standard requires approval by at least 75 % of the member bodies casting a vote.

Attention is drawn to the possibility that some of the elements of this document may be the subject of patent rights. ISO shall not be held responsible for identifying any or all such patent rights.

ISO 3560 was prepared by Technical Committee ISO/TC 22, *Road vehicles*, Subcommittee SC 10, *Impact test procedures*.

This third edition cancels and replaces the second edition (3560:2001), which has been technically revised.

© ISO 2013 – All rights reserved
Documents
Document Sharing Hub
Full document details: BS ISO 3560:2013

INTERNATIONAL STANDARD ISO 3560:2013(E)

Road vehicles — Frontal fixed barrier or pole impact test procedure

1 Scope

This International Standard specifies a general frontal test procedure for impact on fixed barrier or pole. There are several applicable test configurations, some with specific test procedures. This International Standard describes general testing requirements for conducting accurate and uniform frontal testing.

2 Normative references

The following documents, in whole or in part, are normatively referenced in this document and are indispensable for its application. For dated references, only the edition cited applies. For undated references, the latest edition of the referenced document (including any amendments) applies.

ISO 612, *Road vehicles — Dimensions of motor vehicles and towed vehicles — Terms and definitions*

ISO 1176:1990, *Road vehicles — Masses — Vocabulary and codes*

ISO 3784, *Road vehicles — Measurement of impact velocity in collision tests*

ISO 6487, *Road vehicles — Measurement techniques in impact tests — Instrumentation*

ISO 6549[1)], *Road vehicles — Procedure for H- and R-point determination*

FMVSS 208:1997, *Actions to Reduce the Adverse Effects of Air Bags*

3 Terms and definitions

For the purposes of this document, the terms and definitions given in ISO 612 and the following apply.

3.1
impact angle
angle between the longitudinal median plane (of the vehicle) and a vertical plane perpendicular to the contact plane of the barrier face

Note 1 to entry: The longitudinal median plane (of the vehicle) is also called the longitudinal plane of symmetry or zero Y plane (see ISO 4130).

3.2
vehicle width
W
distance between two planes parallel to the longitudinal median plane (of the vehicle) and touching the vehicle on either side of the longitudinal median plane

Note 1 to entry: All parts of the vehicle, including any lateral projections of fixed parts (wheels, hubs, door-handles, bumpers, etc.) are contained between these two planes, except for the rear-view mirrors, side marker lamps, tyre pressure indicators, direction indicator lamps, position lights, customs seals, flexible mud-guards, door-edge guards, hinged side windows in the open position, fuel filler flaps in the open position, retractable steps, snow chains and the deflected part of the tyre walls immediately above the point of contact with the ground.

1) Withdrawn.

© ISO 2013 – All rights reserved

Documents
Document Sharing Hub
Full document details: BS ISO 3560:2013

3.3
overlap
percentage of the vehicle width covered by the barrier face (see Figure 1)

Note 1 to entry: The overlap may be left or right. Figure 1 shows a left side overlap.

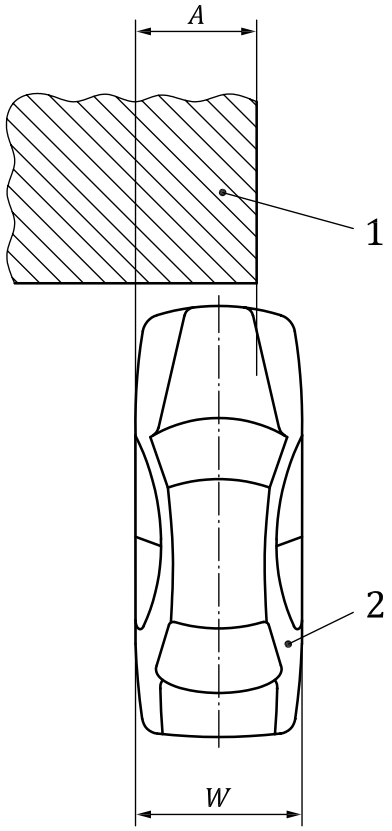

Key
1 Barrier
2 Vehicle

$$\text{Overlap} = \frac{A}{W} \times 100$$

Figure 1 — Overlap

3.4
offset
B
perpendicular distance between the longitudinal median plane (of the vehicle) and the centreline of the pole

Note 1 to entry: The offset may be left or right. Figure 2 shows a left side offset.

© ISO 2013 – All rights reserved
Documents
Document Sharing Hub
Full document details: BS ISO 3560:2013