BS ISO 37:2024

BSI Standards Publication

Rubber, vulcanized or thermoplastic — Determination of tensile stress-strain properties

Documents
Document Sharing Hub

Full document details: BS ISO 37:2024

National foreword

This British Standard is the UK implementation of ISO 37:2024. It supersedes BS ISO 37:2017, which is withdrawn.

The UK participation in its preparation was entrusted to Technical Committee PRI/22, Testing and analysis of rubber.

A list of organizations represented on this committee can be obtained on request to its committee manager.

Contractual and legal considerations

This publication has been prepared in good faith, however no representation, warranty, assurance or undertaking (express or implied) is or will be made, and no responsibility or liability is or will be accepted by BSI in relation to the adequacy, accuracy, completeness or reasonableness of this publication. All and any such responsibility and liability is expressly disclaimed to the full extent permitted by the law.

This publication is provided as is, and is to be used at the recipient's own risk.

The recipient is advised to consider seeking professional guidance with respect to its use of this publication.

This publication is not intended to constitute a contract. Users are responsible for its correct application.

© The British Standards Institution 2024
Published by BSI Standards Limited 2024

ISBN 978 0 539 27054 9

ICS 83.060

Compliance with a British Standard cannot confer immunity from legal obligations.

This British Standard was published under the authority of the Standards Policy and Strategy Committee on 31 May 2024.

Amendments/corrigenda issued since publication

Date	Text affected

Documents
Document Sharing Hub

Full document details: BS ISO 37:2024

International Standard

ISO 37

Seventh edition
2024-05

Rubber, vulcanized or thermoplastic — Determination of tensile stress-strain properties

Caoutchouc vulcanisé ou thermoplastique — Détermination des caractéristiques de contrainte-déformation en traction

Reference number
ISO 37:2024(en)

© ISO 2024

Documents
Document Sharing Hub

Full document details: BS ISO 37:2024

COPYRIGHT PROTECTED DOCUMENT

© ISO 2024

All rights reserved. Unless otherwise specified, or required in the context of its implementation, no part of this publication may be reproduced or utilized otherwise in any form or by any means, electronic or mechanical, including photocopying, or posting on the internet or an intranet, without prior written permission. Permission can be requested from either ISO at the address below or ISO's member body in the country of the requester.

ISO copyright office
CP 401 • Ch. de Blandonnet 8
CH-1214 Vernier, Geneva
Phone: +41 22 749 01 11
Email: copyright@iso.org
Website: www.iso.org

Published in Switzerland

Documents
Document Sharing Hub
Full document details: BS ISO 37:2024

Contents

Page

Foreword ... **v**
1 Scope ... **1**
2 Normative references ... **1**
3 Terms, definitions and abbreviated terms ... **1**
4 Principle ... **4**
5 General ... **4**
6 Test pieces ... **4**
6.1 General ... 4
6.2 Dumbbells ... 5
6.3 Rings ... 5
7 Apparatus ... **6**
7.1 Dies and cutters ... 6
7.2 Thickness gauge ... 6
7.3 Cone gauge ... 6
7.4 Tensile-testing machine ... 7
7.5 Test rig for ring test pieces ... 8
8 Calibration ... **9**
9 Number of test pieces ... **9**
10 Preparation of test pieces ... **9**
10.1 Dumbbells ... 9
10.2 Rings ... 9
11 Conditioning of sample and test pieces ... **10**
11.1 Time between vulcanization and testing ... 10
11.2 Protection of samples and test pieces ... 10
11.3 Conditioning of samples ... 10
11.4 Conditioning of test pieces ... 10
12 Marking of dumbbell test pieces ... **10**
13 Measurement of test pieces ... **10**
13.1 Dumbbells ... 10
13.2 Rings ... 11
13.3 Comparison of groups of test pieces ... 11
14 Procedure ... **11**
14.1 Dumbbell test pieces ... 11
14.2 Ring test pieces ... 11
15 Temperature of test ... **12**
16 Calculation of results ... **12**
16.1 Dumbbells ... 12
16.2 Ring test pieces ... 14
17 Expression of results ... **15**
18 Precision ... **15**
19 Test report ... **15**
Annex A (informative) **Preparation of type B ring test pieces** ... **17**
Annex B (informative) **Precision** ... **20**
Annex C (informative) **Analysis of ITP data and dumbbell shape** ... **26**
Annex D (normative) **Calibration schedule** ... **30**

© ISO 2024 – All rights reserved

Documents
Document Sharing Hub
Full document details: BS ISO 37:2024

Bibliography **32**

© ISO 2024 – All rights reserved

Documents
Document Sharing Hub
Full document details: BS ISO 37:2024

Foreword

ISO (the International Organization for Standardization) is a worldwide federation of national standards bodies (ISO member bodies). The work of preparing International Standards is normally carried out through ISO technical committees. Each member body interested in a subject for which a technical committee has been established has the right to be represented on that committee. International organizations, governmental and non-governmental, in liaison with ISO, also take part in the work. ISO collaborates closely with the International Electrotechnical Commission (IEC) on all matters of electrotechnical standardization.

The procedures used to develop this document and those intended for its further maintenance are described in the ISO/IEC Directives, Part 1. In particular, the different approval criteria needed for the different types of ISO document should be noted. This document was drafted in accordance with the editorial rules of the ISO/IEC Directives, Part 2 (see www.iso.org/directives).

ISO draws attention to the possibility that the implementation of this document may involve the use of (a) patent(s). ISO takes no position concerning the evidence, validity or applicability of any claimed patent rights in respect thereof. As of the date of publication of this document, ISO had not received notice of (a) patent(s) which may be required to implement this document. However, implementers are cautioned that this may not represent the latest information, which may be obtained from the patent database available at www.iso.org/patents. ISO shall not be held responsible for identifying any or all such patent rights.

Any trade name used in this document is information given for the convenience of users and does not constitute an endorsement.

For an explanation of the voluntary nature of standards, the meaning of ISO specific terms and expressions related to conformity assessment, as well as information about ISO's adherence to the World Trade Organization (WTO) principles in the Technical Barriers to Trade (TBT), see www.iso.org/iso/foreword.html.

This document was prepared by Technical Committee ISO/TC 45, *Rubber and rubber products*, Subcommittee SC 2, *Testing and analysis*.

This seventh edition cancels and replaces the sixth edition (ISO 37:2017), which has been technically revised.

The main changes are as follows:

— a calibration schedule has been added;

— corrections made to black designations;

— symbols changed to comply with the ISO/IEC Directives part 2.

Any feedback or questions on this document should be directed to the user's national standards body. A complete listing of these bodies can be found at www.iso.org/members.html.

© ISO 2024 – All rights reserved

Documents
Document Sharing Hub
Full document details: BS ISO 37:2024

Documents
Document Sharing Hub

Rubber, vulcanized or thermoplastic — Determination of tensile stress-strain properties

WARNING 1 — Persons using this document should be familiar with normal laboratory practice. This document does not purport to address all of the safety problems, if any, associated with its use. It is the responsibility of the user to establish appropriate safety and health practices.

WARNING 2 — Certain procedures specified in this document might involve the use or generation of substances, or the generation of waste, that could constitute a local environmental hazard. Reference should be made to appropriate documentation on safe handling and disposal after use.

1 Scope

This document specifies a method for the determination of the tensile stress-strain properties of vulcanized and thermoplastic rubbers.

The properties which can be determined are tensile strength, elongation at break, stress at a given elongation, elongation at a given stress, stress at yield and elongation at yield. The measurement of stress and strain at yield applies only to some thermoplastic rubbers and certain other compounds.

2 Normative references

The following documents are referred to in the text in such a way that some or all of their content constitutes requirements of this document. For dated references, only the edition cited applies. For undated references, the latest edition of the referenced document (including any amendments) applies.

ISO 5893, *Rubber and plastics test equipment — Tensile, flexural and compression types (constant rate of traverse) — Specification*

ISO 18899, *Guide to the calibration of test equipment*

ISO 23529:2016, *Rubber — General procedures for preparing and conditioning test pieces for physical test methods*

3 Terms, definitions and abbreviated terms

For the purposes of this document, the following terms and definitions apply.

ISO and IEC maintain terminological databases for use in standardization at the following addresses:

— IEC Electropedia: available at https://www.electropedia.org/

— ISO Online browsing platform: available at https://www.iso.org/obp

3.1
tensile stress
S
stress applied so as to extend the test piece

Note 1 to entry: It is calculated as the applied force per unit area of the original cross-section of the test length.

3.2
elongation
E
tensile strain, expressed as a percentage of the test length, produced in the test piece by a *tensile stress* (3.1)

© ISO 2024 – All rights reserved

Documents
Document Sharing Hub
Full document details: BS ISO 37:2024

3.3
tensile strength
S_{max}
maximum *tensile stress* (3.1) recorded in extending the test piece to breaking point

Note 1 to entry: See Figure 1.

3.4
tensile strength at break
S_b
tensile stress (3.1) recorded at the moment of rupture

Note 1 to entry: See Figure 1.

Note 2 to entry: The values of S_{max} and S_b might be different if, after yield at S_y, the *elongation* (3.2) continues and is accompanied by a drop in stress, resulting in S_b being lower than S_{max} [see Figure 1 c)].

3.5
elongation at break
E_b
tensile strain in the test length at breaking point

Note 1 to entry: See Figure 1.

3.6
elongation at a given stress
E_S
tensile strain in the test length when the test piece is subjected to a given *tensile stress* (3.1)

3.7
stress at a given elongation
S_E
tensile stress (3.1) in the test length required to produce a given *elongation* (3.2)

Note 1 to entry: In the rubber industry, this definition is widely identified with the term “modulus” and care should be taken to avoid confusion with the other use of “modulus” to denote the slope of the stress-strain curve at a given elongation.

3.8
tensile stress at yield
S_y
tensile stress (3.1) at the first point on the stress-strain curve where some further increase in strain occurs without any increase in stress

Note 1 to entry: This might correspond either to a point of inflection [see Figure 1 b)] or to a maximum [see Figure 1 c)].

3.9
elongation at yield
E_y
tensile strain at the first point on the stress-strain curve where some further increase in strain is not accompanied by an increase in stress

Note 1 to entry: See Figure 1.

© ISO 2024 – All rights reserved

Documents
Document Sharing Hub
Full document details: BS ISO 37:2024

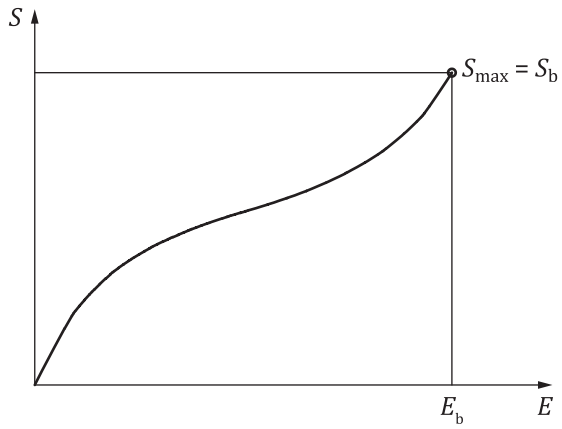

a)

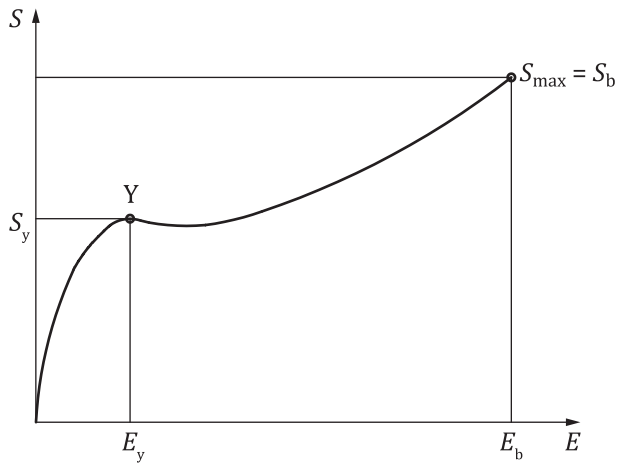

b)

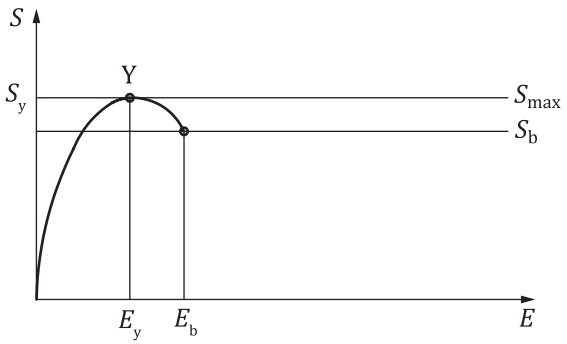

c)

Key

E	elongation	S_y	stress at yield
E_b	elongation at break	S_{max}	tensile strength
E_y	elongation at yield	S_b	tensile strength at break
S	stress	Y	yield point

Figure 1 — Illustration of tensile terms

© ISO 2024 – All rights reserved

Documents
Document Sharing Hub
Full document details: BS ISO 37:2024

3.10
test length
initial distance between reference points within the length of the narrow portion of a dumbbell test piece used to measure *elongation* (3.2)

Note 1 to entry: See Figure 2.

4 Principle

Standard test pieces, either dumbbells or rings, are stretched in a tensile-testing machine at a constant rate of traverse of the driven grip or pulley. Readings of force and elongation are taken as required during the uninterrupted stretching of the test piece and when it breaks.

5 General

Dumbbell and ring test pieces do not necessarily give the same values for their respective stress-strain properties. This is mainly because in stretched rings, the stress is not uniform over the cross-section. A second factor is in the existence of "grain" which might cause dumbbells to give different values depending on whether their length is parallel or at right angles to the grain.

The main points to be noted in choosing between rings and dumbbells are as follows.

a) Tensile strength

   Dumbbells are preferable for determination of tensile strength. Rings give lower, sometimes much lower, values than dumbbells.

b) Elongation at break

   Rings give approximately the same values as dumbbells, provided that

   1) the elongation of rings is calculated as a percentage of the initial internal circumference, and

   2) dumbbells are cut at right angles to the grain if this is present to a significant degree.

   Dumbbells shall be used if it is required to study grain effects, as rings are not suitable for this purpose.

c) Elongation at a given stress and stress at a given elongation

   The larger dumbbells (types 1, 2 and 1A) are generally preferred.

   Rings and dumbbells give approximately the same values provided that

   1) the elongation of rings is calculated as a percentage of the initial mean circumference, and

   2) the average value is taken for dumbbells cut parallel and at right angles to the grain if this is present to a significant degree.

   Rings might be preferred in automated testing, due to the ease of handling of the test pieces, and in the determination of stress at a given strain.

6 Test pieces

6.1 General

Miniature test pieces might give somewhat different, usually higher, values for tensile strength and elongation at break than the larger test pieces.

Seven types of test piece are provided, i.e. dumbbell-shaped types 1, 2, 3, 4 and 1A and ring-shaped types A (normal) and B (miniature). The results obtained for a given material are likely to vary according to the

© ISO 2024 – All rights reserved

Documents
Document Sharing Hub
Full document details: BS ISO 37:2024

type of test piece used and the results obtained for different materials should therefore not be regarded as comparable unless the same type of test piece has been used.

When preparation of test pieces requires buffing or thickness adjustment, results might be affected.

6.2 Dumbbells

Dumbbell test pieces shall have the outline shown in Figure 2.

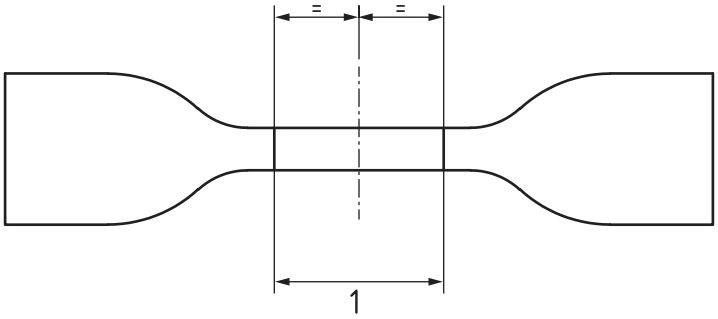

Key

1 test length (see Table 1)

Figure 2 — Shape of dumbbell test pieces

The standard thickness of the narrow portion shall be 2,0 mm ± 0,2 mm for types 1, 2, 3 and 1A and 1,0 mm ± 0,1 mm for type 4.

The test length shall be in accordance with Table 1.

The other dimensions of the dumbbells shall be as produced by the appropriate die (see Table 2).

For non-standard test pieces, e.g. those taken from finished products, the maximum thickness of the narrow portion shall be 3,0 mm for types 1 and 1A, 2,5 mm for types 2 and 3, and 2,0 mm for type 4.

Table 1 — Test length of dumbbells

Type of test piece	Type 1	Type 1A	Type 2	Type 3	Type 4
Test length (mm)	25 ± 0,5	20 ± 0,5[a]	20 ± 0,5	10 ± 0,5	10 ± 0,5
[a] The test length shall not exceed the length of the narrow portion of the test piece (dimension C in Table 2).					

Type 3 and 4 dumbbell test pieces shall only be used where insufficient material is available for the larger test pieces. These test pieces are particularly suitable for testing products and are used in certain product standards, e.g. type 3 dumbbells have been used for testing pipe sealing rings and cable coverings.

6.3 Rings

The standard type A ring test piece shall have an internal diameter of 44,6 mm ± 0,2 mm. The median axial thickness and median radial width shall be 4 mm ± 0,2 mm. The radial width of any ring shall nowhere deviate from the median by more than 0,2 mm and the axial thickness of the ring shall nowhere deviate from the median by more than 2 %.

The standard type B ring test piece shall have an internal diameter of 8 mm ± 0,1 mm. The median axial thickness and median radial width shall be 1 mm ± 0,1 mm. The radial width of any ring shall nowhere deviate from the median by more than 0,1 mm. This test piece shall be used only where insufficient material is available for the larger type A test piece.

© ISO 2024 – All rights reserved

Documents
Document Sharing Hub
Full document details: BS ISO 37:2024