BS ISO 3845:2024

BSI Standards Publication

Oil and gas industries including lower carbon energy — Full ring ovalization test method for the evaluation of the cracking resistance of steel line pipe in sour service

Documents
Document Sharing Hub

Full document details: BS ISO 3845:2024

National foreword

This British Standard is the UK implementation of ISO 3845:2024.

The UK participation in its preparation was entrusted to Technical Committee PSE/17, Materials and equipment for petroleum, petrochemical and natural gas industries.

A list of organizations represented on this committee can be obtained on request to its committee manager.

Contractual and legal considerations

This publication has been prepared in good faith, however no representation, warranty, assurance or undertaking (express or implied) is or will be made, and no responsibility or liability is or will be accepted by BSI in relation to the adequacy, accuracy, completeness or reasonableness of this publication. All and any such responsibility and liability is expressly disclaimed to the full extent permitted by the law.

This publication is provided as is, and is to be used at the recipient's own risk.

The recipient is advised to consider seeking professional guidance with respect to its use of this publication.

This publication is not intended to constitute a contract. Users are responsible for its correct application.

© The British Standards Institution 2024
Published by BSI Standards Limited 2024

ISBN 978 0 539 24346 8

ICS 75.200

Compliance with a British Standard cannot confer immunity from legal obligations.

This British Standard was published under the authority of the Standards Policy and Strategy Committee on 31 July 2024.

Amendments/corrigenda issued since publication

Date	Text affected

Documents
Document Sharing Hub

Full document details: BS ISO 3845:2024

International Standard

ISO 3845

First edition
2024-05

Oil and gas industries including lower carbon energy — Full ring ovalization test method for the evaluation of the cracking resistance of steel line pipe in sour service

Industries du pétrole et du gaz, y compris les énergies à faible teneur en carbone — Méthode d'essai de déformation du diamètre d'une conduite en acier pour évaluer sa tenue mécanique en environnement corrosif

Reference number
ISO 3845:2024(en)

© ISO 2024

Documents
Document Sharing Hub

Full document details: BS ISO 3845:2024

COPYRIGHT PROTECTED DOCUMENT

© ISO 2024

All rights reserved. Unless otherwise specified, or required in the context of its implementation, no part of this publication may be reproduced or utilized otherwise in any form or by any means, electronic or mechanical, including photocopying, or posting on the internet or an intranet, without prior written permission. Permission can be requested from either ISO at the address below or ISO's member body in the country of the requester.

ISO copyright office
CP 401 • Ch. de Blandonnet 8
CH-1214 Vernier, Geneva
Phone: +41 22 749 01 11
Email: copyright@iso.org
Website: www.iso.org

Published in Switzerland

Documents
Document Sharing Hub
Full document details: BS ISO 3845:2024

Contents

Page

Foreword ... **v**
Introduction ... **vi**
1 Scope ... **1**
2 Normative references ... **1**
3 Terms and definitions ... **2**
4 Symbols and abbreviated terms ... **6**
5 Principle ... **6**
6 Reagents ... **7**
7 Apparatus ... **8**
7.1 Containment materials ... 8
7.1.1 General ... 8
7.1.2 Lid and base ... 8
7.1.3 Seal rings ... 8
7.2 Internal loading components ... 8
7.3 External loading components ... 10
7.4 Loading component treatment ... 11
7.5 Ancillary components ... 11
8 Sampling ... **12**
8.1 General ... 12
8.2 Ultrasonic testing ... 12
8.3 Magnetic particle testing/penetrant testing ... 12
9 Procedure ... **12**
9.1 General ... 12
9.2 Test specimen ... 12
9.2.1 Machining/Preparation ... 12
9.2.2 Surface preparation ... 13
9.2.3 Specimen loading ... 13
9.3 Preparation of the test cell ... 17
9.4 Test duration and solution parameters ... 17
9.5 Test commencement ... 18
9.6 Monitoring ... 18
9.6.1 Test solution ... 18
9.6.2 Ultrasonic testing ... 19
9.6.3 Hydrogen permeation ... 19
9.6.4 Galvanic coupling ... 19
9.7 Test completion ... 19
9.8 Secondary testing ... 19
9.9 Evaluation of test specimen ... 19
9.9.1 General ... 19
9.9.2 Post-test non-destructive testing ... 20
9.9.3 Metallographic examination ... 20
10 Test report ... **22**
Annex A (normative) **Ultrasonic testing (UT)** ... **24**
Annex B (normative) **Strain gauge installation** ... **29**
Annex C (normative) **Analysis of test solution – Iodometric titration procedure** ... **37**
Annex D (informative) **Summary of the full ring test procedure** ... **40**
Annex E (informative) **Examples of types of cracking** ... **46**
Annex F (informative) **Example of full ring test report and loading report** ... **48**

© ISO 2024 – All rights reserved

Documents
Document Sharing Hub
Full document details: BS ISO 3845:2024

Annex G (informative) **Guidance on acceptance criteria** **51**
Bibliography **52**

© ISO 2024 – All rights reserved

Documents
Document Sharing Hub
Full document details: BS ISO 3845:2024

Foreword

ISO (the International Organization for Standardization) is a worldwide federation of national standards bodies (ISO member bodies). The work of preparing International Standards is normally carried out through ISO technical committees. Each member body interested in a subject for which a technical committee has been established has the right to be represented on that committee. International organizations, governmental and non-governmental, in liaison with ISO, also take part in the work. ISO collaborates closely with the International Electrotechnical Commission (IEC) on all matters of electrotechnical standardization.

The procedures used to develop this document and those intended for its further maintenance are described in the ISO/IEC Directives, Part 1. In particular, the different approval criteria needed for the different types of ISO document should be noted. This document was drafted in accordance with the editorial rules of the ISO/IEC Directives, Part 2 (see www.iso.org/directives).

ISO draws attention to the possibility that the implementation of this document may involve the use of (a) patent(s). ISO takes no position concerning the evidence, validity or applicability of any claimed patent rights in respect thereof. As of the date of publication of this document, ISO had not received notice of (a) patent(s) which may be required to implement this document. However, implementers are cautioned that this may not represent the latest information, which may be obtained from the patent database available at www.iso.org/patents. ISO shall not be held responsible for identifying any or all such patent rights.

Any trade name used in this document is information given for the convenience of users and does not constitute an endorsement.

For an explanation of the voluntary nature of standards, the meaning of ISO specific terms and expressions related to conformity assessment, as well as information about ISO's adherence to the World Trade Organization (WTO) principles in the Technical Barriers to Trade (TBT), see www.iso.org/iso/foreword.html.

This document was prepared by Technical Committee ISO/TC 67, *Oil and gas industries including lower carbon energy*.

Any feedback or questions on this document should be directed to the user's national standards body. A complete listing of these bodies can be found at www.iso.org/members.html.

© ISO 2024 – All rights reserved

Documents
Document Sharing Hub
Full document details: BS ISO 3845:2024

Introduction

Sour service cracking problems in susceptible steel line pipe are caused by the various forms of hydrogen damage due to the presence of wet hydrogen sulfide (H_2S). The main mechanisms are hydrogen-induced cracking (HIC) or stepwise cracking (SWC), sulfide stress cracking (SSC) and stress-oriented hydrogen-induced cracking (SOHIC). An industry-proven technique for assessing the cracking resistance of steel line pipe is to stress a full ring pipe specimen in a sour environment.

The advantages of the full ring test specified in this document are that it is not necessary to pressurize the line pipe full ring specimen to achieve the required stress, and residual stresses are retained. Equivalent internal stresses can be produced by ovalization of the pipe using mechanical means.

Additional advantages are more representative samples, when compared to machined four-point bend specimens and single-sided exposure can allow in-situ inspection during test exposure.

A known stress is exerted at two regions on a full ring section of steel pipe. The pipe specimen is then exposed internally to the sour test solution.

Ultrasonic testing can be conducted regularly on internally loaded test specimens during the exposure period to monitor crack initiation and propagation. Hydrogen permeation measurements may also be conducted. Both crack initiation and propagation can therefore be monitored. Finally, a metallurgical examination is undertaken to classify any indications found by non-destructive testing (NDT), such as visual inspection, magnetic particle testing (MT), penetrant testing (PT) or ultrasonic testing (UT).

The method has been in use since 1984, but in 1991 a Joint Industry Sponsored Project was set up with the aim of systematically developing, defining and validating the full ring test. The resultant test method designed to determine the susceptibility of steel line pipe, bends, flanges and fittings, including all associated welds to hydrogen damage caused by exposure to sour environments, was published by the UK HSE as OTI 95 635[1] and subsequently in 2016 as BS 8701, prior to adoption as ISO 3845.

© ISO 2024 – All rights reserved

Documents
Document Sharing Hub
Full document details: BS ISO 3845:2024

Oil and gas industries including lower carbon energy — Full ring ovalization test method for the evaluation of the cracking resistance of steel line pipe in sour service

WARNING — The use of this document can involve hazardous materials, operations and equipment. It does not purport to address all the safety or environmental problems associated with its use. Attention is drawn to national and health safety practices and regulations regarding the use of hazardous materials prior to use, in particular for hydrogen sulfide.

1 Scope

This document gives a method for determining the resistance to cracking of steel pipes in sour service.

This test method employs a full-scale test specimen consisting of a short length of pipe (a 'full ring'), sealed at each end to contain the sour test environment within. The test method applies to any pipe; seamless, longitudinally welded (with or without filler), helical welded, and to girth welds between pipes.

NOTE 1 The specimen is usually a pipe but can also consist of flange neck or section of a bend, or other tubular component or a combination of the above.

NOTE 2 This test method can also be used for corrosion resistant alloys (CRAs).

The method utilizes ovalization by mechanical loading to produce a circumferential stress, equal to the target hoop stress, at two diametrically opposite locations on the inside surface of the test specimen. The test specimen is then subjected to single sided exposure to the sour test environment.

NOTE 3 The test also allows measurement of hydrogen permeation rates.

2 Normative references

The following documents are referred to in the text in such a way that some or all of their content constitutes requirements of this document. For dated references, only the edition cited applies. For undated references, the latest edition of the referenced document (including any amendments) applies.

ISO 2400, *Non-destructive testing — Ultrasonic testing — Specification for calibration block No. 1*

ISO 3059, *Non-destructive testing — Penetrant testing and magnetic particle testing — Viewing conditions*

ISO 3452 (all parts), *Non-destructive testing – Penetrant testing*

ISO 4787, *Laboratory glass and plastic ware — Volumetric instruments — Methods for testing of capacity and for use*

ISO 6892-1, *Metallic materials — Tensile testing — Part 1: Method of test at room temperature*

ISO 7963, *Non-destructive testing — Ultrasonic testing — Specification for calibration block No. 2*

ISO 8044, *Corrosion of metals and alloys — Vocabulary*

ISO 8501-1, *Preparation of steel substrates before application of paints and related products — Visual assessment of surface cleanliness — Part 1: Rust grades and preparation grades of uncoated steel substrates and of steel substrates after overall removal of previous coatings*

ISO 9934 (all parts), *Non-destructive testing — Magnetic particle testing*

ISO 11666, *Non-destructive testing of welds — Ultrasonic testing — Acceptance levels*

© ISO 2024 – All rights reserved

Documents
Document Sharing Hub
Full document details: BS ISO 3845:2024

ISO 16810, *Non-destructive testing – Ultrasonic testing – General principles*

ISO 17635, *Non-destructive testing of welds — General rules for metallic materials*

ISO 17638, *Non-destructive testing of welds — Magnetic particle testing*

ISO 17640:2018, *Non-destructive testing of welds — Ultrasonic testing — Techniques, testing levels, and assessment*

ISO 22232 (all parts), *Non-destructive testing — Characterization and verification of ultrasonic test equipment*

ISO 23277, *Non-destructive testing of welds — Penetrant testing — Acceptance levels*

ASTM D1193, *Standard Specification for Reagent Water*

ASTM E1237, *Standard Guide for Installing Bonded Resistance Strain Gages*

ASTM F21, *Standard test method for hydrophobic surface films by the atomizer test*

NACE TM0284:2016, *Evaluation of Pipeline and Pressure Vessel Steels for Resistance to Hydrogen-Induced Cracking*

3 Terms and definitions

For the purposes of this document, the terms and definitions given in ISO 8044 and the following apply.

ISO and IEC maintain terminology databases for use in standardization at the following addresses:

— ISO Online browsing platform: available at https://www.iso.org/obp

— IEC Electropedia: available at https://www.electropedia.org/

3.1
ancillary components
parts of the apparatus necessary for the test which are not the loading components to impart *stress* (3.26)

3.2
corrosion-resistant alloy
CRA
alloy intended to be resistant to general and localized corrosion of oilfield environments that are corrosive to carbon steels

[SOURCE: ISO 15156-1:2020, 3.6]

3.3
imperfection
discontinuity or irregularity in the product wall or on the product surface that is detectable by inspection methods outlined in this document

3.4
indication
evidence obtained by non-destructive inspection

3.5
girth weld
butt weld joining one pipe to another (or bend or flange)

3.6
hardness
resistance of metal to *plastic deformation* (3.16), usually determined by indentation

© ISO 2024 – All rights reserved

Documents
Document Sharing Hub
Full document details: BS ISO 3845:2024

3.7
heat-affected zone
HAZ
portion of base metal not melted during brazing, cutting or *welding* (3.31), but whose *microstructure* (3.14) and properties are altered by the thermal cycle of these processes

3.8
helical weld
DEPRECATED: spiral weld
weld running helically (spirally) around the circumference of a pipe formed from strip

3.9
hydrogen-induced cracking
HIC
planar cracking that occurs in carbon and *low alloy steels* (3.12) when atomic hydrogen diffuses into the steel and then combines to form molecular hydrogen at trap sites

[SOURCE: ISO 15156-1:2020, 3.12, modified — Note 1 to entry has been removed.]

3.10
hydrogen permeation
process of atomic hydrogen diffusion through a metal

3.11
longitudinal weld
straight weld running along the longitudinal axis of a pipe

3.12
low alloy steel
steel with a total alloying element content of less than about 5 % mass fraction, but more than specified for carbon steel

[SOURCE: ISO 15156-1:2020, 3.15]

3.13
measured strain
ε_1, ε_2, ε_3
surface *strain* (3.24) as measured by various techniques in one or more of three known directions at the surface

3.14
microstructure
structure of a metal as revealed by microscopic examination of a suitably prepared specimen

[SOURCE: ISO 15156-1:2020, 3.16]

3.15
modulus of elasticity
Young's modulus
E
ratio of tensile or compressive *stress* (3.26) to corresponding *strain* (3.24) below the elastic limit

3.16
plastic deformation
permanent deformation caused by straining beyond the elastic limit

3.17
Poisson's ratio
ν
dimensionless material constant (approximately constant for steel) given by the ratio of contraction/expansion per unit length tangential to the direction of loading over the expansion/contraction per unit length in the direction of loading

© ISO 2024 – All rights reserved

Documents
Document Sharing Hub
Full document details: BS ISO 3845:2024

3.18
principal strain
ε_p
maximum and minimum *strain* (3.24) levels existing at a point on the test surface acting at 90° to each other as calculated from *measured strain* (3.13) values

3.19
residual stress
σ_{res}
stress (3.26) present in a component free of external forces or thermal gradients

[SOURCE: ISO 15156-1:2020, 3.18, modified — The symbol σ_{res} has been added.]

3.20
sour environment
environment where hydrogen sulfide exists in the presence of water

3.21
specific service
conditions of application for the materials/components for which testing is defined to match the customer's requirements

Note 1 to entry: Fitness-for-purpose has also been historically used to define these same requirements.

3.22
specified minimum yield strength
SMYS
minimum *yield strength* (3.34) permitted for a given grade of material in product specifications

3.23
stepwise cracking
SWC
cracking that connects hydrogen-induced cracks on adjacent planes in a steel

Note 1 to entry: This term describes the crack appearance. The linking of hydrogen-induced cracks to produce stepwise cracking is dependent on the local *strain* (3.24) between the cracks and the embrittlement of the surrounding steel by dissolved hydrogen. HIC/SWC is usually associated with low-strength plate steels used in the production of pipes and vessels.

[SOURCE: ISO 15156-1:2020, 3.21]

3.24
strain
ε
dimensionless ratio of the change in length per unit length (e.g. mm/mm)

Note 1 to entry: It is normally expressed in parts per million ($\varepsilon \times 10^6$) of microstrain (με).

3.25
strain gauge
device using electrical resistance, which changes in proportion to applied *strain* (3.24)

3.26
stress
σ
applied force per unit area existing on any object as a result of external mechanical or thermal influences acting in that direction

© ISO 2024 – All rights reserved

Documents
Document Sharing Hub
Full document details: BS ISO 3845:2024

3.27
stress-oriented hydrogen-induced cracking
SOHIC
staggered small cracks formed approximately perpendicular to the principal *stress* (3.26) (residual or applied) resulting in a "ladder-like" crack array linking (sometimes small) pre-existing HIC

Note 1 to entry: The mode of cracking can be categorized as *SSC* (3.28) caused by a combination of external stress and the local *strain* (3.24) around hydrogen-induced cracks. SOHIC is related to SSC and HIC/*SWC* (3.23). It has been observed in parent metal of longitudinally welded pipe and in the *heat-affected zone (HAZ)* (3.7) of welds in pressure vessels. SOHIC is a relatively uncommon phenomenon usually associated with low-strength ferritic pipe and pressure vessel steels.

[SOURCE: ISO 15156-1:2020, 3.23]

3.28
sulfide stress cracking
SSC
cracking of metal involving corrosion and *tensile stress* (3.29) (residual and/or applied) in the presence of water and H_2S

Note 1 to entry: SSC is a form of hydrogen stress cracking (HSC) and involves the embrittlement of the metal by atomic hydrogen that is produced by acid corrosion on the metal surface. Hydrogen uptake is promoted in the presence of sulfides. The atomic hydrogen can diffuse into the metal, reduce ductility, and increase susceptibility to cracking. High-strength metallic materials and hard weld zones are prone to SSC.

[SOURCE: ISO 15156-1:2020, 3.24]

3.29
tensile stress
ratio of load to original cross-sectional area

Note 1 to entry: These stresses include axial or longitudinal, circumferential or hoop and residual.

3.30
ultrasonic testing
testing of material by ultrasound for the presence of *imperfections* (3.3)

3.31
welding
joining of two metallic materials, usually by fusion techniques

3.32
weldment
portion of a component on which *welding* (3.31) has been performed, including the *weld metal* (3.33), the *heat-affected zone (HAZ)* (3.7), and the adjacent parent metal

[SOURCE: ISO 15156-2:2020, 3.24, modified — The abbreviated term for "heat-affected zone", HAZ, has been added.]

3.33
weld metal
portion of a *weldment* (3.32) that has been molten during *welding* (3.31)

3.34
yield strength
stress (3.26) at which a material exhibits a specified deviation from the proportionality of stress to *strain* (3.24)

Note 1 to entry: The deviation is expressed in terms of strain by either the offset method (usually at a strain of 0,2 %) or the total-extension-under-load method (usually at a strain of 0,5 %).

© ISO 2024 – All rights reserved

Documents
Document Sharing Hub
Full document details: BS ISO 3845:2024

4 Symbols and abbreviated terms

AYS	actual yield strength
CAR	crack area ratio
CRA	corrosion-resistant alloy
DAC	distance-amplitude-corrected
E	modulus of elasticity
EPDM	ethylene propylene diene monomer
EPM	ethylene propylene copolymer
HAZ	heat-affected zone
HIC	hydrogen-induced cracking
MT	magnetic particle testing
NBR	nitrile butadiene rubber
NDT	non-destructive testing
PT	penetrant testing
PTFE	polytetrafluoroethylene
$R_{p0,2}$	0,2 % proof stress in accordance with ISO 6892-1
SOHIC	stress-oriented hydrogen-induced cracking
SMYS	specified minimum yield strength
SSC	sulfide stress cracking
SWC	step-wise cracking
SZC	soft-zone cracking
UT	ultrasonic testing
ε	strain
ε_p	principal strain
υ	Poisson's ratio
σ	stress
σ_p	principal stress
σ_{res}	residual stress

5 Principle

A short length of pipe (a ‘full ring’) is mechanically loaded to produce a circumferential stress equal to the target hoop stress at two diametrically opposite locations on the inside surface of the test specimen. The test specimen is subjected to a predetermined stress by ovalization and exposed to a sour environment. Testing is undertaken within an enclosure or in a restricted area.

© ISO 2024 – All rights reserved

Documents
Document Sharing Hub
Full document details: BS ISO 3845:2024

The test specimen may be monitored throughout the test exposure to determine the extent of development of hydrogen damage due to the presence of wet hydrogen sulfide (H_2S). It is then subjected to post-test non-destructive testing and metallographic examination.

6 Reagents

6.1 The following reagent grade or higher-purity chemicals shall be used:

— sodium acetate, CH_3COONa;

— sodium chloride, NaCl;

— acetic acid, CH_3COOH;

— hydrochloric acid, HCl;

— sodium hydroxide, NaOH.

6.2 The following gases shall be used:

— hydrogen sulfide, 99,5 % minimum;

— carbon dioxide, 99,995 % minimum;

— inert gas used for the removal of oxygen, such as nitrogen, argon, or other non-reactive gas, 99,998 % minimum.

6.3 Water, distilled or deionized, conforming to the minimum purity requirements of Type IV of ASTM D1193 shall be used.

6.4 Test environment

6.4.1 General

The test solution used shall be reported for each test. All reagents added to the test solution shall be measured to ±1,0 % of the quantities specified.

The test solution shall be prepared in a separate sealed vessel followed by sparging with inert gas prior to transferring the test solution to the test cell, which has been subjected to inert gas purging in advance (see 9.5).

The test solution pH before transfer to the test cell shall be measured and verified to conform with requirements.

The H_2S concentration in the solution shall be measured using the iodometric titration method described in Annex C, or other equivalent method (e.g. photometric measurement).

6.4.2 Test solutions

The following test solutions shall be used depending on the specific test requirements:

a) NACE TM0284 Solution A: This test solution shall consist of a mass fraction of 5,0 % NaCl and 0,50 % CH_3COOH in distilled or deionized water (i.e. 50,0 g of NaCl and 5,00 g of CH_3COOH dissolved in 945 g of distilled or deionized water). The initial pH shall be 2,7 ± 0,1. Alteration of the test solution chemistry to adjust pH is not allowed. If the test solution pH is out of range the solution shall be discarded.

© ISO 2024 – All rights reserved

Documents
Document Sharing Hub
Full document details: BS ISO 3845:2024

b) NACE TM0284 Solution C ('fitness for purpose' solution): This test solution shall consist of a mass fraction of 5,0 % NaCl and 0,40 % CH_3COONa in distilled or deionized water (i.e. 50,0 g of NaCl and 4,00 g of CH_3COONa dissolved in 946 g of distilled or deionized water).

The target pH shall be defined by the customer. The initial pH shall be adjusted to the target pH ±0,2 by addition of HCl or NaOH before saturation with H_2S or the H_2S/CO_2 gas mixture.

c) Customer specified/field specific test solution.

NOTE a) and b) are equivalent to the test environments defined in ISO 15156-2:2020, Annex B.

6.4.3 Test gas composition

One of the following test gases shall be used depending on the specific test requirements:

a) NACE TM0284 Solution A: H_2S;

b) NACE TM0284 Solution C: H_2S or test gas mixtures consisting of H_2S and CO_2;

c) customer specified/field specific test solution: H_2S or test gas mixtures consisting of H_2S and CO_2 or H_2S and N_2.

The test gas or mixture composition shall be defined by the customer. Pre-mixed commercial test gas mixtures shall have a composition verified by analysis. Continuously-blended test gas mixtures shall have a composition verified by measurement. Each pure component gas used for continuously-blended test gas mixtures shall conform to the requirements of 6.2.

7 Apparatus

7.1 Containment materials

7.1.1 General

All materials employed in the test equipment shall be resistant to the test environment over the duration of the test.

7.1.2 Lid and base

Lid and base shall be made of:

a) polymethylmethacrylate (also known as acrylic) of appropriate thickness to avoid deformation with surfaces pre-treated with 50 % acetic acid solution for 1 h to 2 h;

b) PTFE coated/lined steel; or

c) other materials conforming to 7.1.1.

7.1.3 Seal rings

Seal rings shall be made from material conforming to 7.1.1

NOTE NBR, EPM/EPDM and PTFE have been found to be suitable seal materials.

7.2 Internal loading components

An example of the internal loading components that may be used to apply the stress to the specimen is shown in Figure 1.

© ISO 2024 – All rights reserved

Documents
Document Sharing Hub
Full document details: BS ISO 3845:2024

The turnbuckle consists of a barrel with a left- and right-handed thread bore, into which two sections screw with the appropriate thread.

NOTE 1 ACME (ballistic) threading has been found to be suitable. Austenitic stainless steel has been found to be reusable and has not led to detrimental galvanic effects.

The face of the load distribution block which fits against the ring section is profiled to fit the ring section to ensure even load application.

The load distribution blocks shall consist of a galvanically compatible material to that of the internal surface of the specimen. Loading blocks shall be sufficiently rigid so that the applied load is maintained over the duration of the test.

NOTE 2 Low alloy steel has been found to be suitable.

© ISO 2024 – All rights reserved

Documents
Document Sharing Hub
Full document details: BS ISO 3845:2024

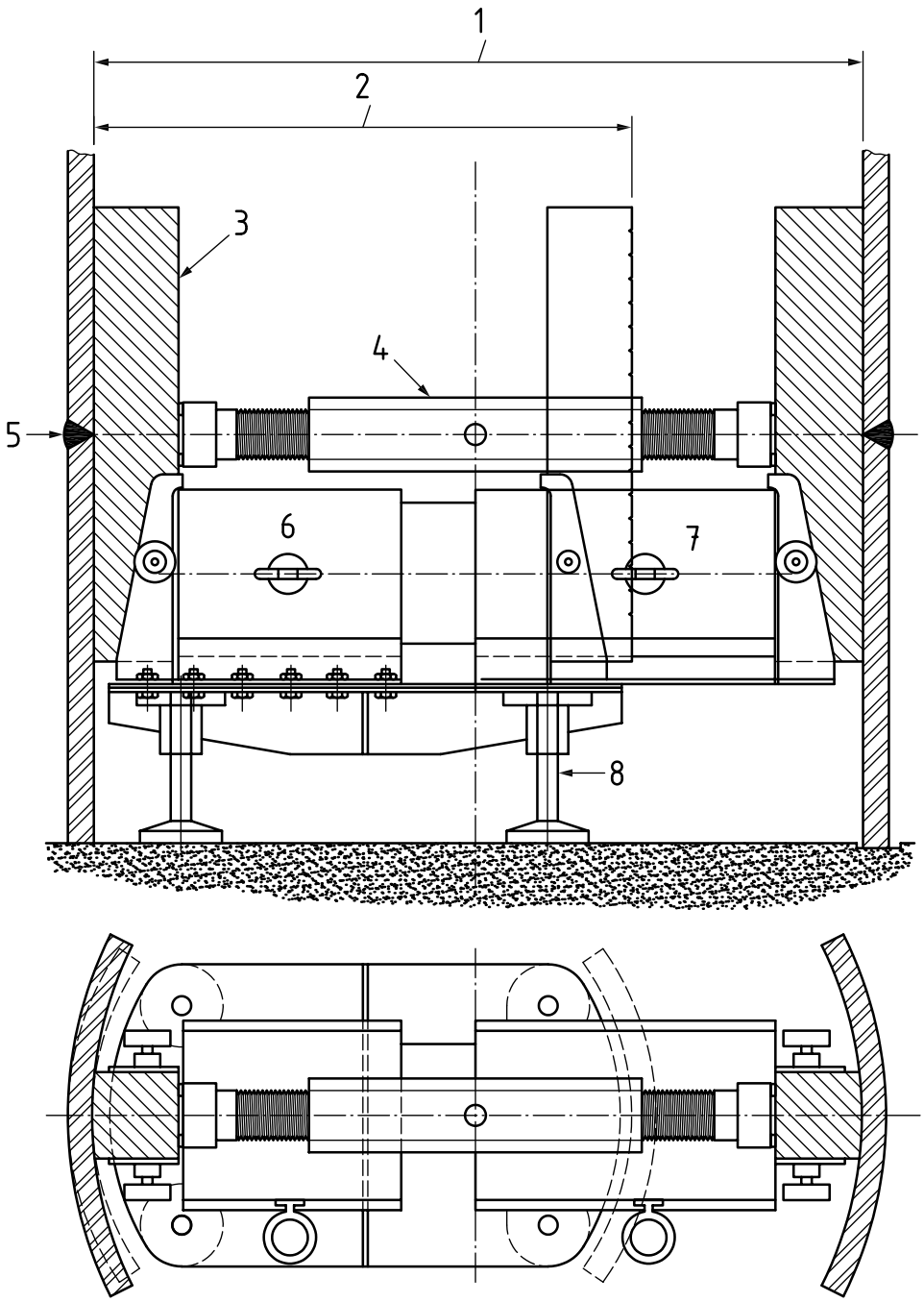

Key

1 pipe inside diameter
2 closed jack position
3 load distribution blocks
4 turnbuckle
5 weldment
6 hydraulic jack
7 spacer block
8 height adjustable supports

Figure 1 — Example of internal loading components

7.3 External loading components

External loading of the test specimen may be required, e.g. for pipe diameters <300 mm or with larger diameter pipe of thick wall/diameter combinations which preclude internal loading. Figure 2 shows a typical configuration of specimen and loading components. External loading imparts the target strain at the

© ISO 2024 – All rights reserved

Documents
Document Sharing Hub
Full document details: BS ISO 3845:2024

centre of the contact location on each block and, as such, precludes the in-test UT assessment. Internal strain gauging is used to monitor the load application.

Loading blocks shall be sufficiently rigid so that the applied load is maintained over the duration of the test.

The internal face (contact surface) in the centre of the block shall have a machined longitudinal slot with a minimum arc length of 75 mm or 5 % of the pipe circumference, whichever is greater, and should have a radius typically equivalent to 1,05 to 1,10 times the anticipated maximum external radius of the test specimen under loading.

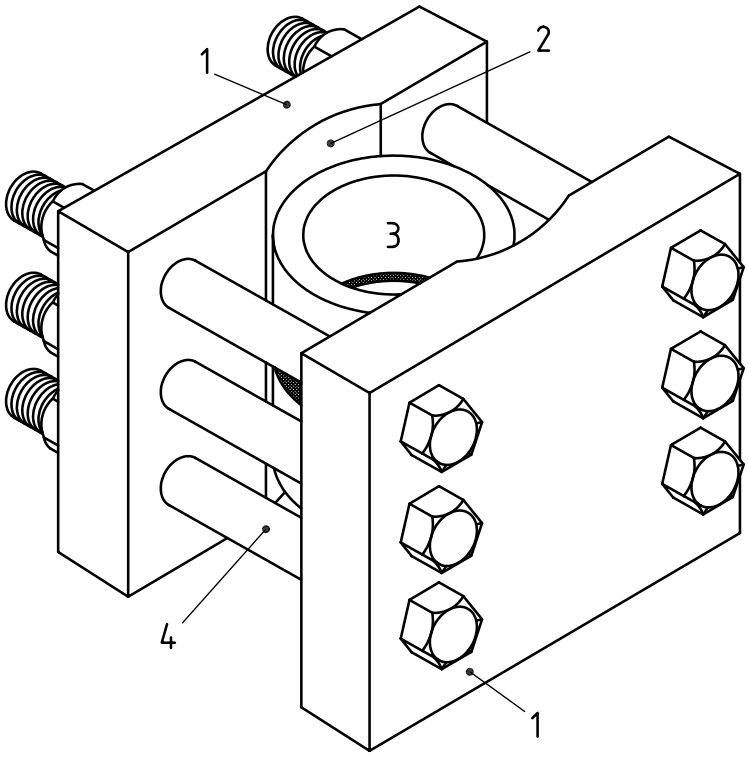

Key

1 loading blocks with clearance holes

2 radius longitudinal slot

3 ring specimen

4 bolts with nuts/washers

Figure 2 — Example of external loading components

7.4 Loading component treatment

Both internal and external forms of loading components (see Figures 1 and 2) shall be designed for repeated use. At the conclusion of the full ring test, any loading components that have been submerged within the test solution shall be thoroughly wire brushed and, where practicable, submerged in oil until required for further use. On removal from the oil, the components shall be degreased. At no time shall loading components of either form come into contact with greases containing copper (Cu) or molybdenum disulfide (MoS_2).

7.5 Ancillary components

Ancillary components in contact with or exposed to the test environment, such as thermowells, shall conform to 7.1.1.

© ISO 2024 – All rights reserved

Documents
Document Sharing Hub
Full document details: BS ISO 3845:2024