BS ISO 3957:2025

BSI Standards Publication

Reaction to fire tests — Parallel panel test method for wall systems — Measurement of heat release and smoke production

Documents
Document Sharing Hub

Full document details: BS ISO 3957:2025

National foreword

This British Standard is the UK implementation of ISO 3957:2025.

The UK participation in its preparation was entrusted to Technical Committee FSH/21/-/7, Reaction to fire tests - Large and intermediate scale tests.

A list of organizations represented on this committee can be obtained on request to its committee manager.

Contractual and legal considerations

This publication has been prepared in good faith, however no representation, warranty, assurance or undertaking (express or implied) is or will be made, and no responsibility or liability is or will be accepted by BSI in relation to the adequacy, accuracy, completeness or reasonableness of this publication. All and any such responsibility and liability is expressly disclaimed to the full extent permitted by the law.

This publication is provided as is, and is to be used at the recipient's own risk.

The recipient is advised to consider seeking professional guidance with respect to its use of this publication.

This publication is not intended to constitute a contract. Users are responsible for its correct application.

© The British Standards Institution 2025
Published by BSI Standards Limited 2025

ISBN 978 0 539 31782 4

ICS 13.220.99

Compliance with a British Standard cannot confer immunity from legal obligations.

This British Standard was published under the authority of the Standards Policy and Strategy Committee on 31 July 2025.

Amendments/corrigenda issued since publication

Date	Text affected

Documents
Document Sharing Hub

Full document details: BS ISO 3957:2025

International Standard

ISO 3957

Reaction to fire tests — Parallel panel test method for wall systems — Measurement of heat release and smoke production

First edition
2025-07

Reference number
ISO 3957:2025(en)

© ISO 2025

Documents
Document Sharing Hub

Full document details: BS ISO 3957:2025

COPYRIGHT PROTECTED DOCUMENT

© ISO 2025

All rights reserved. Unless otherwise specified, or required in the context of its implementation, no part of this publication may be reproduced or utilized otherwise in any form or by any means, electronic or mechanical, including photocopying, or posting on the internet or an intranet, without prior written permission. Permission can be requested from either ISO at the address below or ISO's member body in the country of the requester.

ISO copyright office
CP 401 • Ch. de Blandonnet 8
CH-1214 Vernier, Geneva
Phone: +41 22 749 01 11
Email: copyright@iso.org
Website: www.iso.org

Published in Switzerland

Documents
Document Sharing Hub
Full document details: BS ISO 3957:2025

Contents

Page

Foreword ... **iv**
Introduction ... **v**
1 Scope ... **1**
2 Normative references ... **1**
3 Terms and definitions ... **2**
4 Symbols ... **2**
5 Principle ... **3**
6 Test facility and instrumentation section ... **4**
7 Apparatus ... **4**
7.1 General ... 4
7.2 Metal frames ... 5
7.3 Sand burner and fuel supply ... 6
7.4 Weighing platform (Optional) ... 9
7.5 Assembly preparation ... 9
7.6 Instrumentation and videography ... 10
7.7 Data recording and processing ... 10
8 Calibration ... **11**
8.1 Gas analyser system ... 11
8.2 Propane sand burner calibration ... 11
8.3 Heat flux exposure to parallel walls ... 12
8.4 Smoke measurement system ... 13
8.5 System response ... 13
8.6 Weighing platform (optional) ... 13
9 Test procedure and settings ... **13**
10 Calculations and analysis ... **14**
11 Test report ... **14**
Annex A (informative) **Literature background and performance guidance** ... **16**
Annex B (informative) **Calorimeter design** ... **19**
Annex C (informative) **Propane burner calibrations** ... **23**
Annex D (informative) **Repeatability** ... **27**
Bibliography ... **36**

© ISO 2025 – All rights reserved

Documents
Document Sharing Hub
Full document details: BS ISO 3957:2025

Foreword

ISO (the International Organization for Standardization) is a worldwide federation of national standards bodies (ISO member bodies). The work of preparing International Standards is normally carried out through ISO technical committees. Each member body interested in a subject for which a technical committee has been established has the right to be represented on that committee. International organizations, governmental and non-governmental, in liaison with ISO, also take part in the work. ISO collaborates closely with the International Electrotechnical Commission (IEC) on all matters of electrotechnical standardization.

The procedures used to develop this document and those intended for its further maintenance are described in the ISO/IEC Directives, Part 1. In particular, the different approval criteria needed for the different types of ISO document should be noted. This document was drafted in accordance with the editorial rules of the ISO/IEC Directives, Part 2 (see www.iso.org/directives).

ISO draws attention to the possibility that the implementation of this document may involve the use of (a) patent(s). ISO takes no position concerning the evidence, validity or applicability of any claimed patent rights in respect thereof. As of the date of publication of this document, ISO had not received notice of (a) patent(s) which may be required to implement this document. However, implementers are cautioned that this may not represent the latest information, which may be obtained from the patent database available at www.iso.org/patents. ISO shall not be held responsible for identifying any or all such patent rights.

Any trade name used in this document is information given for the convenience of users and does not constitute an endorsement.

For an explanation of the voluntary nature of standards, the meaning of ISO specific terms and expressions related to conformity assessment, as well as information about ISO's adherence to the World Trade Organization (WTO) principles in the Technical Barriers to Trade (TBT), see www.iso.org/iso/foreword.html.

This document was prepared by Technical Committee ISO/TC 92, *Fire safety*, Subcommittee SC 1, *Fire initiation and growth*.

Any feedback or questions on this document should be directed to the user's national standards body. A complete listing of these bodies can be found at www.iso.org/members.html.

© ISO 2025 – All rights reserved

Documents
Document Sharing Hub
Full document details: BS ISO 3957:2025

Introduction

This large-scale fire test standard is developed for the purpose of measuring the heat release rate (HRR) and the smoke-production rate (SPR) of exterior and interior wall systems, exposed under severe fire scenarios using a parallel panel setup. Severe fire exposure to an exterior wall system can be either caused by spill plumes from a window, such as in a post-flashover compartment fire, or an exterior fire source such as in a dumpster, vehicle, or balcony storage. Some extreme scenarios for an exterior fire include city conflagration (e.g. after an earthquake) or wildland-urban-interface (WUI) fires. Severe interior wall fires can be caused by combustible storage located inside a facility, such as warehouse and manufacturing occupancies, close to the corners of wall system. A common factor of such fire scenarios is the absence or an inadequacy of the traditional active fire protection safeguards (e.g. sprinklers) leading to unmitigated heat exposures to wall systems.

A sufficiently high heat flux is required to simulate such fire exposures — a high heat flux can reveal the flammability of the encapsulated materials used in the wall systems, as well as the vulnerabilities of facers, joints and other components. Literature[1] shows that severe fire exposure to wall systems is in the order of 100 kW/m^2. For this purpose, three large-scale fire tests are known to simulate realistically severe fire exposures of about 100 kW/m^2, and are used to evaluate the performance of both exterior and interior wall systems[2]to[5]. These three large-scale fire tests include the 7,6 m (25-ft) high corner fire test, 15 m (50-ft) high corner fire test, and 4,9 m (16-ft) high parallel panel test of the ANSI/FM 4880 standard; the latter is henceforth abbreviated as 16-ft PPT. This document is based on the 16-ft PPT method. The literature background of the method is provided in Annex A.

The 16-ft PPT setup is placed under a large-scale (minimum 3,5 MW) calorimeter in an indoor facility and is therefore not affected by outdoor weather conditions. The HRR measured during the tests provides an objective evaluation to the fire performance of specimens. The test setup is further utilized to evaluate the smoke hazard of the wall systems used in smoke sensitive occupancies from property insurance perspective[3].

© ISO 2025 – All rights reserved

Documents
Document Sharing Hub
Full document details: BS ISO 3957:2025

Documents
Document Sharing Hub

Reaction to fire tests — Parallel panel test method for wall systems — Measurement of heat release and smoke production

WARNING — So that suitable precautions can be taken to safeguard health, the attention of all concerned in fire tests is drawn to the possibility that toxic or harmful gases can be evolved during combustion of test specimens.

Suitable respiratory protection shall be worn by those in the test room when the atmosphere in the test room becomes unacceptable.

The test procedure involves high temperatures and combustion processes, from ignition to a fully developed fire. Hazards can arise, e.g. burning or ignition of extraneous objects or clothing. Operators should use full turn out firefighting gear including self-contained breathing apparatus.

Specimens can be difficult to extinguish, particularly those with combustible content burning inside metallic facings. At least one charged water hose should be available for all tests.

Specimen collapse can occur. All personnel within the test area should remain at a sufficient distance from the test specimen to avoid injury in case of specimen collapse.

Combustible or sensitive elements that are not part of the test specimen, such as wires, pipes and gages close to the setup shall be covered with fire protection blankets.

1 Scope

This document specifies a large-scale fire test method for measuring the heat release rate (HRR) and the smoke-production rate (SPR) of wall systems. The fire scenario covered in this document is representative of severe fires originating in near wall or corner locations of an exterior or interior wall construction. A severe fire scenario is defined that imparts a heat flux on the order of 100 kW/m^2 to the wall systems. These include exterior fire scenarios such as dumpster, balcony storage fires, and vehicle fires originating outside buildings. Fires caused by combustible storage inside unsprinklered or inadequately sprinklered occupancies, such as warehouse and manufacturing occupancies, represent a few examples of severe interior fires.

This document measures the HRR and SPR in accordance with ISO 24473. This document also provides guidelines for heat release and smoke production performance limits, developed and used for risk evaluation by the insurance industry.

The test method is not applicable to scenarios where a fire initiates within an air cavity, if present, of an exterior wall system. The test method does not incorporate a window structure and is therefore not applicable to fire spread hazards resulting from inadequately protected window openings in a post-flashover fire scenario.

2 Normative references

The following documents are referred to in the text in such a way that some or all of their content constitutes requirements of this document. For dated references, only the edition cited applies. For undated references, the latest edition of the referenced document (including any amendments) applies.

ISO 13943, *Fire safety — Vocabulary*

ISO 24473:2008, *Fire tests — Open calorimetry — Measurement of the rate of production of heat and combustion products for fires of up to 40 MW*

© ISO 2025 – All rights reserved

Documents
Document Sharing Hub
Full document details: BS ISO 3957:2025

3 Terms and definitions

For the purposes of this document, the terms and definitions given in ISO 13943 and the following apply.

ISO and IEC maintain terminology databases for use in standardization at the following addresses:

— ISO Online browsing platform: available at https://www.iso.org/obp

— IEC Electropedia: available at https://www.electropedia.org/

3.1
collapse
development of failure mechanisms in an exterior wall system to a degree involving disintegration and falling (parts of) structural members

3.2
component
part or element of an exterior wall assembly, including but not limited to, the building panel, foam system, cladding, joint systems, rails, brackets, sealants, insulation, continuous insulation, fire barrier, thermal barrier, water resistive barrier

3.3
fire propagation
increase in the exposed surface area of the specimen that is actively involved in flaming combustion

[SOURCE: ISO 12136:2011, 3.4]

3.4
smoke production rate
rate of smoke produced during the fire test

3.5
smoke sensitive occupancy
occupancy which is susceptible to damage due to smoke infiltration or contamination

3.6
smoke yield
ratio of the total mass of smoke released to the total mass of the material vaporized

[SOURCE: ISO 12136:2011, 3.5]

3.7
thermal barrier
material that both limits the transfer of heat and remains in place when exposed to a standard fire exposure for a specified period of time

4 Symbols

A_D	exhaust duct cross-sectional area	m^2
c_p	mass specific heat capacity of a material	kJ/g-K
$\Delta H_{C3H8,LHV}$	lower heat value of propane	kJ/g
K	thermal conductivity of a material	kW/m-K
M_{C3H8}	molecular weight of propane	g/mol
Δp_{max}	maximum pressure drop in the exhaust duct	N/m^2
p_s	standard pressure condition	Pa

© ISO 2025 – All rights reserved

Documents
Document Sharing Hub
Full document details: BS ISO 3957:2025

$\dot{Q}$	target chemical HRR	kW
$\dot{Q}'_{\mathrm{Ch}}$	chemical HRR per unit width of a material	kW/m
$\dot{Q}'_{\mathrm{Ch,Max}}$	maximum chemical HRR per unit width of a material	kW/m
$\dot{Q}'_{\mathrm{R}}$	radiative HRR per unit width of a material	kW/m
$\dot{q}''$	net heat flux to the sample ahead of the pyrolysis zone	kW/m^2
$\hat{R}$	universal gas constant	J/mol-K
R^2	coefficient of determination	—
ΔT_{ig}	ignition temperature of the material above ambient	K
λ	thermal response parameter of a material	kW-s$^{1/2}$m^{-2}
T_{s}	standard temperature condition	K
v	vertical flame spread rate	m/s
$\dot{V}_{\mathrm{C3H8,est}}$	estimated propane volumetric flow rate	m^3/s
$\dot{V}_{\mathrm{D,max}}$	maximum exhaust duct flow rate	m^3/s
y_{f}	flame height	m
y_{p}	pyrolysis zone height	m
$y_{\mathrm{p,Max}}$	maximum pyrolysis zone height	m
α	proportionality constant	—
ρ	density of a material	g/m^3
ρ_{a}	exhaust air density	kg/m^3
τ_{ig}	ignition time	s
χ_{Ch}	chemical efficiency of combustion	—
χ_{R}	radiative fraction	—

5 Principle

This large-scale fire test method evaluates the HRR and SPR performance of wall systems under a scenario representing severe fires.

The test consists of two 4,9 m (16,0 ft) high and 1,1 m (3,5 ft) wide wall assemblies parallelly mounted at 0,53 m (1,75 ft) separation. A propane sand burner of 360 kW exposure provides an approximately 100 kW/m^2 heat flux to the lower portion of both wall assemblies. The test setup is placed under an ISO 24473 compliant large-scale calorimeter (minimum 3,5 MW HRR capacity), to measure time-resolved HRR and SPR from the wall assemblies during the test. The setup may optionally be installed on a weighing platform to provide mass loss data during the test.

Guidance on thresholds for HRR and SPR performance criteria, based on the risk evaluation from the property insurance perspective[2][3], is provided in A.3.

© ISO 2025 – All rights reserved

Documents
Document Sharing Hub
Full document details: BS ISO 3957:2025

6 Test facility and instrumentation section

The test setup shall be located in an indoor facility. The test facility height and scale shall be in accordance with ISO 24473.

The calorimeter, or fire products collector (FPC), shall be large enough in terms of capacity to conduct, and accurately measure, up to 3,5 MW HRR during the tests. But, for the safety purposes and to avoid plume spillage, it is recommended to use an FPC of 5,0 MW. Annex B provides description of a 5,0 MW calorimeter presently used at a test facility, and an alternative 3,5 MW calorimeter.

The calorimetry instrumentation section of the exhaust duct shall contain gas velocity probes, gas thermocouples, an absolute pressure transducer, gas sampling probes, a multi-gas analyser system, and a smoke measurement system that conforms to ISO 24473. A description of these systems used at a test facility in the US that houses a 5,0 MW calorimeter is provided in Annex B.

7 Apparatus

7.1 General

The test apparatus consists of two 4 900 mm ± 100 mm (16,0 ft) high and 1 100 mm ± 50 mm (3,5 ft) wide wall assemblies parallelly mounted with the exterior facer of each assembly at 530 mm ± 25 mm (1,75 ft) separation, as shown in Figure 1. The wall assemblies shall be mounted on two metal frames. Each metal frame is first covered with a 13 mm ± 1 mm (0,5 in) thick plywood and 25 mm ± 1 mm (1,0 in) thick calcium silicate (non-combustible) boards before mounting the wall assembly. Alternative base materials other than plywood are acceptable to back the non-combustible boards. A sand burner of dimensions 1 100 mm ± 50 mm length × 530 m ± 25 mm width × 460 mm ± 25 mm height (3,5 ft × 1,75 ft × 1,5 ft) is located at the base, with the long edge of the burner flush with the lower edge of the two wall assemblies.

© ISO 2025 – All rights reserved

Documents
Document Sharing Hub
Full document details: BS ISO 3957:2025

Dimensions in millimetres

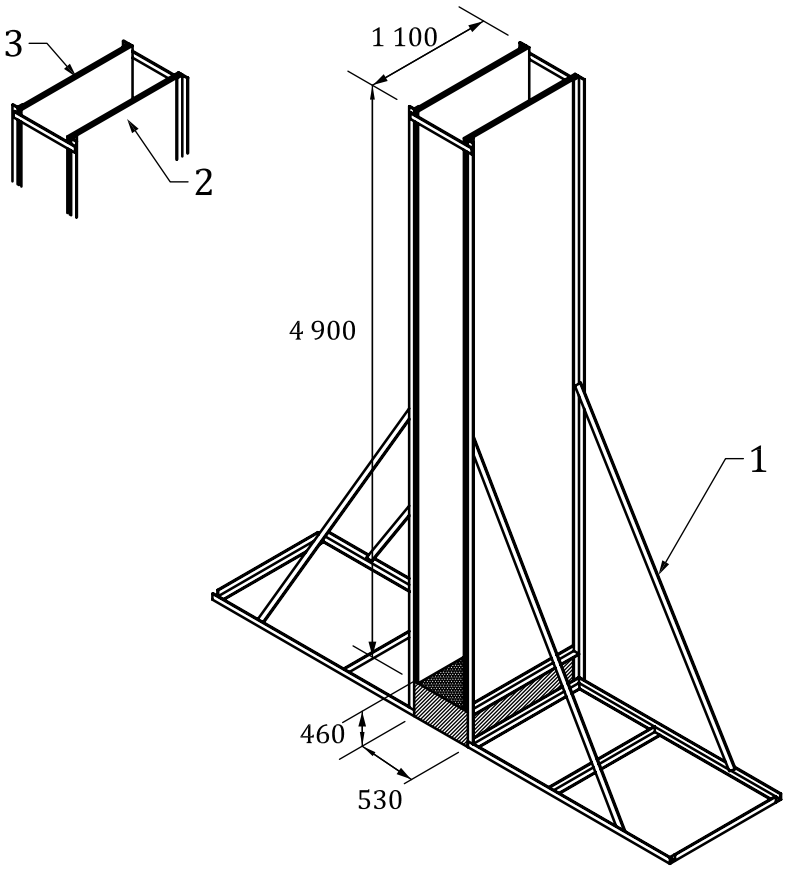

Key

1 angle iron frame

2 13 mm thick plywood

3 25 mm thick non-combustible board

Figure 1 — Schematic of 16-ft PPT apparatus

7.2 Metal frames

All parts of the metal frames shall be constructed from 6,4 mm (0,25 in) ± 0,5 mm thick low carbon (mild) steel or stainless steel. The schematics of the main structure of metal frames are shown in Figure 2. Each structure shall be 5 300 mm (17,5 ft) ± 100 mm high to accommodate 4 900 mm (16,0 ft) ± 100 mm high wall assemblies at the top and a 460 mm ± 25 mm (1,5 ft) high sand burner at the bottom. The width of metal frames shall be 1 100 mm (3,5 ft) ± 50 mm to accommodate wall specimens and a sand burner of the same width (see Figure 1). Both metal frames can contain horizontal angle bars welded at every 1 200 mm (4,0 ft) ± 50 mm interval from the top, in order to provide structural rigidity to hold wall assemblies. A 2 400 mm (8,0 ft) ± 100 mm long angle iron bar is located at the base, as shown in Figure 2. The main structure of metal frames shall be bolted with angle iron frames and floor (or optional weighing platform) to maintain vertical structural stability. The two metal frames structures can be optionally connected to each other at the top via horizontal iron bars, in order to ensure a parallel geometry throughout the height of the structure.

© ISO 2025 – All rights reserved

Documents
Document Sharing Hub
Full document details: BS ISO 3957:2025

Dimensions in millimetres

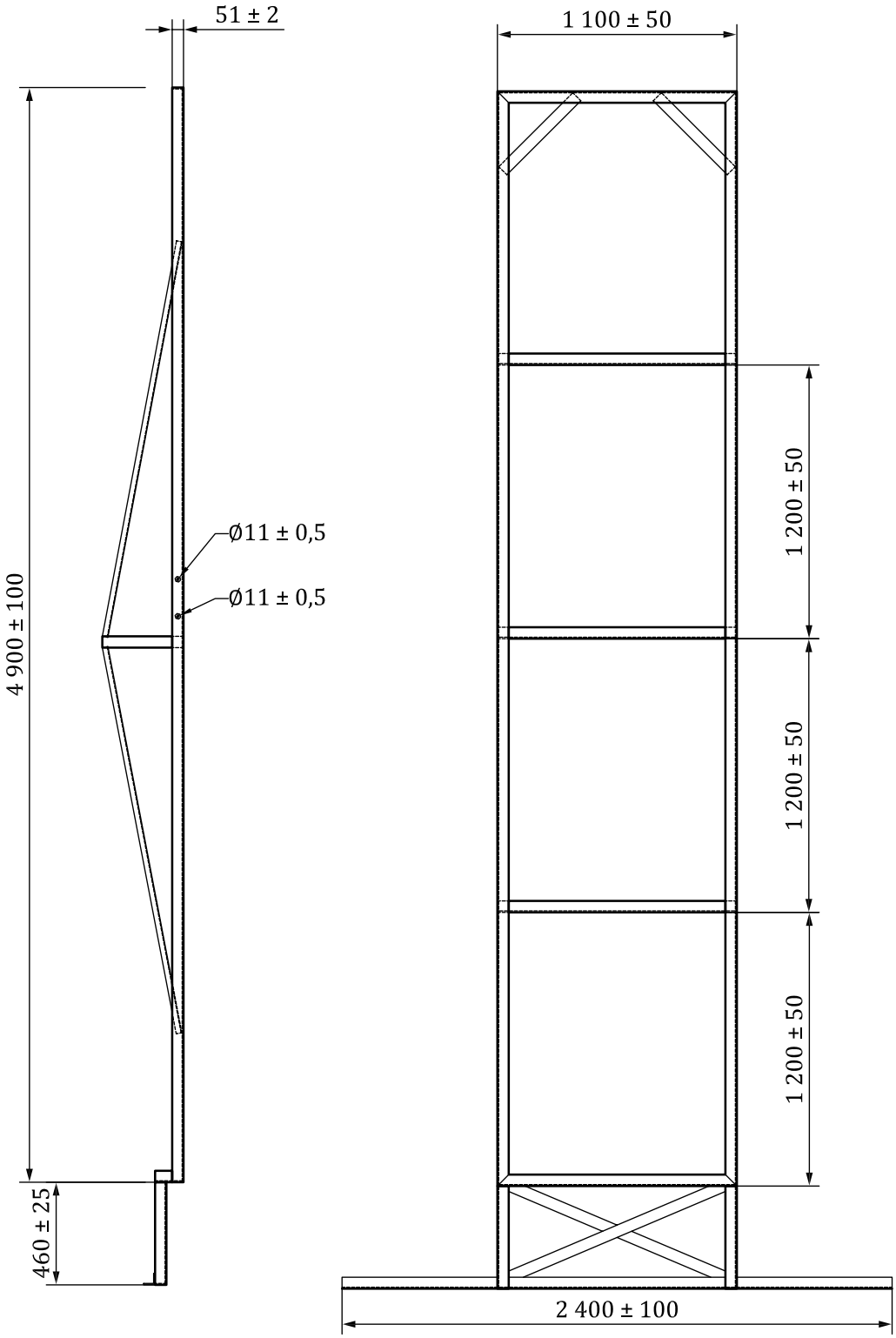

Figure 2 — Schematic of the main structures of metal frames: side and front views

7.3 Sand burner and fuel supply

The ignition source is a sand burner measuring 1 100 mm (3,5 ft) ± 50 mm (length) by 530 mm (1,75 ft) ± 25 mm (width). Figure 3 shows isometric and parametric views of an example of a sand burner housing and its main pipe burner. The sand burner housing shall be 460 mm (1,5 ft) ± 25 mm (height), with 300 mm (1,0 ft) ± 15 mm depth, sufficient to place a pipe burner, screens, stones and sand. A 25 mm (1,0 in)

© ISO 2025 – All rights reserved

Documents
Document Sharing Hub
Full document details: BS ISO 3957:2025