BS ISO 4309:2010

BSI Standards Publication

Cranes — Wire ropes — Care and maintenance, inspection and discard

NO COPYING WITHOUT BSI PERMISSION EXCEPT AS PERMITTED BY COPYRIGHT LAW

raising standards worldwide™

Full document details: BS ISO 4309:2010

National foreword

This British Standard is the UK implementation of ISO 4309:2010. It supersedes BS ISO 4309:2004+A1:2008 which is withdrawn.

The UK participation in its preparation was entrusted to Technical Committee MHE/3, Cranes and derricks.

A list of organizations represented on this committee can be obtained on request to its secretary.

This publication does not purport to include all the necessary provisions of a contract. Users are responsible for its correct application.

© BSI 2010

ISBN 978 0 580 59980 4

ICS 53.020.30

Compliance with a British Standard cannot confer immunity from legal obligations.

This British Standard was published under the authority of the Standards Policy and Strategy Committee on 31 August 2010.

Amendments issued since publication

Date	Text affected

Documents
Document Sharing Hub

Full document details: BS ISO 4309:2010

INTERNATIONAL STANDARD

ISO 4309

Fourth edition
2010-08-01

Cranes — Wire ropes — Care and maintenance, inspection and discard

Appareils de levage à charge suspendue — Câbles — Entretien et maintenance, inspection et dépose

Reference number
ISO 4309:2010(E)

Documents
Document Sharing Hub
© ISO 2010

Full document details: BS ISO 4309:2010

PDF disclaimer

This PDF file may contain embedded typefaces. In accordance with Adobe's licensing policy, this file may be printed or viewed but shall not be edited unless the typefaces which are embedded are licensed to and installed on the computer performing the editing. In downloading this file, parties accept therein the responsibility of not infringing Adobe's licensing policy. The ISO Central Secretariat accepts no liability in this area.

Adobe is a trademark of Adobe Systems Incorporated.

Details of the software products used to create this PDF file can be found in the General Info relative to the file; the PDF-creation parameters were optimized for printing. Every care has been taken to ensure that the file is suitable for use by ISO member bodies. In the unlikely event that a problem relating to it is found, please inform the Central Secretariat at the address given below.

COPYRIGHT PROTECTED DOCUMENT

© ISO 2010

All rights reserved. Unless otherwise specified, no part of this publication may be reproduced or utilized in any form or by any means, electronic or mechanical, including photocopying and microfilm, without permission in writing from either ISO at the address below or ISO's member body in the country of the requester.

ISO copyright office
Case postale 56 • CH-1211 Geneva 20
Tel. + 41 22 749 01 11
Fax + 41 22 749 09 47
E-mail copyright@iso.org
Web www.iso.org

Published in Switzerland

© ISO 2010 – All rights reserved

Documents
Document Sharing Hub

Full document details: BS ISO 4309:2010

Contents

Page

Foreword ... iv

Introduction ... v

1 Scope ... 1

2 Normative references ... 2

3 Terms and definitions ... 2

4 Care and maintenance ... 3
4.1 General ... 3
4.2 Rope replacement ... 3
4.3 Offloading and storing the rope ... 5
4.4 Condition of the rope prior to installation ... 5
4.5 Installing the rope ... 5
4.6 Running-in the new rope ... 8
4.7 Maintaining the rope ... 9
4.8 Maintenance of rope-related parts of the crane ... 9

5 Inspection ... 10
5.1 General ... 10
5.2 Daily visual inspection ... 10
5.3 Periodic inspection ... 10
5.4 Inspection following an incident ... 13
5.5 Inspection following period with crane out of operation ... 13
5.6 Non-destructive testing ... 13

6 Discard criteria ... 14
6.1 General ... 14
6.2 Visible broken wires ... 14
6.3 Decrease in rope diameter ... 17
6.4 Fracture of strands ... 19
6.5 Corrosion ... 19
6.6 Deformation and damage ... 20

Annex A (informative) **Key areas requiring particular close inspection** ... 23

Annex B (informative) **Typical modes of deterioration** ... 25

Annex C (informative) **Internal examination of rope** ... 34

Annex D (informative) **Typical examples of inspection record** ... 37

Annex E (informative) **Useful information on rope deterioration and discard criteria** ... 39

Annex F (informative) **Combined effect assessment of rope condition and severity rating — One method** ... 42

Annex G (informative) **Examples of cross-sections of ropes and corresponding rope category number (RCN)** ... 45

Annex H (informative) **Guidance on assessment and rating of external corrosion** ... 51

Bibliography ... 53

© ISO 2010 – All rights reserved

Documents
Document Sharing Hub
Full document details: BS ISO 4309:2010

Foreword

ISO (the International Organization for Standardization) is a worldwide federation of national standards bodies (ISO member bodies). The work of preparing International Standards is normally carried out through ISO technical committees. Each member body interested in a subject for which a technical committee has been established has the right to be represented on that committee. International organizations, governmental and non-governmental, in liaison with ISO, also take part in the work. ISO collaborates closely with the International Electrotechnical Commission (IEC) on all matters of electrotechnical standardization.

International Standards are drafted in accordance with the rules given in the ISO/IEC Directives, Part 2.

The main task of technical committees is to prepare International Standards. Draft International Standards adopted by the technical committees are circulated to the member bodies for voting. Publication as an International Standard requires approval by at least 75 % of the member bodies casting a vote.

Attention is drawn to the possibility that some of the elements of this document may be the subject of patent rights. ISO shall not be held responsible for identifying any or all such patent rights.

ISO 4309 was prepared by Technical Committee ISO/TC 96, *Cranes*, Subcommittee SC 3, *Selection of wire ropes*.

This fourth edition cancels and replaces the third edition (ISO 4309:2004), which has been technically revised. It also incorporates the Amendment ISO 4309:2004/Amd.1:2008.

© ISO 2010 – All rights reserved
Documents
Document Sharing Hub
Full document details: BS ISO 4309:2010

Introduction

A wire rope on a crane is regarded as an expendable component, requiring replacement when the results of inspection indicate that its condition has diminished to the point where further use would be unwise from a safety standpoint.

By following well-established principles, such as those detailed in this International Standard, along with any additional specific instructions provided by the manufacturer of the crane or hoist and/or by the manufacturer of the rope, this point should never be exceeded.

In addition to encompassing the guidance on storage, handling, installation and maintenance, which was first introduced in the last revision, this International Standard also provides discard criteria for those running ropes which are subjected to multi-layer spooling, where both field experience and testing demonstrate that deterioration is significantly greater at the cross-over zones on the drum, than at any other section of rope in the system.

It also provides more realistic discard criteria covering decrease in rope diameter and corrosion, and gives one method for assessing the combined effect of deterioration at any position in the rope.

When correctly applied, the discard criteria given in this International Standard are aimed at retaining an adequate safety margin. Failure to recognize them can be extremely harmful, dangerous and damaging.

To assist those who are responsible for “care and maintenance” as distinct from those who are responsible for “inspection and discard”, the procedures are conveniently separated.

© ISO 2010 – All rights reserved

Documents
Document Sharing Hub
Full document details: BS ISO 4309:2010

Documents
Document Sharing Hub

INTERNATIONAL STANDARD ISO 4309:2010(E)

Cranes — Wire ropes — Care and maintenance, inspection and discard

1 Scope

This International Standard establishes general principles for the care and maintenance, and inspection and discard of steel wire ropes used on cranes and hoists.

This International Standard is applicable to those ropes used on the following types of cranes, the majority of which are defined in ISO 4306-1:

a) cable and portal cable cranes;

b) cantilever cranes (pillar jib, wall or walking);

c) deck cranes;

d) derrick and guy derrick cranes;

e) derrick cranes with rigid bracing;

f) floating cranes;

g) mobile cranes;

h) overhead travelling cranes;

i) portal or semi-portal bridge cranes;

j) portal or semi-portal cranes;

k) railway cranes;

l) tower cranes;

m) offshore cranes, i.e. cranes mounted on a fixed structure supported by the sea bed or on a floating unit supported by buoyancy forces.

This International Standard applies to rope on cranes used for hook, grabbing, magnet, ladle, excavator or stacking duties, whether operated manually, electrically or hydraulically.

This International Standard also applies to rope used on hoists and hoist blocks.

In view of the fact that the exclusive use of synthetic sheaves or metal sheaves incorporating synthetic linings is not recommended when single-layer spooling at the drum, due to the inevitability of wire breaks occurring internally in large numbers before there is any visible evidence of any wire breaks or signs of substantial wear on the periphery of the rope, no discard criteria are given for this combination.

© ISO 2010 – All rights reserved

Documents
Document Sharing Hub
Full document details: BS ISO 4309:2010

2 Normative references

The following referenced documents are indispensable for the application of this document. For dated references, only the edition cited applies. For undated references, the latest edition of the referenced document (including any amendments) applies.

ISO 17893, *Steel wire ropes — Vocabulary, designation and classification*

3 Terms and definitions

For the purposes of this document, the terms and definitions given in ISO 17893 and the following apply.

3.1
nominal diameter
d
diameter by which the rope is designated

3.2
measured diameter
actual diameter
d_m
average of two measurements, taken at right angles to one another, of the diameter that circumscribes the rope cross-section

3.3
reference diameter
d_{ref}
measured diameter of a section of rope that is not subject to bending, taken directly after the rope has been broken in

NOTE This diameter is used as the baseline for uniform decrease in diameter.

3.4
cross-over zone
that portion of rope coincident with a crossing over of one wrap by another as the rope traverses the drum or rises from one layer to the next at the drum flange

3.5
wrap
one revolution of rope around a drum

3.6
reel
flanged spool on which rope is wound for shipment or storage

3.7
wire rope periodic inspection
in-depth visual inspection of the rope plus measurement of the rope and, if practicable, an assessment of its internal condition

NOTE This is sometimes referred to as a “thorough examination”.

3.8
competent person
⟨wire rope inspection⟩ person having such knowledge and experience of wire ropes on cranes and hoists as is necessary for that person to assess the condition of the rope, make a judgement as to whether it may remain in service and stipulate the maximum time interval between inspections

© ISO 2010 – All rights reserved
Documents
Document Sharing Hub
Full document details: BS ISO 4309:2010

3.9
valley wire break
wire break that occurs at the inter-strand contact point or valley area between two outer strands

NOTE Outer wire breaks that also occur within the rope anywhere between one valley area and the next, including any strand-core breaks, may also be regarded as valley wire breaks.

3.10
severity rating
amount of deterioration expressed as a per cent towards discard

NOTE The rating may relate to either an individual mode of deterioration, e.g. broken wires or decrease in diameter, or the combined effect of more than one mode of deterioration, e.g. broken wires and decrease in diameter.

4 Care and maintenance

4.1 General

In the absence of any instructions provided by the manufacturer of the crane in his manual and/or any provided by the manufacturer or supplier of the rope, the general principles given in 4.2 to 4.7 shall be followed.

4.2 Rope replacement

Unless an alternative rope has been approved of by the crane manufacturer, rope manufacturer or other competent person, only one of the correct length, diameter, construction, type and direction of lay and strength (i.e. minimum breaking force), as specified by the crane manufacturer, shall be installed on the crane. A record of the rope change shall be placed on file.

In the case of larger diameter rotation-resistant ropes, it may be necessary to apply additional means of securing the rope ends, e.g. through the use of steel straps, particularly when preparing samples for test.

If the length of rope required for use is to be cut from a longer length, such as a bulk manufactured reel of rope, servings shall be applied at both sides of the intended cutting point to prevent the rope from unlaying (i.e. unravelling) after the cut has been made.

Figure 1 is an example of how a single-layer rope should be served before cutting. For rotation-resistant and parallel-closed ropes, multiple length servings may be necessary. Ropes that are only lightly preformed are more likely to unlay (i.e. unravel) after cutting, if inadequate or insufficient servings are applied.

NOTE Serving is sometimes referred to as “seizing”.

Unless an alternative rope termination has been approved of by the crane manufacturer, rope manufacturer or other competent person, only one of a type, as specified by the crane manufacturer in his manual, shall be used to attach a rope to a drum, hook block or anchor point on the machinery structure.

© ISO 2010 – All rights reserved

Documents
Document Sharing Hub
Full document details: BS ISO 4309:2010

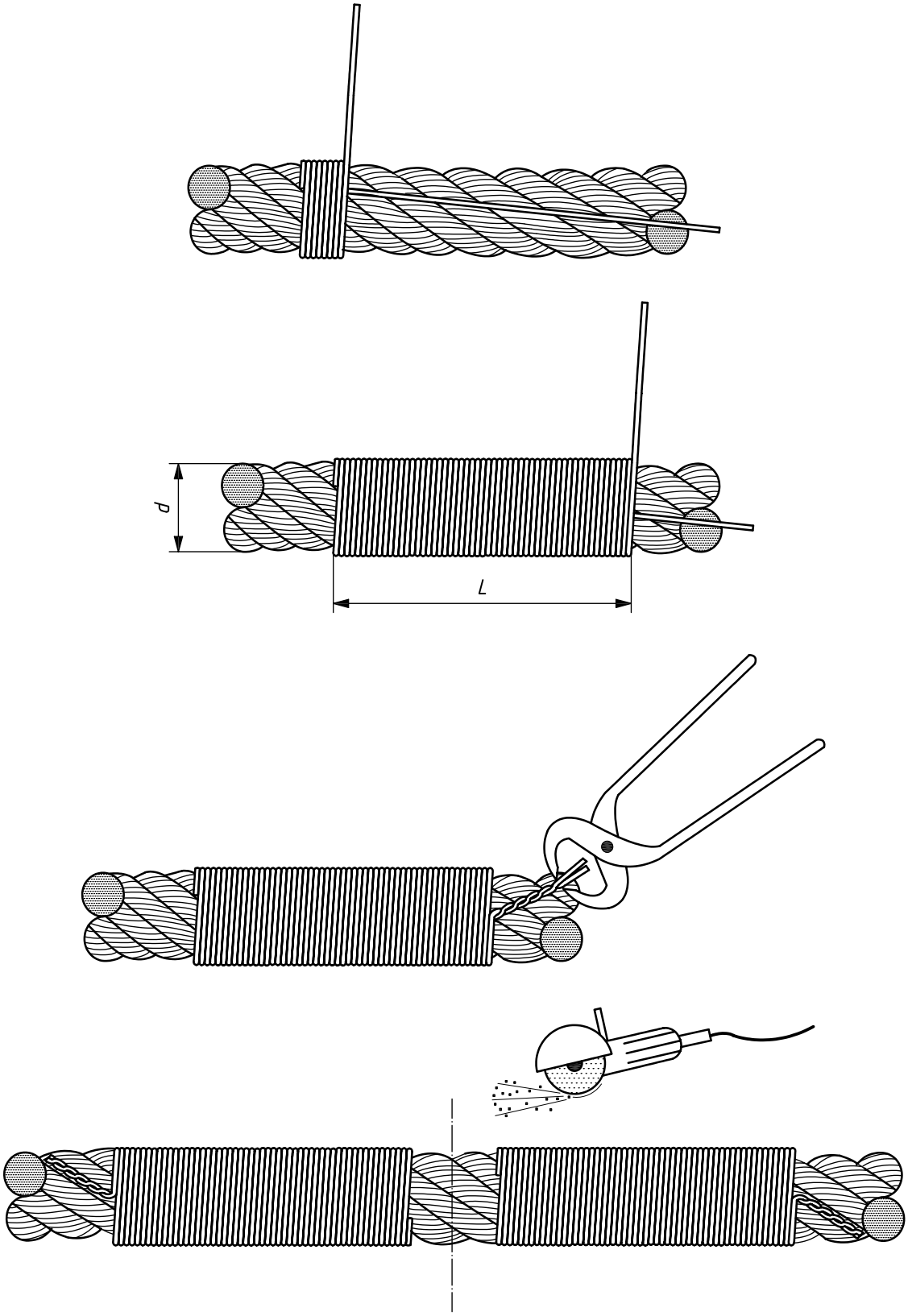

L = 2d minimum

Figure 1 — Application of serving prior to cutting of single-layer type rope

© ISO 2010 – All rights reserved
Documents
Document Sharing Hub
Full document details: BS ISO 4309:2010

4.3 Offloading and storing the rope

To avoid accidents and/or damage to the rope itself, ropes should be offloaded with care.

Reels or coils of rope shall not be dropped, neither shall they be struck by a metal hook or fork of a lift truck or any other external force that could damage or deform the rope.

Ropes should be stored in a cool, dry building and should not be allowed to be in contact with the floor. They should not be stored where they are likely to be affected by chemicals, chemical fumes, steam or other corrosive agents.

If outdoor storage cannot be avoided, ropes should be covered so that moisture cannot induce corrosion.

Ropes in storage shall be checked periodically for any signs of deterioration such as surface corrosion and, if deemed necessary by a competent person, dressed with a suitable preservative or lubricant which is compatible with the rope manufacturing lubricant.

In warm environments, the reel shall be periodically rotated one half-turn to prevent drainage of lubricant from the rope.

4.4 Condition of the rope prior to installation

Before installing the rope, and preferably on receipt, the rope and its certificate should be checked to ensure that the rope is in accordance with that ordered.

The strength of the rope to be installed shall not be lower than that specified by the crane manufacturer.

The diameter of the new rope shall be measured with the rope under no tension and the value recorded.

Check the condition of all sheave and drum grooves to ensure that they are capable of accepting the size of the new rope, do not contain any irregularities, such as corrugations, and have sufficient remaining thickness to safely support the rope.

For optimal performance, the effective sheave groove diameter should be larger than the nominal rope diameter by about 5 % to 10 %, and ideally, at least 1 % greater than the actual diameter of the new rope.

4.5 Installing the rope

When uncoiling and/or installing a wire rope, every precaution shall be taken to avoid inducing turn into, or out of, the rope. Allowing this to occur can result in the formation of loops, kinks or bends in the rope, rendering it unfit for use.

In order to prevent any of these developing, the rope should be paid out in a straight line with a minimum of slack being allowed to occur (see Figure 2).

Rope supplied in a coil should be placed on a turntable and paid out straight; however, where the coiled length is short, the outer rope end may be made free and the remainder of the rope rolled along the ground [see Figure 2 a)].

A rope shall never be paid out by throwing off wraps when the coil or reel is flat on the ground or by rolling the reel along the ground (see Figure 3).

For those lengths of rope supplied on a reel, place the supply reel and its supporting stand or cradle as far away from the crane or hoist as possible, in order to limit any fleet angle effects to an absolute minimum, thus avoiding any undesirable rotational effects.

Protect the rope from any potential ingress or grit or other contaminants by running it on suitable matting (e.g. used conveyor belting), rather than allowing it to run directly on the ground.

© ISO 2010 – All rights reserved

Documents
Document Sharing Hub
Full document details: BS ISO 4309:2010

Be aware that a revolving reel of rope can have a high inertia, in which case it needs to be controlled in order to slowly pay out the rope. For smaller reels, this is usually achieved by employing a single brake (see Figure 4). Larger reels have significant inertia once they start to revolve and might need to be substantially braked.

As far as practically possible, ensure that the rope always bends in the same direction during installation, i.e. pay out the rope from the top of the supply reel to the top of the drum on the crane or hoist (referred to as “top to top”), or from the underneath of the supply reel to the underneath of the drum on the crane or hoist (referred to as “bottom to bottom”). For an example of “bottom to bottom”, see Figure 4.

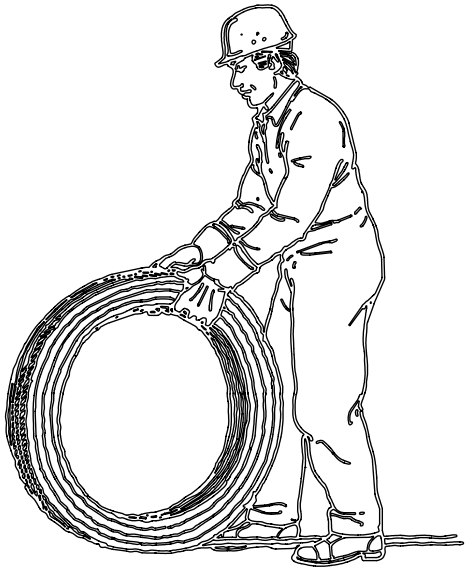

a) From a coil

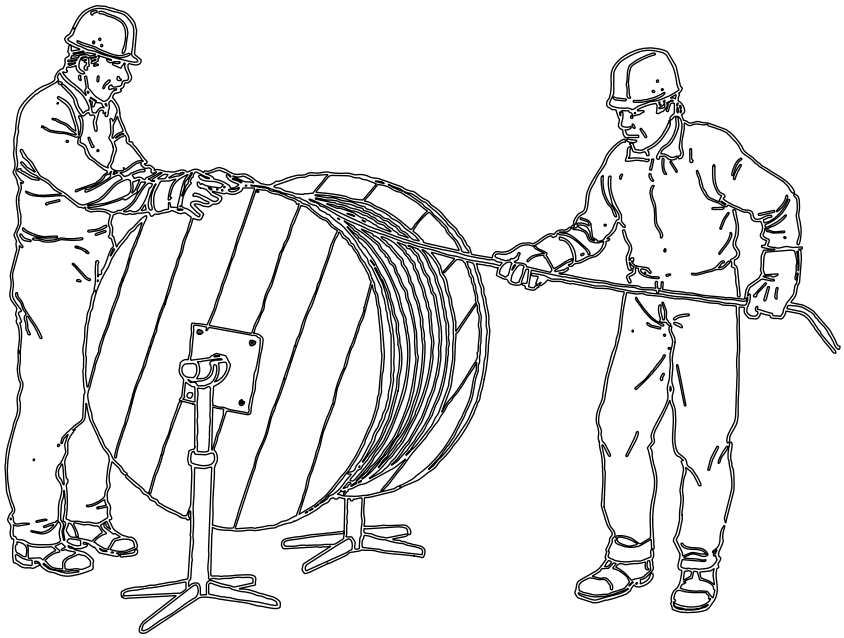

b) From a reel

Figure 2 — Correct procedures for uncoiling a wire rope

© ISO 2010 – All rights reserved
Documents
Document Sharing Hub
Full document details: BS ISO 4309:2010

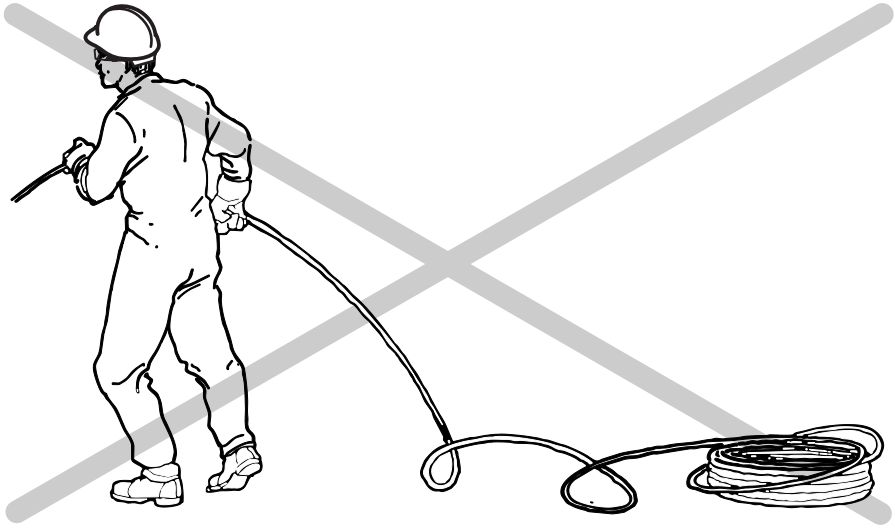

a) From a coil

b) From a reel

Figure 3 — Incorrect procedures for uncoiling a wire rope (*continued*)

© ISO 2010 – All rights reserved

Documents
Document Sharing Hub
Full document details: BS ISO 4309:2010

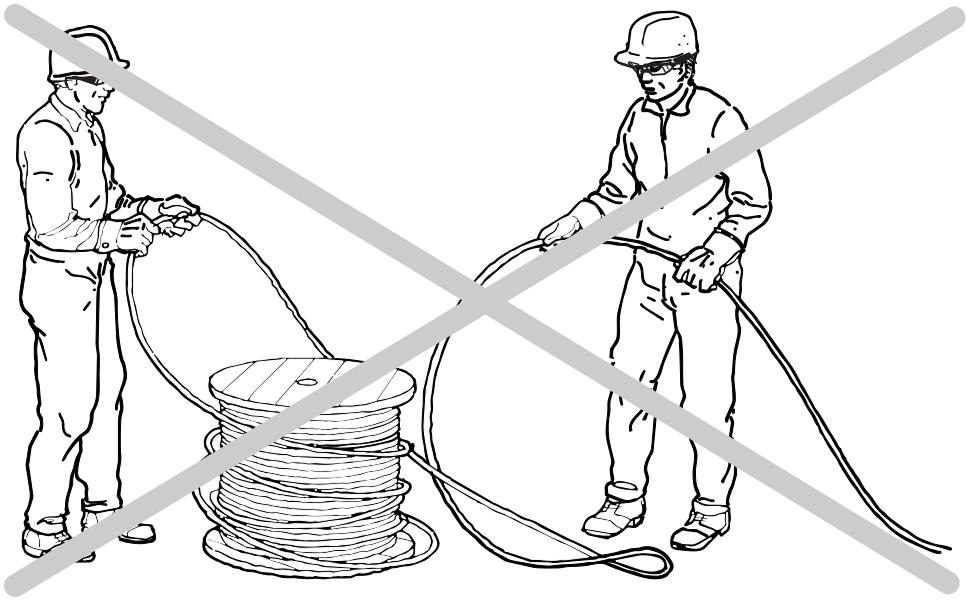

c) From the reel

Figure 3 — Incorrect procedures for uncoiling a wire rope

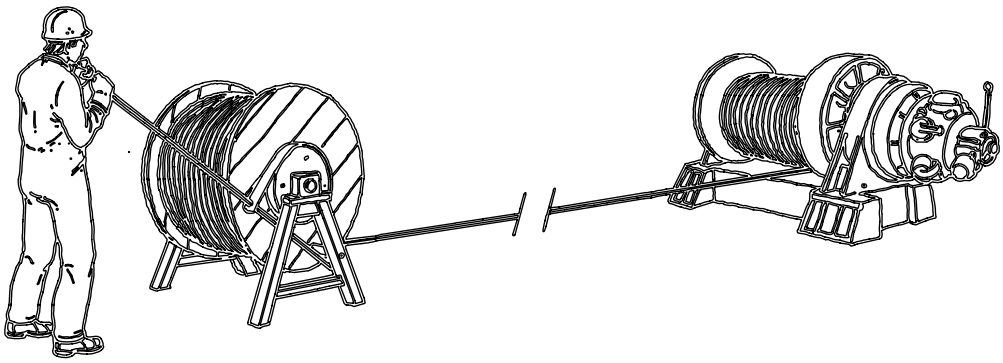

Figure 4 — Example of transfer of wire rope from bottom of reel to bottom of drum with control of rope tension

For those ropes that are subjected to multi-layer spooling, apply a back-tension to the rope during installation that is equivalent to about 2 1/2 % to 5 % of the minimum breaking force of the rope. This helps to ensure that the rope on the bottom layer is tightly wound, forming a firm base for succeeding layers.

Follow the crane manufacturer's instructions for the securing of the ends of the rope at the drum and outboard anchorages.

Protect the rope from rubbing against any part of the crane or hoist during installation.

4.6 Running-in the new rope

Before bringing the rope into full operation on the crane, the user shall ensure that all limiting and indicating devices associated with the operation of the crane are correctly functioning.

In order to allow the components of the rope to better adjust to the normal operating conditions, the user shall operate the crane at reduced speed and loading [i.e. down to 10 % of the Working Load Limit (WLL)] for a number of operational cycles.

© ISO 2010 – All rights reserved
Documents
Document Sharing Hub
Full document details: BS ISO 4309:2010

4.7 Maintaining the rope

Maintenance of the rope shall be carried out relative to the type of crane, its frequency of use, the environmental conditions and the type of rope.

During the life of the rope, and before it shows any signs of dryness or corrosion, particularly over those lengths which travel through sheaves and enter and exit the drum and those sections which are coincident with a compensating sheave, the rope shall be dressed from time to time, as determined by a competent person. In some cases, it may be necessary to clean the rope before applying the dressing in order for it to be effective.

The rope dressing shall be compatible with the original lubricant applied by the rope manufacturer and shall have penetrating characteristics. If the type of rope dressing is not identified in the crane manual, the user shall seek guidance from the supplier of the rope or the wire rope manufacturer.

A shorter rope life is likely to result from a lack of maintenance, particularly if the crane or hoist is used in a corrosive environment or, for whatever reason, no rope dressing can be applied. In such cases, the period between inspections shall be reduced accordingly.

In order to avoid any localized deterioration, which might otherwise originate from a broken wire which protrudes excessively from the rope and overlies others when that portion travels through a sheave, it may be removed by gripping the protruding end(s) and bending the wire backwards and forwards (see Figure 5), until it eventually breaks (which is, invariably, in the valley position between the strands). When a broken wire is removed from the rope as part of a maintenance exercise, its location should be recorded for the information of the rope inspector. If such action is taken, this should be counted as one broken wire and taken into account when assessing the condition of the rope in relation to the discard criteria for broken wires.

When broken wires are evident close to or at the termination, but the rope is unaffected elsewhere along its length, the rope may be shortened and the terminal fitting may be re-fitted. Before doing so, the remaining length of wire rope should be checked to ensure that the required minimum number of wraps would remain on the drum with the crane at its most extreme operating limit.

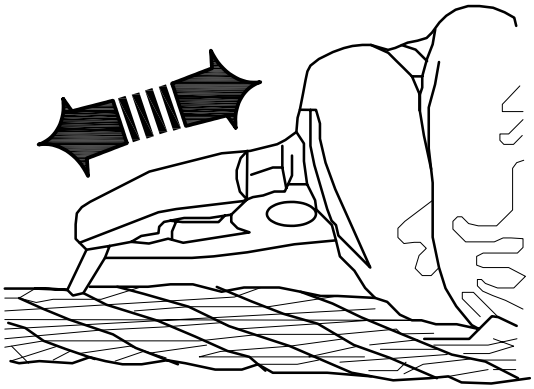

Figure 5 — Removal of protruding wire

4.8 Maintenance of rope-related parts of the crane

In addition to following the instructions contained in the crane manual, winding drums and sheaves should be periodically checked to ensure that they rotate freely in their bearings.

Stiff or jammed sheaves or rollers wear heavily and unevenly, causing severe abrasion of the rope. Ineffective compensating sheaves can give rise to unequal loading in the rope reeving.

© ISO 2010 – All rights reserved

Documents
Document Sharing Hub
Full document details: BS ISO 4309:2010

5 Inspection

5.1 General

In the absence of any instructions provided by the manufacturer of the crane in his manual and/or any provided by the manufacturer or supplier of the rope, the general principles for inspection given in 5.2 to 5.5 shall be followed.

5.2 Daily visual inspection

At least the intended working section of rope for that particular day shall be observed with the objective of detecting any general deterioration or mechanical damage. This shall include the points of attachment of the rope to the crane (see Figure A.2).

The rope should also be checked to ensure that it is sitting correctly on the drum and over the sheave(s) and has not been displaced from its normal operating position.

Any appreciable change in condition shall be reported and the rope examined by a competent person in accordance with 5.3.

If, at any time, the rigging arrangement is modified, such as when the crane has been moved to a new site and re-rigged, the rope shall be subjected to a visual inspection as described in this subclause.

NOTE The driver/operator of the crane can be appointed to carry out daily checks to the extent that he is sufficiently trained and considered competent to carry out this action.

5.3 Periodic inspection

5.3.1 General

Periodic inspections shall be carried out by a competent person.

The information gained from a periodic inspection is used to assist in deciding whether a crane rope

a) can safely remain in service and by which latest time it shall undergo its next periodic inspection, or

b) needs to be withdrawn immediately or within a specified timeframe.

Through an appropriate assessment method, i.e. by counting, visual means and/or measurement, the severity of deterioration shall be assessed and expressed either as a percentage (e.g. 20 %, 40 %, 60 %, 80 % or 100 %) of the particular individual discard criteria or in words (e.g. slight, medium, high, very high or discard).

Any damage that might have occurred to the rope prior to it being run in and entering service shall be assessed by a competent person and observations shall be recorded.

A list of the more common modes of deterioration and whether each one can be readily quantified (i.e. by counting or measuring) or has to be subjectively assessed (i.e. by visual means) by the competent person is given in Table 1.

© ISO 2010 – All rights reserved
Documents
Document Sharing Hub
Full document details: BS ISO 4309:2010

Table 1 — Modes of deterioration and assessment methods

Mode of deterioration	Assessment method
Number of visible broken wires (including those which are randomly distributed, localized groupings, valley wire breaks and those that are at, or in the vicinity of, the termination)	By counting
Decrease in rope diameter (resulting from external wear/abrasion, internal wear and core deterioration)	By measurement
Fracture of strand(s)	Visual
Corrosion (external, internal and fretting)	Visual
Deformation	Visual and by measurement (wave only)
Mechanical damage	Visual
Heat damage (including electric arcing)	Visual

For some examples of typical modes of deterioration, see Annex B.

5.3.2 Frequency

The frequency of the periodic inspection shall be determined by the competent person, who shall take account of at least the following:

a) the statutory requirements covering the application in the country of use;

b) the type of crane and the environmental conditions in which it operates;

c) the classification group of the mechanism;

d) the results of previous inspection(s);

e) experience gained from inspecting ropes on comparable cranes;

f) the length of time the rope has been in service;

g) the frequency of use.

NOTE 1 The competent person can find it prudent to initiate or recommend more frequent periodic inspections than those required by legislation. This decision can be influenced by the type and frequency of operation. Also, depending on the condition of the rope at any time and/or whether there is any change in circumstances, such as an incident or change in operating conditions, the competent person can deem it necessary to reduce or recommend the reduction of the interval between periodic inspections.

NOTE 2 Generally, ropes develop broken wires at a greater rate later on in the life of a rope than in the early stages.

NOTE 3 For two examples of rate of increase in broken wires over time, see Figure 6.

© ISO 2010 – All rights reserved

Documents
Document Sharing Hub
Full document details: BS ISO 4309:2010

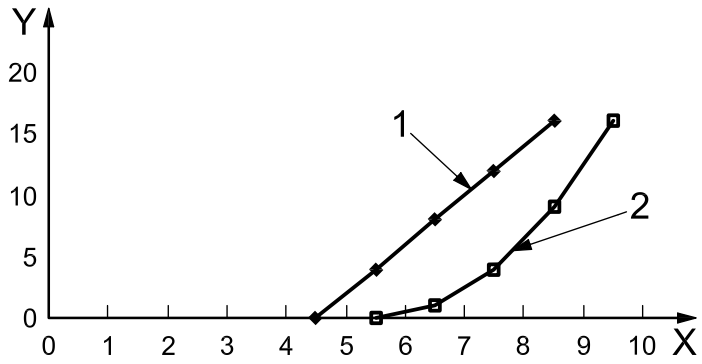

Key

X time, in cycles

Y number of randomly distributed broken wires per unit length

1 rope 1

2 rope 2

Figure 6 — Examples of rate of increase in broken wires

5.3.3 Extent of inspection

Each rope shall be inspected along its entire length.

However, in the case of a long length, and at the discretion of the competent person, the working length plus at least five wraps on the drum may be inspected. In such a case, and where a greater working length is subsequently foreseen after the previous inspection and prior to the next one, that additional length should also be inspected before the additional length of rope is used.

Particular care, however, shall be taken at the following critical areas and locations:

a) drum anchorage;

b) any section at, and in the vicinity of, a rope termination;

c) any section that travels through one or more sheaves;

d) any section that travels through a safe load indicator which incorporates sheaves;

e) any section that travels through the hook block;

f) in the case of cranes performing a repetitive operation, any part of the rope that lies over a sheave while the crane is in a loaded condition;

g) that part of the rope which lies over a compensating sheave;

h) any section that travels through a spooling device;

i) those sections that spool on the drum, particularly cross-over zones that are associated with multi-layer spooling;

j) any section that is subjected to abrasion by external features (e.g. hatch combings);

k) any part of rope that is exposed to heat.

NOTE For areas requiring particular close inspection, see Annex A.

© ISO 2010 – All rights reserved
Documents
Document Sharing Hub
Full document details: BS ISO 4309:2010