BS ISO 4359:2022

BSI Standards Publication

Flow measurement structures — Rectangular, trapezoidal and U-shaped flumes

Documents
Document Sharing Hub

Full document details: BS ISO 4359:2022

National foreword

This British Standard is the UK implementation of ISO 4359:2022. It supersedes BS ISO 4359:2013+A1:2017, which is withdrawn.

The UK participation in its preparation was entrusted to Technical Committee CPI/113/2, Flow measurement structures.

A list of organizations represented on this committee can be obtained on request to its committee manager.

Contractual and legal considerations

This publication has been prepared in good faith, however no representation, warranty, assurance or undertaking (express or implied) is or will be made, and no responsibility or liability is or will be accepted by BSI in relation to the adequacy, accuracy, completeness or reasonableness of this publication. All and any such responsibility and liability is expressly disclaimed to the full extent permitted by the law.

This publication is provided as is, and is to be used at the recipient's own risk.

The recipient is advised to consider seeking professional guidance with respect to its use of this publication.

This publication is not intended to constitute a contract. Users are responsible for its correct application.

© The British Standards Institution 2023
Published by BSI Standards Limited 2023

ISBN 978 0 539 19430 2

ICS 17.120.20

Compliance with a British Standard cannot confer immunity from legal obligations.

This British Standard was published under the authority of the Standards Policy and Strategy Committee on 31 January 2023.

Amendments/corrigenda issued since publication

Date	Text affected

Documents
Document Sharing Hub

Full document details: BS ISO 4359:2022

INTERNATIONAL STANDARD

ISO 4359

Third edition
2022-12

Flow measurement structures — Rectangular, trapezoidal and U-shaped flumes

Structures de mesure du débit — Canaux jaugeurs à col rectangulaire, à col trapézoïdal et à col en U

Reference number
ISO 4359:2022(E)

Documents
Document Sharing Hub

© ISO 2022

Full document details: BS ISO 4359:2022

COPYRIGHT PROTECTED DOCUMENT

© ISO 2022

All rights reserved. Unless otherwise specified, or required in the context of its implementation, no part of this publication may be reproduced or utilized otherwise in any form or by any means, electronic or mechanical, including photocopying, or posting on the internet or an intranet, without prior written permission. Permission can be requested from either ISO at the address below or ISO's member body in the country of the requester.

ISO copyright office
CP 401 • Ch. de Blandonnet 8
CH-1214 Vernier, Geneva
Phone: +41 22 749 01 11
Email: copyright@iso.org
Website: www.iso.org

Published in Switzerland

© ISO 2022 – All rights reserved

Documents
Document Sharing Hub

Full document details: BS ISO 4359:2022

Contents

Page

Foreword ..... **v**

1 Scope **1**

2 Normative references **1**

3 Terms and definitions **1**

4 Symbols **1**

5 Flume types and principles of operation **3**

6 Installation **7**
6.1 Selection of site 7
6.2 Installation conditions 9
6.2.1 General requirements 9
6.2.2 Flume structure 9
6.2.3 Approach channel 10
6.2.4 Downstream conditions 11

7 Maintenance **11**

8 Measurement of head **11**
8.1 General 11
8.2 Location of head measurement(s) 11
8.3 Gauge wells 12
8.4 Zero setting 12

9 General formulae for discharge **12**
9.1 Discharge based on critical flow in the flume throat 12
9.2 Discharge based on observed upstream head 14
9.3 Calculation of stage–discharge relationships 26
9.4 Approach velocity and coefficient of velocity 27
9.5 Selection of flume size and shape 29

10 Rectangular-throated flume **29**
10.1 Description 29
10.2 Location of head measurement section 30
10.3 Provision for modular flow 30
10.4 Evaluation of discharge for a given observed upstream head 30
10.5 Computation of stage–discharge relationship 34
10.6 Limits of application 34

11 Trapezoidal-throated flumes **35**
11.1 Description 35
11.2 Location of head measurement section 35
11.3 Provision for modular flow 36
11.4 Evaluation of discharge — Coefficient method 36
11.5 Computation of stage–discharge relationship 39
11.6 Limits of application 41

12 U-throated (round-bottomed) flumes **42**
12.1 Description 42
12.2 Location of head measurement section 43
12.3 Provision for modular flow 43
12.4 Evaluation of discharge — Coefficient method 44
12.5 Computation of stage–discharge relationship 48
12.6 Limits of application 50

13 Uncertainties of flow measurement **51**
13.1 General 51
13.2 Combining measurement uncertainties 52

AVA Documents
Document Sharing Hub

© ISO 2022 – All rights reserved

Full document details: BS ISO 4359:2022

13.3 Percentage uncertainty of discharge coefficient $u^*(C)$ for critical-depth flumes 54
13.4 Uncertainty budget 55

14 Example of uncertainty calculations 55
14.1 General 55
14.2 Characteristics — Gauging structure 55
14.3 Characteristics — Discharge calculation 56
14.4 Characteristics — Discharge coefficient 56
14.5 Characteristics — Gauged head instrumentation 56
14.6 Characteristics — Throat width 57
14.7 Overall uncertainty in discharge 57

Annex A (informative) **Simplified head discharge relationships for flumes 59**

Annex B (informative) **Introduction to measurement uncertainty 64**

Annex C (informative) **Sample measurement performance for use in hydrometric worked examples 73**

Annex D (informative) **Spreadsheets for use with this document 76**

Bibliography 79

© ISO 2022 – All rights reserved

Documents
Document Sharing Hub
Full document details: BS ISO 4359:2022

Foreword

ISO (the International Organization for Standardization) is a worldwide federation of national standards bodies (ISO member bodies). The work of preparing International Standards is normally carried out through ISO technical committees. Each member body interested in a subject for which a technical committee has been established has the right to be represented on that committee. International organizations, governmental and non-governmental, in liaison with ISO, also take part in the work. ISO collaborates closely with the International Electrotechnical Commission (IEC) on all matters of electrotechnical standardization.

The procedures used to develop this document and those intended for its further maintenance are described in the ISO/IEC Directives, Part 1. In particular, the different approval criteria needed for the different types of ISO documents should be noted. This document was drafted in accordance with the editorial rules of the ISO/IEC Directives, Part 2 (see www.iso.org/directives).

Attention is drawn to the possibility that some of the elements of this document may be the subject of patent rights. ISO shall not be held responsible for identifying any or all such patent rights. Details of any patent rights identified during the development of the document will be in the Introduction and/or on the ISO list of patent declarations received (see www.iso.org/patents).

Any trade name used in this document is information given for the convenience of users and does not constitute an endorsement.

For an explanation of the voluntary nature of standards, the meaning of ISO specific terms and expressions related to conformity assessment, as well as information about ISO's adherence to the World Trade Organization (WTO) principles in the Technical Barriers to Trade (TBT), see www.iso.org/iso/foreword.html.

This document was prepared by Technical Committee ISO/TC 113, *Hydrometry*, Subcommittee SC 2, *Flow measurement structures*.

This third edition cancels and replaces the second edition (ISO 4359:2013), which has been technically revised. It also incorporates the Amendment ISO 4359:2013/Amd.1:2017.

The main changes are as follows:

— 6.1.2 a) and 6.2.3.2 b) have been revised with respect to the flume approach conditions.

— Errors that were introduced in Amendment ISO 4359:2013/Amd.1:2017 have been corrected.

— An acknowledgement has been added that some of the specified tolerances can be difficult to achieve in some installations.

— The spreadsheets have been revised to provide further advice if parameters are outside the applicability range of the curve-fitting formulae for the relative boundary layer thickness (δ^*/L).

— The first edition of this document (ISO 4359:1983) had an additional limitation requiring that the gauged head, h, be not more than 2 m. However, there is no technical justification for this restriction, so it does not appear in the second and third editions of this document.

— In 11.4.7 and 12.4.7, although the relationship of C_s with mH_e/b_e varies very slightly with flume geometry and the value of the boundary layer displacement thickness, this variation was disregarded when applying the coefficient method in the first edition of this document, as a single graphical relationship was provided for trapezoidal flumes. This approximation has been remedied in the second and third editions of this document.

Any feedback or questions on this document should be directed to the user's national standards body. A complete listing of these bodies can be found at www.iso.org/members.html.

© ISO 2022 – All rights reserved

Documents
Document Sharing Hub
Full document details: BS ISO 4359:2022

Documents
Document Sharing Hub

Flow measurement structures — Rectangular, trapezoidal and U-shaped flumes

1 Scope

This document specifies methods for the measurement of flow in rivers and artificial channels under steady or slowly varying flow conditions, using certain types of critical-depth flumes (also known as "standing-wave flumes"). A wide variety of flumes has been developed, but only those critical-depth flumes which have received general acceptance after adequate research and field testing, and which therefore do not require *in situ* calibration, are considered herein.

The flow conditions considered are uniquely dependent on the upstream head, i.e. subcritical flow must exist upstream of the flume, after which the flow accelerates through the contraction and passes through its critical depth (see Figure 1). The water level downstream of the structure is low enough to have no influence upon its performance.

This document is applicable to three commonly used types of flumes, covering a wide range of applications, namely rectangular-throated, trapezoidal-throated and U-throated. The hydraulic theory behind this document was presented in Reference [7].

This document is not applicable to a form of flume referred to in the literature (sometimes called a "Venturi" flume) in which the flow remains subcritical throughout.

NOTE The Venturi form of flume is based on the same principle as a Venturi meter used within a closed conduit system and relies upon gauging the head at two locations and the application of Bernoulli's energy formula.

2 Normative references

The following documents are referred to in the text in such a way that some or all of their content constitutes requirements of this document. For dated references, only the edition cited applies. For undated references, the latest edition of the referenced document (including any amendments) applies.

ISO 772, *Hydrometry — Vocabulary and symbols*

3 Terms and definitions

For the purposes of this document, the terms and definitions given in ISO 772 apply.

ISO and IEC maintain terminology databases for use in standardization at the following addresses:

— ISO Online browsing platform: available at https://www.iso.org/obp

— IEC Electropedia: available at https://www.electropedia.org/

4 Symbols

Symbol	Quantity	Unit of measurement
A	area of cross-section of flow	m^2
B	width of approach channel (width at bed if trapezoidal)	m
b	width of flume throat (width at bed if trapezoidal)	m
C	overall coefficient of discharge (rectangular flumes)	non-dimensional

AVA Documents Document Sharing Hub

© ISO 2022 – All rights reserved

Full document details: BS ISO 4359:2022

Symbol	Quantity	Unit of measurement
C_c	coefficient of contraction	non-dimensional
C_D	coefficient of discharge	non-dimensional
C_s	shape coefficient for trapezoidal-throated and U-throated flumes	non-dimensional
C_v	coefficient allowing for the effect of approach velocity	non-dimensional
D	diameter of base of U-throated flume	m
d	depth of flow	m
E	specific energy (relative to local invert)	m
Fr	Froude number	non-dimensional
g	gravitational acceleration	m/s^2
H	total head (relative to a specified datum, such as a flume invert)	m
H_*	correction to the total head	m
h	gauged head	m
k_s	equivalent sand roughness of surface, after Nikuradse	mm
L	length of prismatic section of the contraction at a flume	m
L_1	length of bellmouth entrance	m
L_2	length of slope (if present) between throat and downstream stilling basin or channel floor	m
L_3	length of stilling basin (if present)	m
m	side-slope (m horizontal to 1 vertical)	non-dimensional
n	number of measurements in series	non-dimensional
P	wetted perimeter of flow cross-section	m
p	height of flume invert above the invert of the approach channel	m
Q	Discharge	m^3/s
R	instrument range in uncertainties evaluation	non-dimensional
Re	Reynolds number	non-dimensional
r_p	radius of hump	m
R_1	radius of bellmouth entrance	m
S	standard deviation	—
$\bar{S}$	standard error of the mean	—
$u(E)$	relative datum uncertainty in uncertainties evaluation	m
$u^*(Q)_{68}$	overall percentage uncertainty in the determination of discharge expressed as a percentage standard deviation at 68 % confidence limits	non-dimensional
$u^*(b)$	percentage uncertainty in b (or D)	non-dimensional
$u^*(C)$	percentage uncertainty in the combined coefficient value	non-dimensional
$u^*(h)$	percentage uncertainty in h	non-dimensional
$u^*(m)$	percentage uncertainty in m	non-dimensional
$\bar{V}$	average velocity through a cross-section, defined by Q/A	m/s
w	water surface width	m
α	kinetic energy correction coefficient (taking into account non-uniformity of velocity distribution)	non-dimensional
β	coefficient dependent on mean curvature of stream lines	non-dimensional
γ, φ, ψ	coefficients in the uncertainty computation	—
δ^*	boundary layer displacement thickness	m
η	a numerical coefficient related to the sideslope angle in trapezoidal flumes	non-dimensional
ν	kinematic viscosity of the fluid	m^2/s

© ISO 2022 – All rights reserved
AVA Documents Document Sharing Hub
Full document details: BS ISO 4359:2022

Symbol	Quantity	Unit of measurement
θ	semi-angle subtended at the centre of curvature of the invert of a U-throated flume between the water surface and the vertical	radians
σ	semi-angle subtended at the centre of curvature of the invert of a U-throated flume between the water surface and the horizontal	radians
Subscripts		
a	values in approach channel	
c	values at critical flow	
d	values downstream of the flume	
e	effective values after making allowance for boundary layer effects	
1	values assuming an ideal frictionless fluid	
M	maximum value	

5 Flume types and principles of operation

5.1 The flumes covered by this document are often known as “long-throated” or “critical-depth” flumes and rely fundamentally on the occurrence of critical flow in the flume throat. When this occurs, there is a unique relationship, for a given flume geometry, between the upstream head and the discharge, that is independent of the conditions downstream of the flume throat. Figure 1 shows a simplified sketch of where the critical depth typically occurs in a critical depth flume and the consequent water surface profile through a long-throated trapezoidal flume, together with key hydraulic and geometrical parameters. Typical field installations of the three types of flumes covered by this document are shown in Figure 2. The three types are:

a) rectangular-throated;

b) trapezoidal-throated;

c) U-throated, i.e. round-bottomed.

Site conditions are important and Figure 3 shows acceptable velocity profiles in the approach channel.

© ISO 2022 – All rights reserved

Documents
Document Sharing Hub
Full document details: BS ISO 4359:2022

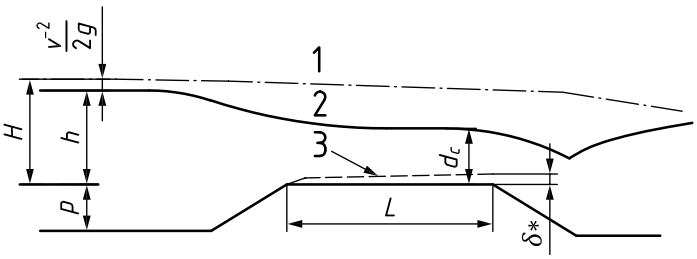

a) Longitudinal section

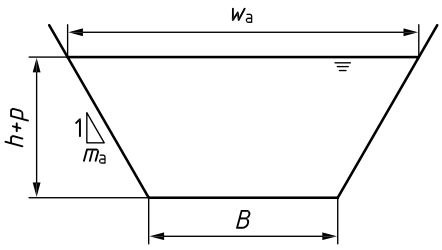

b) Section in approach channel upstream from throat

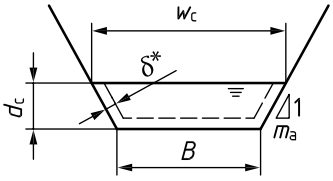

c) Section at downstream end of throat

Key

1 total energy line

2 typical flow profile

3 edge of boundary layer displacement thickness

δ^* has been exaggerated.

NOTE Adapted from Figure 8.1 in Reference [6].

Figure 1 — Trapezoidal-throated flume showing key geometrical parameters, water surface profile and development of boundary layer displacement thickness

© ISO 2022 – All rights reserved

Documents
Document Sharing Hub
Full document details: BS ISO 4359:2022

a) Rectangular-throated flume **b) Trapezoidal-throated flume** **c) U-throated flume**

Figure 2 — Examples of rectangular-throated, trapezoidal-throated and U-throated flumes

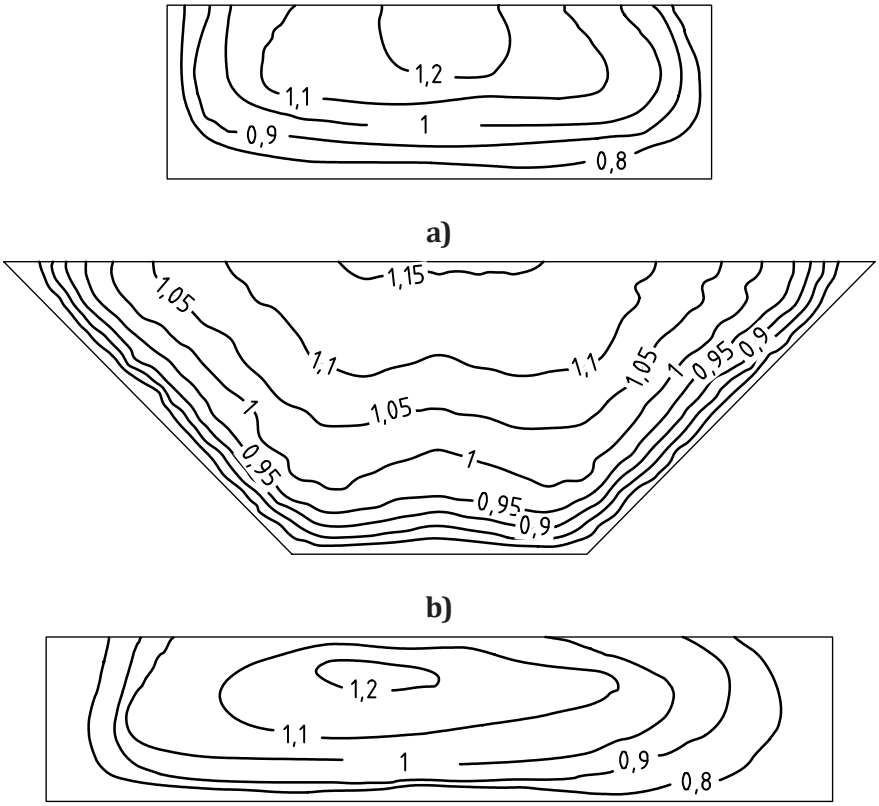

Figure 3 — Examples of typical dimensionless velocity distributions in approach channels

5.2 Because the flume design is based on critical flow, this document is largely based on fundamental hydraulic theory, without the need for the large-scale volumetric testing that has been used to derive the coefficients for other forms of flow measurement structure. In order to obtain critical flow within the throat of the flume, the following conditions shall be satisfied:

© ISO 2022 – All rights reserved

Documents
Document Sharing Hub
Full document details: BS ISO 4359:2022

a) The throat of the flume shall be long enough for the flow to be virtually parallel with the flume invert, so that hydrostatic pressure conditions occur at the control section.

b) The entrance to the flume throat shall be shaped so that there are virtually no energy losses between the point where the head is gauged and the point where critical flow occurs.

c) The flume throat shall constrict the channel severely enough to raise the energy level in the throat sufficiently high above the energy level downstream to ensure that the flume is "modular".

5.3 Figure 2 shows examples of flow in rectangular-throated, trapezoidal-throated and U-throated flumes. The choice of flume type from these three depends upon several factors, such as the range of discharge to be measured, the accuracy required, the head available and whether or not the flow carries sediment that is liable to accrete. It can be observed that, in comparison with weirs, flumes provide a lesser obstruction to the passage of sediment, so are less likely to cause significant accretion of sediment (which can affect the approach channel geometry at the flow gauging location). The graphs in Annex A provide a means of quickly comparing the idealized performance of a range of flume designs, to aid a preliminary choice of the size and form of flume needed to deliver the required discharge capacity and stage–discharge relationship.

5.4 The rectangular-throated flume is the simplest to construct. It generally proves necessary to raise the invert of the flume throat above the bed of the channel upstream, in order to generate a constriction that is sufficiently severe to allow low flows to be gauged. However, this can result in a regime of cyclic sediment accretion and erosion upstream, which would affect the accuracy and consistency of gauging.

5.5 The trapezoidal-throated flume is more appropriate where a wide range of discharge is to be measured with consistent accuracy. This shape of throat is also more likely to be suitable where it is desirable to produce a particular stage–discharge relationship. In some cases, it is not necessary to raise the invert of the throat above the approach channel invert when using a trapezoidal-throated flume, so reducing the risk of upstream sediment accretion.

5.6 The U-throated flume is useful for installation in a U-shaped channel or where the flow is from a circular-section conduit. It has found particular application in sewers and at sewage works.

5.7 The detailed theory for the critical-depth flume is given in Clauses 9 to 12, but is introduced here in simplified form, based on the assumption of a uniform velocity across the flow section and disregarding boundary layer effects. The basic discharge formula for a critical-depth flume can be derived from the general energy formula, as shown by Formula (1):

$$H = d + \frac{\bar{V}^2}{2g} = d + \frac{Q^2}{2gA^2} \tag{1}$$

where

H is the total head above the flume invert;

d is the depth of flow;

$\bar{V}$ is the average velocity through the section (= Q/A);

Q is the discharge;

A is the area of the flow cross-section;

g is the gravitational acceleration.

© ISO 2022 – All rights reserved
Documents
Document Sharing Hub
Full document details: BS ISO 4359:2022

By differentiating the energy in Formula (1) with respect to depth, it can be shown by Formula (2) that, for critical flow:

$$Q = \sqrt{\frac{gA_c^3}{w_c}} \tag{2}$$

where w is the water surface width and the subscript "c" refers to conditions at the critical-flow section.

Substituting Formula (2) into Formula (1) and disregarding any energy losses between the gauging section and the critical-flow section, Formula (3) is obtained:

$$H = d_c + \frac{A_c}{2w_c} \tag{3}$$

5.8 In general, Formulae (2) and (3) are solved alongside each other for successive values of depth d_c (with the corresponding values of area and surface width) to obtain the relationship between H and Q, but for the special case of a flume with a rectangular throat (see 9.2.2), they can be combined to produce the explicit relationship, as given by Formula (4):

$$Q = \frac{2}{3}\sqrt{\frac{2g}{3}}\, bH^{1,5} \tag{4}$$

5.9 This is readily recognizable as the same formula that applies (for an ideal fluid) for the flow over a round-nosed horizontal-crested weir. In order to extend the use of this formula, three additional coefficients may be introduced, resulting in a generalized formula for long-throated critical-depth flumes, as given by Formula (5):

$$Q = \frac{2}{3}\sqrt{\frac{2g}{3}}\, C_D C_s C_v\, b\, h^{1,5} \tag{5}$$

where

C_D is a discharge coefficient that takes account of the non-ideal fluid properties, in particular the effect of the boundary layer in the throat;

C_s is a shape coefficient, to allow for the effect of a non-rectangular flow section in the throat;

C_v is a velocity coefficient, to allow the upstream gauged head, h, to be used in place of the total head or specific energy, H.

5.10 Formulae for these coefficients are given in Clauses 9 to 12 and generally require an iterative approach to be adopted.

6 Installation

6.1 Selection of site

6.1.1 The flume shall be located in a straight section of channel, avoiding local obstructions, roughness or unevenness of the bed.

6.1.2 A preliminary study shall be made of the physical and hydraulic features of the proposed site, to check that it conforms (or can be constructed or modified so as to conform) to the requirements

© ISO 2022 – All rights reserved

Documents
Document Sharing Hub
Full document details: BS ISO 4359:2022

necessary for measurement of discharge by a flume. Particular attention should be paid to the following features in selecting the site:

a) The availability of a sufficient straight length of approach channel.

b) The acceptable degree of uniformity of the existing velocity distribution (see Figure 3).

c) The avoidance of a steep channel, the characteristics of which would induce supercritical flow.

d) The effects of any raised upstream water levels due to the measuring structure.

e) Conditions downstream, including such influences as tides, confluences with other streams, sluice gates, mill dams and other controlling features which can cause submerged flow.

f) The impermeability of the ground on which the structure is to be founded and the necessity for piling, grouting or other means of controlling seepage.

g) The necessity for floodbanks, to confine the maximum discharge to the channel.

h) The stability of the banks, and the necessity for trimming and/or revetment in natural channels.

i) The clearance of rocks or boulders from the bed of the approach channel.

j) Wind, which can have a considerable effect on the flow in a river, weir or flume, especially when these are wide and the head is small and when the prevailing wind is in a transverse direction (which would introduce a bias whose direction would depend on whether the gauge were at the windward or leeward side of the approach channel).

6.1.3 If the site does not possess the characteristics necessary for satisfactory measurement, the site shall be rejected unless suitable improvements are practicable.

6.1.4 If an inspection of the stream shows that the existing velocity distribution is reasonably uniform, then it may be assumed that the velocity distribution will remain satisfactory after the construction of the flume.

6.1.5 If the existing velocity distribution is markedly non-uniform and no other site for the flume is feasible, due consideration shall be given to checking the distribution after installation of the flume and to improving it if necessary.

6.1.6 Several methods are available for obtaining a more precise indication of irregular velocity distribution: velocity rods, floats or dye observations can be used in small channels, the latter being useful in checking conditions at the bottom of the channel. A complete and quantitative assessment of velocity distribution may be made by means of a current meter and other point velocity measurements.

NOTE Information about the use of current meters is given in ISO 748.

The user should confirm that the dye material used is acceptable for flow measurement purposes within a natural channel in the country of operation.

6.1.7 Figure 3 gives typical examples of velocity distributions in channels of varying shape that can be taken as acceptable for flow measurement purposes.

6.1.8 Flumes can act as obstacles to the movement of fish and other aquatic species. Care should therefore be taken to ensure that the installation of gauging structures such as flumes does not have a detrimental effect on the aquatic ecology where this can be an issue.

NOTE National or supranational legislation or regulations, such as the European Parliament EU Water Framework Directive (Directive 2000/60/EC), can apply to the gauging structure.

© ISO 2022 – All rights reserved
Documents
Document Sharing Hub
Full document details: BS ISO 4359:2022

Where it is possible that the movement of aquatic life can be compromised by the installation of a flow measurement structure, this should be reflected in the design. Alternatively, a fishpass in accordance with ISO 26906 should be installed.

6.1.9 Appropriate legislation should be identified before a site for a measuring weir is chosen.

6.2 Installation conditions

6.2.1 General requirements

6.2.1.1 The complete measuring installation consists of an approach channel, a measuring structure and a downstream channel. The conditions of each of these three components affect the overall accuracy of the measurements.

6.2.1.2 Installation requirements include features such as the surface finish of the flume, the cross-sectional shape of channel, the channel roughness and the influence of control devices upstream or downstream of the gauging structure.

6.2.1.3 The distribution and direction of velocity have an important influence on the performance of the flume, these factors being determined by the features mentioned above.

6.2.1.4 Once a gauging flume has been installed, the user shall prevent any change that can affect the discharge characteristics.

6.2.2 Flume structure

6.2.2.1 The structure shall be rigid and watertight and capable of withstanding flood flow conditions without distortion or fracture, from outflanking or from downstream erosion. The axis shall be in line with the direction of flow of the upstream channel, and the geometry shall conform to the dimensions given in Clauses 10, 11 and 12.

6.2.2.2 The surfaces of the flume throat and the immediate approach channel shall be smooth. They shall be constructed in concrete with a smooth cement finish or surfaced with a smooth non-corrodible material. In laboratory installations, the finish shall be equivalent to rigid plastic, rolled sheet metal or planed, sanded and painted timber. The surface finish is of particular importance within the prismatic part of the throat but can be relaxed a distance along the profile $0{,}5H_{max}$ upstream and downstream of the throat proper.

The user should confirm that the building materials used in the construction of natural channels are acceptable in the country of operation.

6.2.2.3 In order to minimize the uncertainty in the discharge, the following tolerances are acceptable, providing that no tolerance with respect to alignment or dimension is required to be less than 0,001 m:

a) on the bottom width of the throat, 0,2 % of this width with an absolute maximum of 0,01 m;

b) on deviation from a plane of the plane surfaces in the throat, 0,1 % of L;

c) on the width between vertical surfaces in the throat, 0,2 % of this width with a maximum of 0,01 m;

d) on the average longitudinal and transverse slopes of the base of the throat, 0,1 %;

e) on a slope of inclined surfaces in the throat, 0,1 %;

f) on a length of the throat, 1 % of L;

© ISO 2022 – All rights reserved

Documents
Document Sharing Hub
Full document details: BS ISO 4359:2022

g) on deviation from a cylindrical or a conical surface in the entrance transition to the throat, 0,1 % of L;

h) on deviation from a plane of the plane surfaces in the entrance transition to the throat, 0,1 % of L;

i) on deviation from a plan of the plane surface in the exit transition from the throat, 0,3 % of L;

j) on other vertical or inclined surfaces, deviation from a plane or curve, 1 %;

k) on deviation from a plane of the bed of the lined approach channel, 0,1 % of L.

NOTE It is possible that some of the dimensional and gradient accuracies can be relaxed without significant effect on the flow measurement accuracy of critical depth flumes.

6.2.2.4 The structure shall be measured on completion, and average values of relevant dimensions and their standard deviations at 68 % confidence limits computed. The former shall be used for computation of discharge and the latter shall be used to obtain the overall uncertainty in the determination of discharge.

6.2.3 Approach channel

6.2.3.1 On all installations the flow in the approach channel shall be free from disturbance and shall have a velocity distribution as uniform as reasonably practicable over the cross-sectional area. Figure 3 shows typical dimensionless velocity distributions in rectangular and trapezoidal channels, which are relevant in site selection. For a given shape of channel, the velocity distribution should be reasonably similar to one of those presented in Figure 3. This can usually be verified by inspection or measurement. In the case of natural streams or rivers, this can only be attained by having a long straight approach channel free from projections into the flow.

6.2.3.2 The following are general recommendations and requirements related to the approach channel:

a) Any alteration in the flow conditions owing to the construction of the flume should be considered. For example, there can be a build-up of shoals or debris upstream of the structure, which in time affects the flow conditions. Any likely consequential changes in the water level therefore need to be taken into account in the design of gauging stations.

b) In an artificial channel, the cross-section shall be uniform and the channel shall be straight for a length equal to at least five times its water-surface width upstream of the head measurement location, but where practicable in new installations for a length of 10 times the water-surface width upstream of the flume throat.

c) In a natural stream or river, the cross-section shall be reasonably uniform and the channel shall be straight for a sufficient length to ensure a reasonably uniform velocity distribution.

d) If the entry to the approach channel is through a bend, or if the flow is discharged into the channel through a conduit or a channel of smaller cross-section, or at an angle, then a longer length of straight approach channel can be required to achieve a reasonably uniform velocity distribution.

e) Vanes to straighten the flow shall not be installed closer to the points of measurement than a distance 10 times the maximum head to be measured.

f) Under certain conditions, a standing wave can occur upstream of the gauging flume, e.g. if the approach channel is steep. Provided that this wave is at a distance of not less than 30 times the maximum head upstream, flow measurement is feasible, subject to confirmation that a reasonably uniform velocity distribution exists at the gauging station and that the Froude number in this section is no more than 0,6. Ideally, high Froude numbers should be avoided in the approach channel for accurate flow measurement. If a standing wave occurs within this distance, the approach conditions and/or the flume shall be modified.

© ISO 2022 – All rights reserved
Documents
Document Sharing Hub
Full document details: BS ISO 4359:2022

6.2.4 Downstream conditions

6.2.4.1 The channel downstream of the structure is usually of no importance as such if the flume has been so designed that the flow is modular under all operating conditions. A downstream gauge shall be provided to measure tailwater levels to determine if and when drowned flow occurs.

6.2.4.2 If downstream scouring (which can lead to instability of the structure) is anticipated, then particular measures to prevent this may be necessary.

7 Maintenance

7.1 Maintenance of the measuring structure and the approach channel is important, in order to secure accurate continuous measurements.

7.2 The approach channel shall be kept free of silt, vegetation and obstructions that can have deleterious effects on flow conditions specified for the standard installation. The float well and the entry from the approach channel shall also be kept clean and free from deposits. The downstream channel shall be kept free of obstructions that can cause the weir to drown.

7.3 The flume structure shall be kept clean and free from clinging debris, particularly within the throat section, and care shall be taken in the process of cleaning to avoid damage to the structure.

7.4 Head-measurement devices, connecting conduits and stilling wells shall be cleaned and checked for leakage. The hook or point gauge, float or other instrument used to measure head shall be checked periodically to ensure accuracy.

8 Measurement of head

8.1 General

8.1.1 Where spot measurements are required, the heads can be measured by vertical gauges, hooks, points, wires or tape gauges. Where continuous records are required, recording gauges shall be used, typically based on float and shaft encoders, cameras, ultrasonics, radar or pressure transducers.

8.1.2 As the size of the flume and head reduces, small discrepancies in construction and in the zero setting and reading of the head measuring device become of greater relative importance.

8.2 Location of head measurement(s)

8.2.1 Stations for the measurement of head on the flume shall be located at a sufficient distance upstream from the flume to avoid the region of surface drawdown. On the other hand, they shall be close enough to the flume to ensure that the energy loss between the section of measurement and the control section within the flume throat shall be negligible. The location for head measurement is dealt with in Clauses 10, 11 and 12.

8.2.2 Flow is modular when it is independent of variations in tailwater level. This condition is met when the tailwater total head above flume invert level is less than or equal to the submergence ratio at the modular limit, as defined in Clauses 10, 11 and 12 for rectangular-throated, trapezoidal-throated and U-throated flumes, respectively.

8.2.3 A significant error in the calculated discharge will develop if the tailwater level causes the submergence ratio to exceed the modular limit. A downstream gauge shall be installed to check that

© ISO 2022 – All rights reserved

Documents
Document Sharing Hub
Full document details: BS ISO 4359:2022

the modular limit is not exceeded. A simple staff gauge in the downstream channel will normally be the minimum requirement for this purpose.

8.3 Gauge wells

8.3.1 It is common to measure the upstream head in a gauge well to reduce the effects of water surface oscillations. Alternatively, data-logged results can be post-processed to eliminate or reduce such oscillations.

8.3.2 Periodic checks on the measurement of the head in the approach channel shall be made.

8.3.3 Gauge wells shall be vertical and of sufficient height and depth to cover the full range of water levels. In field installations, they shall have a minimum height of 0,3 m above the highest water levels expected. Gauge wells shall be connected to the appropriate head measurement positions by means of suitable conduits.

8.3.4 Both the well and the connecting pipe shall be watertight. Where the well is provided for the accommodation of the float of a level recorder, it shall be of adequate size and depth.

8.3.5 The pipe shall have its invert not less than 0,06 m below the lowest level to be gauged.

8.3.6 Pipe connections to the measurement position shall terminate either flush with, or at right angles to, the boundary of the approach channel. The channel boundary shall be plain and smooth (equivalent to carefully finished concrete) within a distance 10 times the diameter of the pipes from the centreline of the connection. The pipes may be oblique to the wall only if they are fitted with a removable cap or plate, set flush with the wall, through which a number of holes are drilled. The edges of these holes shall not be rounded or burred. Perforated cover plates are not recommended where weed or silt are likely to be present.

8.4 Zero setting

8.4.1 Accurate initial setting of the zero of the head measuring device with reference to the level of the flume invert and subsequent regular checking of the settings are essential.

8.4.2 An accurate means of checking the zero at frequent intervals shall be provided. Benchmarks, in the form of horizontal metal plates, shall be set up on the top of the vertical sidewalls and in the gauge wells. These shall be accurately levelled to ensure their elevation relative to the flume invert level is known.

8.4.3 Instrument zeros can be checked relative to these benchmarks without the necessity of resurveying the crest each time. Any settlement of the structure can, however, affect the relationships between the flume invert and benchmark levels and it is advisable to make occasional checks on these relationships.

8.4.4 For small installations, a zero check based on the water level (either when the flow ceases or just begins) is susceptible to serious errors due to surface tension effects and shall not be relied upon.

9 General formulae for discharge

9.1 Discharge based on critical flow in the flume throat

9.1.1 Critical depth theory, augmented by experimental data, may be used to deduce the basic formulae for free discharge through streamlined contractions. Since the simple theory relates to the

© ISO 2022 – All rights reserved
Documents
Document Sharing Hub
Full document details: BS ISO 4359:2022

frictionless flow of an ideal fluid, an additional coefficient, known as the "coefficient of discharge, C_D", must be introduced to deal with the flow of a real fluid, such as water, and to take into account the development of boundary layers that occur within the throat. The value of the coefficient C_D is usually either based on experimental studies or deduced by considering a modification to the simple theory. Another coefficient, known as the "shape coefficient, C_s", is then required to generalize the simple theory to make it applicable to flow through any cross-sectional shape, rather than just flow through a rectangular flume. Finally, a third coefficient, known as the "velocity of approach coefficient, C_v", is then used to relate the head in the throat with the gauged head, typically measured a short distance upstream of the throat in the approach channel.

9.1.2 The specific energy, E, of flow in an open channel is given by Formula (6):

$$E = \beta d + \frac{\alpha \bar{V}^2}{2g} \tag{6}$$

where

d is the depth of flow;

$\bar{V}$ is the average velocity through the section;

α is the kinetic energy correction coefficient, which takes into account the non-uniformity in velocity distribution;

β is a coefficient which depends on the mean curvature of the streamlines.

9.1.3 The formula of continuity is given by Formula (7):

$$Q = A\bar{V} \tag{7}$$

where

Q is the discharge;

A is the area of the flow cross-section.

Hence, Formula (8):

$$E = \beta d + \frac{\alpha Q^2}{2gA^2} \tag{8}$$

9.1.4 Critical flow occurs when E has a minimum value for a given discharge Q, treating depth d and area A, which is related to d for any given cross-sectional geometry, as the variables. It can be shown that the specific energy is a minimum when, as given by Formula (9):

$$Q^2 = \frac{\beta g\, A^3}{\alpha w} \tag{9}$$

where w is the water surface width.

9.1.5 Experimentally observed velocity profiles indicate that the velocity distribution is almost uniform in the throat of a flume, and it may be assumed therefore that α = 1 under certain conditions. If the streamlines are not significantly curved, a condition approached if the throat is in excess of a certain

© ISO 2022 – All rights reserved

Documents
Document Sharing Hub
Full document details: BS ISO 4359:2022

minimum length, then β = 1. Hence the basic formula defining critical flow through a streamlined contraction is given by Formula (10):

$$Q = \sqrt{\frac{g\,A_c^3}{w_c}} \tag{10}$$

where

subscript "c" indicates critical flow, assumed to occur within the throat of a flume;

A_c is the area of cross-section;

w_c is the surface width of the cross-section.

This is the same as Formula (2), in Clause 5.

Formula (10) is not immediately applicable to the theoretical derivation of a stage–discharge relationship, because

a) it does not take account of the development of boundary layers that result in slower moving fluid along the bed and sidewalls of the throat, and

b) it is based on the area and water surface width at the critical section, the location of which is ill-defined, so that direct measurement of the water level at that section is impractical.

Thus, the basic formula must be transformed into a more practical form, and adjusted to take account of the boundary effects.

9.2 Discharge based on observed upstream head

9.2.1 For the flow of a real fluid through a streamlined contraction, Formula (10) may be developed further to give the discharge in terms of the head measured a short distance upstream and for each type of approach channel cross-sectional shape and throat shape. See Figures 4 to 6 for the three standard shapes of flume often used in practice: rectangular-throated, trapezoidal-throated and U-throated, respectively. Reference should also be made to Figure 1, which shows the general features of flow through a trapezoidal-throated flume, indicating a typical water surface profile, energy line and how the boundary layer displacement thicknesses reduce the cross-sectional area of the throat. The theory is now developed further, initially for flow through a rectangular flume and then generalized for flow in other types of flume.

9.2.2 For flow in a rectangular flume (see Figure 4), the total head under critical flow conditions, H_c, may be linked to the critical depth, d_c, using Formula (10), as shown by Formula (11):

$$H_c = d_c + \frac{Q^2}{2gA_c^2} = d_c + \frac{A_c}{2w_c} = d_c + \frac{bd_c}{2b} = \frac{3}{2}d_c \tag{11}$$

Applying Formula (10) to a rectangular section gives Formula (12):

$$Q^2 b = g(bd_c)^3 \tag{12}$$

The discharge through a streamlined rectangular contraction may then be expressed in terms of the total head at the throat, H_c, by linking Formulae (11) and (12) to give Formula (13):

$$Q = \left(\frac{2}{3}\right)^{3/2} g^{1/2} b H_c^{3/2} \tag{13}$$

This is the same as Formula (4) in Clause 5, but expressed differently.

© ISO 2022 – All rights reserved
Documents
Document Sharing Hub
Full document details: BS ISO 4359:2022

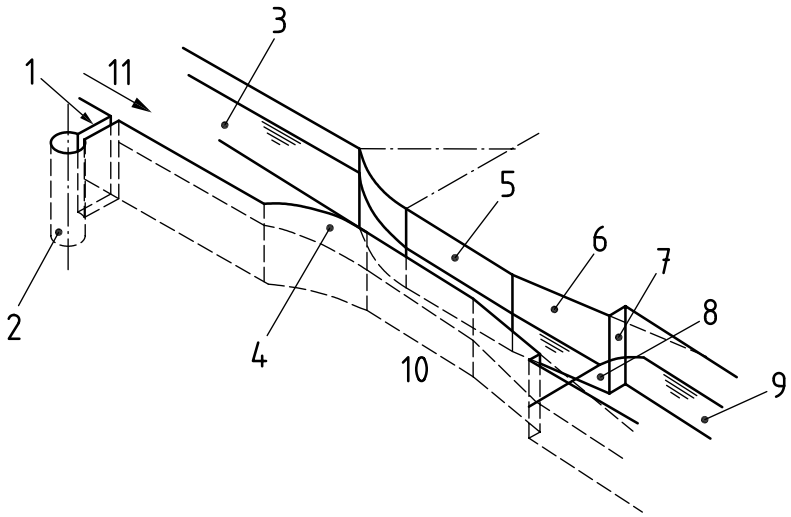

a) Isometric of level-invert rectangular-throated flume (p = 0)

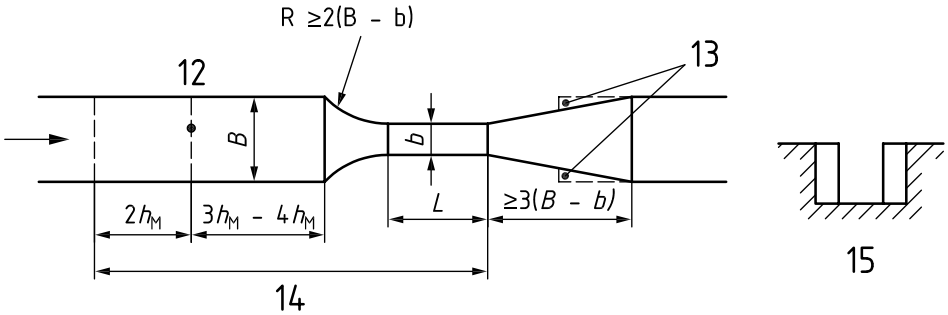

b) Plan view of rectangular-throated flume

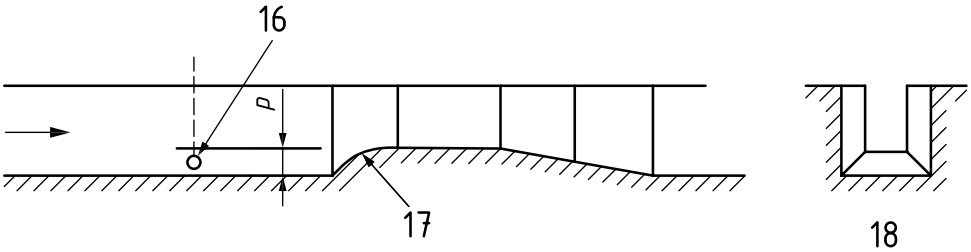

c) Longitudinal section of rectangular-throated flume with raised invert (hump)

Key

1 connecting slot or pipe
2 stilling well
3 approach channel
4 entrance transition
5 throat
6 exit transition
7 example of truncation
8 standing wave
9 exit channel
10 horizontal invert
11 flow
12 head gauging section
13 when recovery of head is not important, the exit transition may be truncated after half its length
14 in a flume without a hump (p = 0) the invert over this length shall be truly level
15 front view (level invert)
16 connection to stilling well
17 radius that shall be chosen so that the bottom contraction starts at the same section as the side contractions (for a flume with a bottom contraction only, the radius = 4p)
18 front view (raised invert)

Figure 4 — Rectangular-throated flume in rectangular channel

© ISO 2022 – All rights reserved

Documents
Document Sharing Hub
Full document details: BS ISO 4359:2022

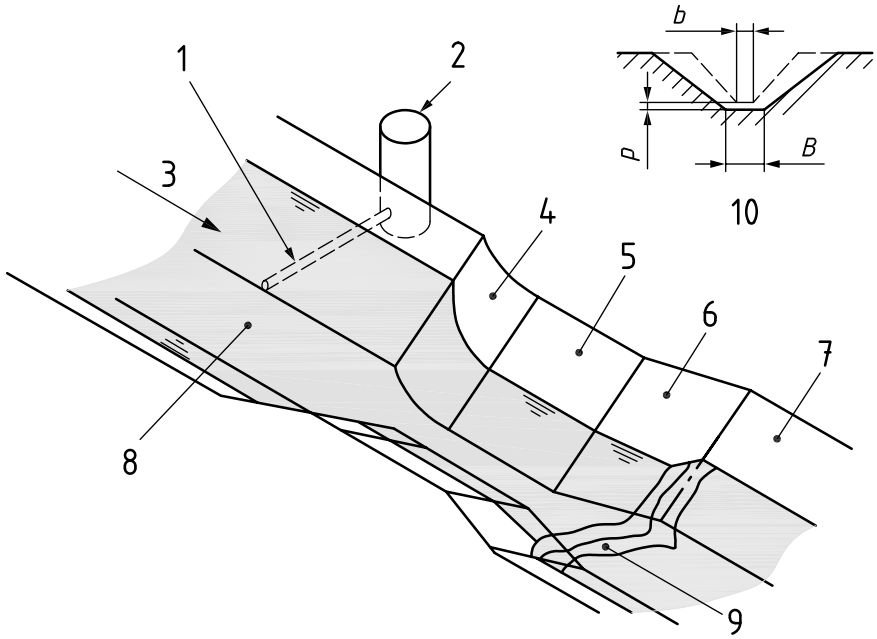

a) Isometric view of level invert flume (p = 0)

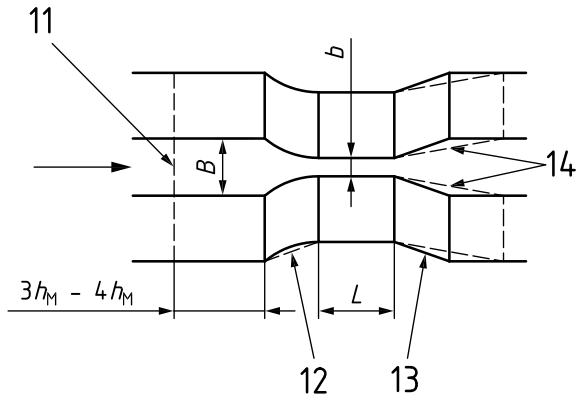

b) Plan view (example shown, no hump $m_a = m$, skew cylinder entrance transition)

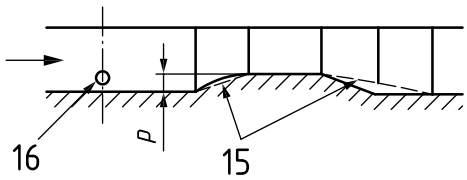

c) Longitudinal section of flume with raised invert (hump)

© ISO 2022 – All rights reserved

Documents
Document Sharing Hub
Full document details: BS ISO 4359:2022

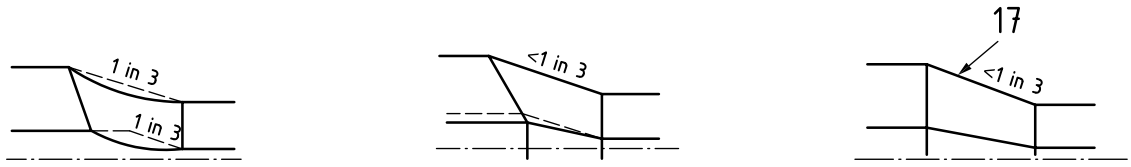

Conical ($m_a \neq m$, no hump) Plane ($m_a \neq m$, no hump) Warped ($m_a \neq m$, no hump)

d) Examples of plans of entrance transitions

Key

1 connecting pipe
2 stilling well
3 flow
4 entrance transition
5 throat
6 exit transition
7 exit channel
8 approach channel
9 standing wave
10 front view with hump ($p \neq 0$)
11 head gauging section
12 radius chosen so that entrance transition lies entirely within plane defining 1 in 3 contraction
13 not more than 1 in 3 expansion on any horizontal section (or equivalent curve)
14 1 in 6 expansion for high modular limit and head recovery
15 not more than 1 in 3 (or equivalent curve)
16 connection to stilling well
17 generators are straight lines

Figure 5 — Trapezoidal-throated flume in trapezoidal channel

© ISO 2022 – All rights reserved

Documents
Document Sharing Hub
Full document details: BS ISO 4359:2022

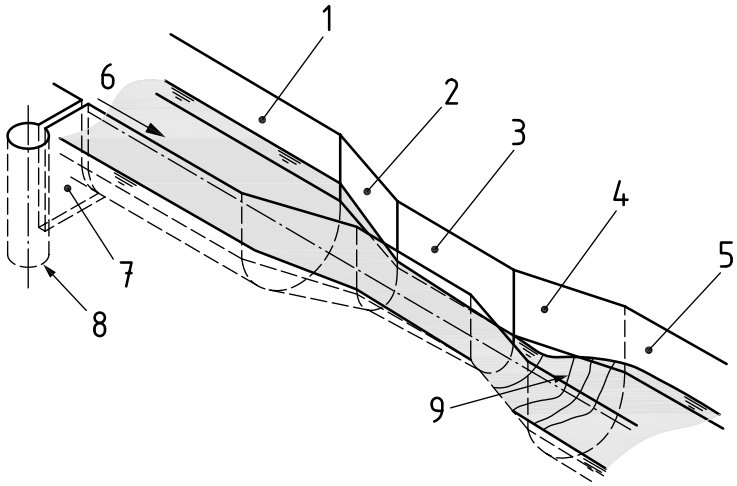

a) Isometric view

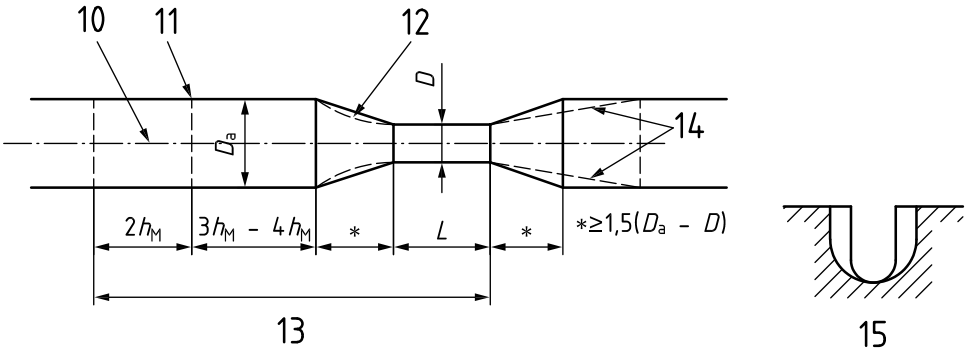

b) Plan view

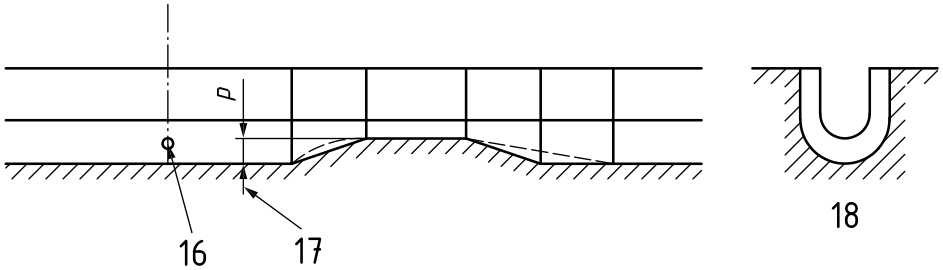

c) Longitudinal section of flume with raised invert (hump)

Key

1 approach channel
2 entrance transition
3 throat
4 exit transition
5 exit channel
6 flow
7 connecting slot or pipe
8 stilling well
9 standing wave
10 invert line
11 head gauging section
12 the straight-sided contraction may be replaced by curved surfaces, provided they lie within the full lines
13 in a flume without a hump (p = 0), the invert over this length shall be truly level
14 1 in 6 expansion for high modular limit and head recovery
15 front view (level invert)
16 connection to stilling well
17 in a level flume, p = 0; for a flume with a hump, a convenient value of p is 0,5 (D_a – D)
18 front view (raised invert)

Figure 6 — U-throated flume in U-shaped channel

© ISO 2022 – All rights reserved
Documents
Document Sharing Hub
Full document details: BS ISO 4359:2022

9.2.3 In order to account for the presence of boundary layers that form in the throat section, growing progressively from the leading edge, the boundary layer displacement thickness is used to modify the geometrical parameters of the cross-section of the throat as given by Formula (14):

$$Q = \left(\frac{2}{3}\right)^{3/2} g^{1/2} b_{\mathrm{e}} H_{\mathrm{ce}}^{3/2} \tag{14}$$

where

b_{e} is the effective width of flume throat (e.g. for a rectangular cross-section, $b_e = b - 2\delta_*$);

H_{ce} is the effective total head at the throat (i.e. $H_{\mathrm{ce}} = H_{\mathrm{c}} - \delta_*$), which also equals the total head upstream, H_{e};

δ_* is the boundary layer displacement thickness.

9.2.4 The boundary layer displacement thickness is the amount by which a boundary surface needs to be moved normal to that surface to compensate for the reduced velocity caused by the boundary layer. It also effectively implies that the fluid may be treated as if it were an ideal fluid throughout the rest of the flow domain. Typically, a boundary layer develops from any leading edge of a surface, grows slowly, and the corresponding value of δ* is a small proportion of the actual thickness, δ. Figure 7 indicates how these concepts are applied to long-throated flumes. Figure 7 c) shows how the actual and effective heads are related, both at the throat and at the upstream gauging section. Figure 8 shows the effective cross-sections of various flumes, illustrating the effect of the boundary layer displacement thicknesses on the throat geometry.

© ISO 2022 – All rights reserved

Documents
Document Sharing Hub
Full document details: BS ISO 4359:2022