BS ISO 4377:2012

BSI Standards Publication

Hydrometric determinations — Flow measurement in open channels using structures — Flat-V weirs

bsi.

...making excellence a habit.™

Document Sharing Hub

National foreword

This British Standard is the UK implementation of ISO 4377:2012. It supersedes BS ISO 4377:2002 which is withdrawn.

The UK participation in its preparation was entrusted to Technical Committee CPI/113/2, Notches weirs and flumes.

A list of organizations represented on this committee can be obtained on request to its secretary.

This publication does not purport to include all the necessary provisions of a contract. Users are responsible for its correct application.

© The British Standards Institution 2012. Published by BSI Standards Limited 2012

ISBN 978 0 580 70396 6

ICS 17.120.20

Compliance with a British Standard cannot confer immunity from legal obligations.

This British Standard was published under the authority of the Standards Policy and Strategy Committee on 31 August 2012.

Amendments issued since publication

Date	Text affected

Documents
Document Sharing Hub

Full document details: BS ISO 4377:2012

INTERNATIONAL STANDARD

ISO 4377

Fourth edition
2012-08-01

Hydrometric determinations — Flow measurement in open channels using structures — Flat-V weirs

Déterminations hydrométriques — Mesure de débit dans les canaux découverts au moyen de structures — Déversoirs en V ouvert

Reference number
ISO 4377:2012(E)

Documents
Document Sharing Hub

© ISO 2012

Full document details: BS ISO 4377:2012

COPYRIGHT PROTECTED DOCUMENT

© ISO 2012

All rights reserved. Unless otherwise specified, no part of this publication may be reproduced or utilized in any form or by any means, electronic or mechanical, including photocopying and microfilm, without permission in writing from either ISO at the address below or ISO's member body in the country of the requester.

ISO copyright office
Case postale 56 • CH-1211 Geneva 20
Tel. + 41 22 749 01 11
Fax + 41 22 749 09 47
E-mail copyright@iso.org
Web www.iso.org

Published in Switzerland

© ISO 2012 – All rights reserved

Documents
Document Sharing Hub

Full document details: BS ISO 4377:2012

Contents

Page

Foreword v

1 Scope 1

2 Normative references 1

3 Terms and definitions 2

4 Symbols 3

5 Characteristics of flat-V weirs 4

6 Installation 4
6.1 Selection of site 4
6.2 Installation conditions 7
6.3 Weir structure 8
6.4 Downstream conditions 8

7 Maintenance 8

8 Measurement of head(s) 9
8.1 General 9
8.2 Stilling (gauge) wells 9
8.3 Zero setting 11
8.4 Location of head measurement sections 13

9 Discharge relationships 14
9.1 Equations of discharge 14
9.2 Effective heads 15
9.3 Shape factors 16
9.4 Coefficient of velocity 16
9.5 Conditions for modular/drowned flow 18
9.6 Drowned flow reduction factor 21
9.7 Limits of application 28

10 Computation of discharge 29
10.1 General 29
10.2 Successive approximation method 29
10.3 Coefficient of velocity method 31
10.4 Accuracy 32

11 Uncertainties in flow determination 32
11.1 General 32
11.2 Combining uncertainties 33
11.3 Uncertainty in the discharge coefficient $u^*(C_{De})_{68}$ for the flat-V weir 34
11.4 Uncertainty in the drowned flow reduction factor $u^*(C_{dr})$ 34
11.5 Uncertainty in the effective head 35
11.6 Uncertainty budget 35
11.7 Variation of uncertainty with flow and uncertainty in mean daily flow and the daily flow volume 36

12 Examples 37
12.1 Example 1 — Computation of modular flow at low discharge 37
12.2 Example 1 — Uncertainty in computed discharge 39
12.3 Example 2 — Computation of drowned flow at high discharge 41
12.4 Example 2 — Uncertainty in computed discharge 43

Annex A (normative) **Velocity distribution** 46

Documents
Document Sharing Hub

© ISO 2012 – All rights reserved

Full document details: BS ISO 4377:2012

Annex B (informative) **Introduction to measurement uncertainty** **47**

Annex C (informative) **Performance guide for hydrometric equipment for use in technical standards** **56**

Bibliography **59**

© ISO 2012 – All rights reserved

Documents
Document Sharing Hub

Full document details: BS ISO 4377:2012

Foreword

ISO (the International Organization for Standardization) is a worldwide federation of national standards bodies (ISO member bodies). The work of preparing International Standards is normally carried out through ISO technical committees. Each member body interested in a subject for which a technical committee has been established has the right to be represented on that committee. International organizations, governmental and non-governmental, in liaison with ISO, also take part in the work. ISO collaborates closely with the International Electrotechnical Commission (IEC) on all matters of electrotechnical standardization.

International Standards are drafted in accordance with the rules given in the ISO/IEC Directives, Part 2.

The main task of technical committees is to prepare International Standards. Draft International Standards adopted by the technical committees are circulated to the member bodies for voting. Publication as an International Standard requires approval by at least 75 % of the member bodies casting a vote.

Attention is drawn to the possibility that some of the elements of this document may be the subject of patent rights. ISO shall not be held responsible for identifying any or all such patent rights.

ISO 4377 was prepared by Technical Committee ISO/TC 113, *Hydrometry*, Subcommittee SC 2, *Flow measurement structures*.

This fourth edition cancels and replaces the third edition (ISO 4377:2002), which has been technically revised to update the treatment of uncertainty to be consistent with the other standards relating to flow measurement structures.

© ISO 2012 – All rights reserved

Documents
Document Sharing Hub
Full document details: BS ISO 4377:2012

Documents
Document Sharing Hub

Full document details: BS ISO 4377:2012

INTERNATIONAL STANDARD ISO 4377:2012(E)

Hydrometric determinations — Flow measurement in open channels using structures — Flat-V weirs

1 Scope

This International Standard describes the methods of measurement of flow in rivers and artificial channels under steady or slowly varying conditions using flat-V weirs (see Figure 1).

Annex A gives guidance on acceptable velocity distribution.

2 Normative references

The following documents, in whole or in part, are normatively referenced in this document and are indispensable for its application. For dated references, only the edition cited applies. For undated references, the latest edition of the referenced document (including any amendments) applies

ISO 772, *Hydrometry — Vocabulary and symbols*

ISO/TS 25377, *Hydrometric uncertainty guidance (HUG)*

© ISO 2012 – All rights reserved

Documents
Document Sharing Hub
Full document details: BS ISO 4377:2012

3 Terms and definitions

For the purposes of this document, the terms and definitions given in ISO 772 apply.

Dimensions in millimetres

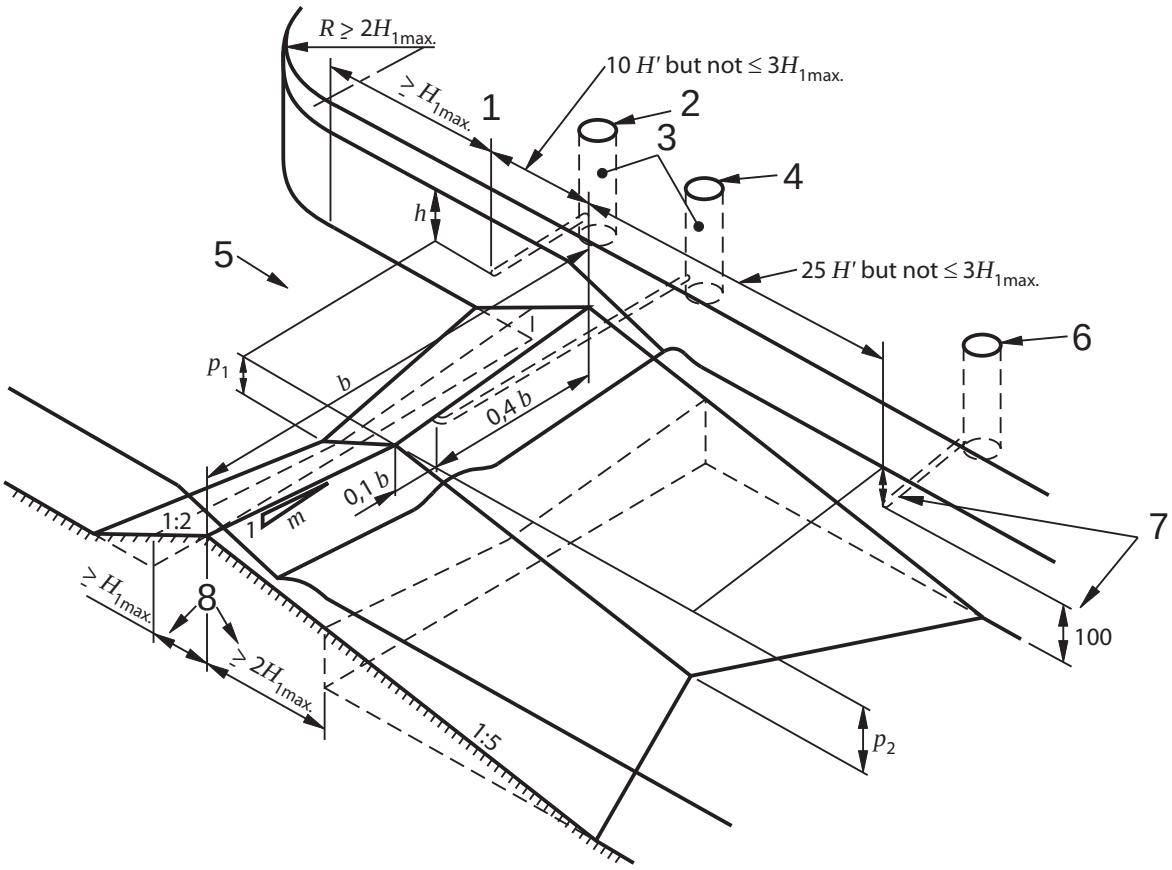

Key

1	head gauging section	b	crest width
2	upstream tapping	H'	difference between the invert (apex) of the V and the top of the V
3	stilling wells	H_{1max}	maximum upstream total head above crest elevation
4	crest tapping	h	gauged head above lowest crest elevation
5	flow	p	difference between mean bed level and lowest crest elevation
6	downstream head measuring point		
7	minimum 100 mm above stilling basin level		
8	limits of permissible upstream and downstream truncations		

Figure 1 — Triangular profile flat-V weir

© ISO 2012 – All rights reserved
Documents
Document Sharing Hub
Full document details: BS ISO 4377:2012

4 Symbols

The following is a list of symbols used, with the corresponding units of measurement.

Symbol[a]	Meaning	Units
A	Area of cross-section of flow	m^2
B	Width of approach channel	m
b	Crest width	m
C_D	Coefficient of discharge	Non-dimensional
C_{De}	Effective coefficient of discharge	Non-dimensional
C_{dr}	Drowned flow reduction factor	Non-dimensional
C_v	Coefficient of approach velocity	Non-dimensional
g	Gravitational acceleration (standard value)	ms^{-2}
H	Total head above lowest crest elevation	m
H_{1e}	Total effective upstream head	m
H_{2e}	Total effective downstream head	m
H_{1max}	Maximum upstream total head above crest elevation	m
h	Gauged head above lowest crest elevation	m
h_1	Upstream gauged head	m
h_{1e}	Effective upstream gauged head	m
h_2	Downstream gauged head	m
h_{2e}	Effective downstream gauged head	m
h_p	Separation pocket head	m
h_{pe}	Effective separation pocket head relative to lowest crest elevation	m
h', H'	Difference between lowest and highest crest elevations	m
K_1,K_2	Constants	Non-dimensional
k_h	Head correction factor	m
L_1	Distance of upstream head measurement position from crest line	m
m	Crest cross-slope (1 vertical: m horizontal)	Non-dimensional
n	Number of measurements in a set	Non-dimensional
p	Difference between mean bed level and lowest crest elevation	m
Q	Discharge	m^3s^{-1}
Q_{dfv}	Total daily flow volume	m^3d^{-1}
t	Measurement observation frequency time	minutes
$\bar{v}$	Mean velocity at cross-section	m/s
$\bar{v}_a$	Mean velocity in approach channel	m/s
u_h	Absolute uncertainty in head measurement	m
$u(E)$	Absolute uncertainty in gauge zero	m
$u^*_{(CD)}$	Percentage uncertainty in discharge coefficient	Non-dimensional
$u^*(C_v)$	Percentage uncertainty in coefficient of velocity	Non-dimensional
$u^*(C_{dr})$	Percentage uncertainty in drowned flow reduction factor	Non-dimensional
$u^*(h)$	Percentage uncertainty in head measurement	Non-dimensional
$u^*(H_e)$	Percentage uncertainty in total effective head	Non-dimensional
$U^*(Q)$	Percentage uncertainty in discharge determination	Non-dimensional
$U^*(Q_{dmf})$	Percentage uncertainty in the daily mean flow	Non-dimensional
$U^*(Q_{dfv})$	Percentage uncertainty in the total daily flow volume	Non-dimensional
Z_h, Z_H	Shape factors	Non-dimensional
α	Coriolis energy coefficient	Non-dimensional

© ISO 2012 – All rights reserved

Documents
Document Sharing Hub
Full document details: BS ISO 4377:2012

Subscript

1	denotes upstream value
2	denotes downstream value
e	denotes “effective” and implies that corrections for fluid effects have been made to the quantity
a	denotes approach channel

5 Characteristics of flat-V weirs

The standard flat-V weir is a control structure, the crest of which takes the form of a shallow V when viewed in the direction of flow.

The standard weir has a triangular profile with an upstream slope of 1 (vertical): 2 (horizontal) and a downstream slope of 1:5. The cross-slope of the crest line shall not be steeper than 1:10. The cross-slope shall lie in the range of 0 to 1:10 and, at the limit when the cross-slope is zero, the weir becomes a two-dimensional triangular profile weir.

The weir can be used in both the modular and drowned ranges of flow. In the modular flow range, discharges depend solely on upstream water levels and a single measurement of upstream head is sufficient. In the drowned flow range, discharges depend on both upstream and downstream water levels, and two independent head measurements are required. For the standard flat-V weir, these are

— the upstream head, and

— the head developed within the separation pocket which forms just downstream of the crest or, as a less accurate alternative, the head measured just downstream of the structure.

The flat-V weir will measure a wide range of flows and has the advantage of high sensitivity at low flows.

Operation in the drowned flow range minimizes afflux at very high flows. Flat-V weirs shall not be used in steep rivers (see 6.2.2.6), particularly where there is a high sediment load.

There is no specified upper limit for the size of this structure. Table 1 gives the ranges of discharges for three typical weirs.

Table 1 — Ranges of discharge

Elevation of crest above bed m	Crest/cross-slope ratio	Width m	Range of discharge m^3s^{-1}
0,2	1:10	4	0,015 to 5
0,5	1:20	20	0,030 to 180 (within maximum head of 3 m)
1,0	1:40	80	0,055 to 630 (within maximum head of 3 m)

6 Installation

6.1 Selection of site

6.1.1 The weir shall be located in a straight section of the channel, avoiding local obstructions, roughness or unevenness of the bed.

© ISO 2012 – All rights reserved
Documents
Document Sharing Hub
Full document details: BS ISO 4377:2012

6.1.2 A preliminary study of the physical and hydraulic features of the proposed site shall be made, to check that it conforms (or can be constructed or modified to conform) to the requirements necessary for measurement of discharge by the weir. Particular attention shall be paid to the following:

a) the adequacy of the length of channel of regular cross-section available (see 6.2.2.2);

b) the uniformity of the existing velocity distribution (see Annex A);

c) the avoidance of a steep channel (see 6.2.2.6);

d) the effects of increased upstream water levels due to the measuring structure;

e) the conditions downstream (including such influences as tides, confluences with other streams, sluice gates, mill dams and other controlling features, such as seasonal weed growth, which might cause drowning);

f) the impermeability of the ground on which the structure is to be founded and the necessity for piling, grouting or other means of controlling seepage;

g) the necessity for flood banks, to confine the maximum discharge to the channel;

h) the stability of the banks, and the necessity for trimming and/or revetment;

i) the uniformity of the approach channel section;

j) the effect of wind on the flow over the weir, especially when it is wide and the head is small and when the prevailing wind is in a transverse direction.

k) If silt removal could be an operation and maintenance requirement, consideration should be given to the accessibility of the site for heavy plant following construction and reinstatement of the site.

l) A suitable location is required for the instrument building/housing to allow the effective operation and maintenance of the intake pipe and stilling well.

6.1.3 If the site does not possess the characteristics necessary for satisfactory measurements, or if an inspection of the stream shows that the velocity distribution in the approach channel deviates appreciably from the examples shown in Figure 2, the site shall not be used unless suitable improvements are practicable.

6.1.4 Weirs act as obstacles to the movement of most fish and other aquatic species. Care should therefore be taken to ensure that the installation of gauging structures such as flat-V weirs does not have a detrimental effect on the aquatic ecology where this might be an issue. In addition, care should be taken to ensure that any gauging structure complies with the relevant national and international legislation and regulations, for example the European Parliament EU Water Framework Directive (Directive 2000/60/EC). Where the movement of aquatic life could be compromised by the installation of a flow measurement structure, this may have to be reflected in the design, e.g. limit the crest height and provide an adequate depth of stilling basin. Alternatively, a fishpass could be installed (ISO 26906).

© ISO 2012 – All rights reserved

Documents
Document Sharing Hub
Full document details: BS ISO 4377:2012

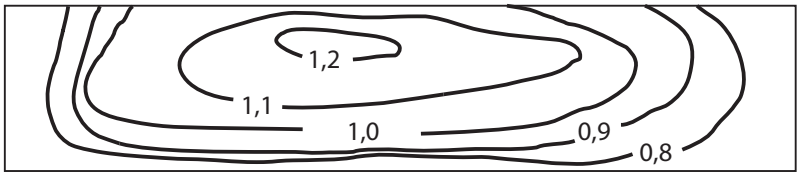

a) $\left(\frac{\alpha_{\text{left}}}{\alpha_{\text{right}}} - 1\right) \times 100 = 6{,}9\ \%$

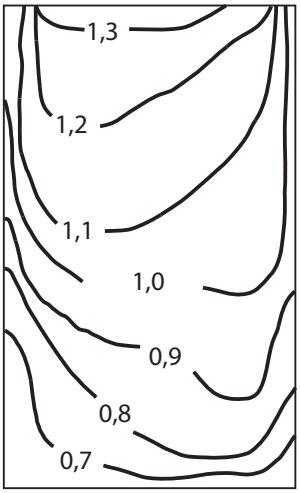

b) $\left(\frac{\alpha_{\text{left}}}{\alpha_{\text{right}}} - 1\right) \times 100 = 9{,}0\ \%$

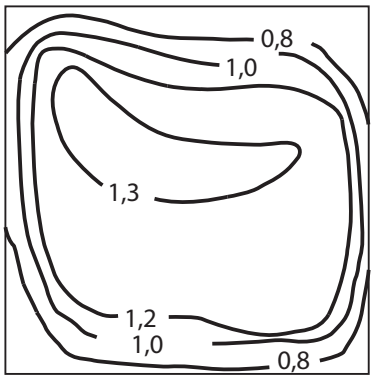

c) $\left(\frac{\alpha_{\text{left}}}{\alpha_{\text{right}}} - 1\right) \times 100 = 12{,}3\ \%$

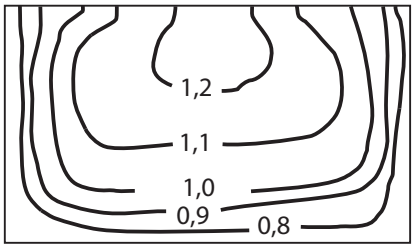

d) $\left(\frac{\alpha_{\text{left}}}{\alpha_{\text{right}}} - 1\right) \times 100 = 1{,}2\ \%$

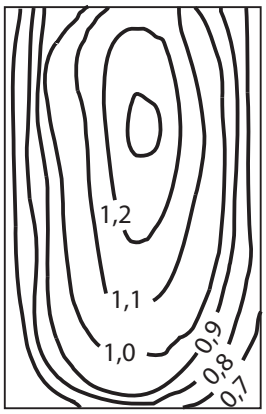

e) $\left(\frac{\alpha_{\text{left}}}{\alpha_{\text{right}}} - 1\right) \times 100 = 0{,}6\ \%$

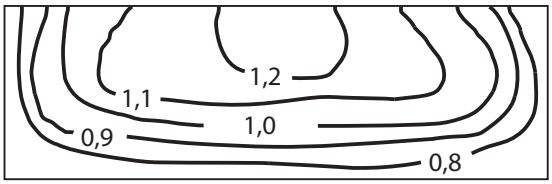

f) $\left(\frac{\alpha_{\text{left}}}{\alpha_{\text{right}}} - 1\right) \times 100 = 0{,}9\ \%$

Figure 2 — Examples of velocity profiles in the approach channel

© ISO 2012 – All rights reserved

Documents
Document Sharing Hub
Full document details: BS ISO 4377:2012

6.2 Installation conditions

6.2.1 General requirements

The complete measuring installation consists of an approach channel, a weir structure and a downstream channel.

NOTE 1 The condition of each of these three components affects the overall accuracy of the measurements. Installation requirements include such features as the surface finish of the weir, the cross-sectional shape of the channel, channel roughness and the influence of control devices upstream or downstream of the gauging structure.

NOTE 2 The distribution and direction of velocity can have an important influence on the performance of a weir (see 6.2.2 and Annex A).

NOTE 3 Once a weir has been installed, any physical changes in the installation will change the discharge characteristics; recalibration will then be necessary.

6.2.2 Approach channel

6.2.2.1 If the flow in the approach channel is disturbed by irregularities in the boundary (e.g. large boulders or rock outcrops, or by a bend, sluice gate or other feature which causes asymmetry of discharge across the channel), the accuracy of gauging may be significantly affected. The flow in the approach channel shall have a symmetrical velocity distribution (see Annex A). This can be achieved by providing a long, straight approach channel of uniform cross-section.

6.2.2.2 A minimum required length of straight approach channel shall be five times the width of the water surface at maximum flow, provided flow does not enter the approach channel with high velocity via a sharp bend or angled sluice gate.

NOTE 1 The length of straight approach channel required refers to the distance upstream from the upstream head measuring location (see Figure 1).

NOTE 2 A greater length of uniform approach channel is desirable if it can be readily provided.

6.2.2.3 In a natural channel where it is uneconomic to line the bed and banks with concrete for this distance, and iwhere the width between the vertical walls of the lined approach to the weir is less than the approach width of the natural channel, the banks shall be profiled to give a smooth transition from the approach channel width to the width between the vertical side walls. The unlined channel upstream of the contraction shall nevertheless conform to 6.2.2.1 and 6.2.2.2.

6.2.2.4 Vertical side walls constructed to effect a narrowing of the natural channel shall be symmetrically aligned with the centre line of the channel and curved to a radius not less than 2 H_{1max} as shown in Figure 1. The tangent point of this radius nearest to the weir crest shall be at least H_{1max} upstream of the head measurement section. The height of the side walls shall be chosen to contain the design maximum discharge.

6.2.2.5 In a channel where the flow is free from floating and suspended debris, good approach conditions can also be provided by suitably placed baffles formed of vertical laths. No baffle shall be nearer to the point at which the head is measured than 10 times the maximum upstream head.

6.2.2.6 Under certain conditions, a hydraulic jump may occur upstream of the measuring structure, for example if the approach channel is steep. Provided the wave created by the hydraulic jump is at a distance upstream of no less than 20 times the maximum upstream depth, flow measurement is feasible, subject to confirmation that an even velocity distribution exists at the gauging station.

6.2.2.7 Conditions in the approach channel can be verified by inspection or measurement for which several methods are available such as acoustic Doppler current profilers (ADCPs), current meters, floats or concentrations of dye, the last being useful in checking conditions at the bottom of the channel. A complete and quantitative assessment of velocity distribution can be made by means of an ADCP or a current meter. The velocity distribution shall comply with the requirements of A.5.

Documents
Document Sharing Hub

© ISO 2012 – All rights reserved

Full document details: BS ISO 4377:2012

6.3 Weir structure

6.3.1 The structure shall be rigid and watertight and capable of withstanding flood flow conditions without damage from outflanking or from downstream erosion. The weir crest shall be straight when viewed from above and at right angles to the direction of flow in the upstream channel. The geometry shall conform to the dimensions given in Clause 5 and Figure 1.

The weir shall be contained within vertical side walls, and the crest width shall not exceed the width of the approach channel (see Figure 1). Weir blocks may be truncated but their horizontal dimensions shall not be reduced in the direction of flow to less than H_{1max} and 2 H_{1max}, upstream and downstream of the crest line respectively, where H_{1max} is the maximum upstream total head, expressed in metres, relative to the lowest crest elevation.

6.3.2 The weir and the approach channel as far as the upstream tapping point shall be constructed with a smooth non-corrodible material. A good surface finish is important near the crest but can be relaxed a distance along the profile of 0,5 H_{1max} upstream and downstream of the crest line.

The crest shall be formed by using smooth material resistant to erosion and corrosion, for example, an embedded stainless steel insert with bevelled edges to conform with the surface of the weir block.

6.3.3 In order to minimize uncertainty in the discharge, the following tolerances are acceptable:

a) crest width (0,2 % with a maximum of 0,01 m);

b) upstream slope 1,0 %;

c) downstream slope 1,0 %;

d) crest cross-slope 1,0 %;

e) point deviations from the mean crest line ± 0,2 % of the crest width.

NOTE Laboratory installations will normally require higher accuracy.

6.3.4 The structure shall be measured upon completion and mean dimensional values and their standard deviations (SD) at the 68 % confidence limits computed. The former are used for computation of discharge and the latter are used to obtain the overall uncertainty of a single determination of discharge (see 11.2).

6.4 Downstream conditions

Conditions downstream of the structure are an important factor controlling the tailwater level. This level is one of the factors which determines whether modular or drowned flow conditions will occur at the weir. It is essential, therefore, to calculate or observe tailwater levels over the full discharge range and make decisions regarding the type of weir and its required geometry in light of this evidence.

7 Maintenance

Maintenance of the measuring structure and the approach channel is important to enable accurate measurements to be made. The approach channel shall be kept clean and free from silt and vegetation for at least the distance specified in 6.2.2.2. The float wells, tappings and connecting pipework shall also be kept clean and free from deposits.

The weir structure shall be kept clean and free from clinging debris and care taken in the process of cleaning to avoid damage to the weir crest.

The weir crest shall be inspected for erosion damage regularly. If the mean effective radius of the crest exceeds 5 mm, then refurbishment shall be considered. Algae growth on weir crests can be a particular

© ISO 2012 – All rights reserved
Documents
Document Sharing Hub
Full document details: BS ISO 4377:2012

problem which if not controlled can result in large inaccuracies in the computed discharges. In particular, the inaccuracies can be very large when the weir is operating close to the minimum recommended head (see 9.7.1).

Erosion lowers the zero datum and affects the coefficient of discharge at low flows (see 8.3 and Clause 9). In such cases, the crest shall be repaired *in-situ* or removed and replaced.

If conditions are modular when maintenance is carried out, a useful check on the satisfactory operation of a crest tapping is to ensure that the readings accord with the specification given in 9.5, i.e. when the weir is modular, the value of h_{pe}/H_{1e} always lies within the range (40 ± 5) %.

8 Measurement of head(s)

8.1 General

Where spot measurements are required, the heads can be measured by vertical staff gauges, hooks, points, wires or tape gauges. Where continuous records are required, recording devices such as chart recorders or stand-alone telemetry data loggers shall be used.

The measurement of head is covered in more detail in ISO 4373.

NOTE As the size of the weir and head decreases, small discrepancies in construction and in the zero setting and reading of the head measuring device become of greater relative importance.

8.2 Stilling (gauge) wells

8.2.1 It is common practice to measure the upstream head in a stilling well to reduce the effects of water surface irregularities. At some locations, it may be more appropriate to install the water level sensor in a tube.

Periodic checks on the measurement of the head in the approach channel shall be made. This shall be made using a staff gauge, or dipping device (see 8.1) located adjacent to the intake pipe or water level sensor tube. It is essential that the manual head measurement point is truly representative of the water level at the intake pipe or recorder tube. Check measurements shall also be made periodically within the stilling well or tube to ensure that the water level in the stilling well agrees with external reference measurement. If there is a significant difference, there may be a need to undertake maintenance, e.g. flush stilling well or undertake further investigation to explain differences.

Where the weir is designed to operate in the drowned flow range, a separate stilling well shall be used to record the piezometric head where a crest-tapping is installed. This develops within the separation pocket which forms immediately downstream of the crest or in the channel downstream of the structure. If downstream heads are to be used to determine discharges within the drowned flow range, an appropriately sited downstream stilling well or water level sensor tube shall be installed.

8.2.2 Stilling wells or water level sensor tubes shall be vertical and of sufficient height and depth to cover the full range of water levels. In field installations, they shall have a minimum height of 0,3 m above the maximum water levels expected. Stilling wells shall be connected to the appropriate head measurement positions by means of pipes.

8.2.3 Both the stilling well and the connecting (intake) pipe(s) shall be watertight. Where the well is provided for the accommodation of the float and counterweight recorder, it shall be of adequate size and depth.

8.2.4 The invert of the pipe shall be positioned at a distance of not less than 0,06 m below the lowest water level to be measured.

8.2.5 Pipe connections to the upstream and downstream head measurement positions shall terminate either flush with, or at right angles to the boundary of the approach and downstream channels. The channel boundary shall be plain and smooth (equivalent to carefully finished concrete) within a distance 10 times the

© ISO 2012 – All rights reserved

Documents
Document Sharing Hub
Full document details: BS ISO 4377:2012

diameter of the pipes from the centreline of the connection. The pipes may be oblique to the wall only if it is fitted with a removable cap or plate, set flush with the wall, through which a number of holes are drilled. The edges of these holes shall not be rounded or burred. Perforated cover plates are not recommended where weed or silt are likely to be present.

8.2.6 The static head at the separation pocket immediately downstream of the crest of the weir shall be transmitted to its gauge well by one of the following:

a) an array of tapping holes set into a plate covering a cavity in the crest of the weir block;

b) the underside of the plate supporting a manifold into which the static head is communicated via an array of feed tubes;

c) a horizontal conduit leading from the cavity through the weir block beneath the crest and terminating at the gauge well;

d) a flexible transmission tube to communicate static head within the manifold to the gauge well;

e) a watertight seal around the transmission tube to prevent static head within the cavity from influencing the static head transmitted from within the manifold.

The static head within the manifold may be at a different pressure because of leakage around the periphery of the cover plate.

These arrangements minimize the occurrence of silting within the communication path between the separation pocket and the gauge well and provide for the effective purging of the pipework by the occasional back-flushing of the system. For this purpose, a volume of water shall periodically be introduced into the gauge well. The modular value of h_{pe}/H_{1e} always lies within the range (40 ± 5) % and a check on this value during the modular flow conditions provides a sound method for determining whether the crest tapping is performing satisfactorily. If the value of this ratio is not within this range, the installation should be checked for leakage around the tapping plate and/or general blockage of the system (see 9.5).

Figure 3 shows the general arrangement for the crest-tapping installation. The size and disposition of the crest tapping holes is given in Table 2.

8.2.7 When using crest-tapping or downstream water level recorder data to estimate flows when flat-V weirs are operating in the drowned flow range it is essential that these are synchronized accurately with the upstream head recorder. This can be achieved by linking each water level sensor to a multi-channel logger with a single clock (see 9.6).

8.2.8 Adequate additional depth shall be provided in wells to avoid the danger of floats, if used, grounding either on the bottom or on any accumulation of silt or debris. A minimum distance of 0,5 m between the invert of the intake pipe and the bottom of the well is usually recommended.

The gauge well arrangement may include an intermediate chamber of similar size and proportions as the approach channel, to enable silt and other debris to settle out where it may be readily seen and removed.

8.2.9 The diameter of the connecting pipe or width of slot to the upstream well shall be sufficient to permit the water level in the well to follow the rise and fall of head without appreciable delay. Care should be taken however not to oversize the pipe, in order to ensure ease of maintenance and to damp out oscillations due to short period waves.

NOTE No firm rule can be laid down for determining the size of the connecting pipe to the upstream well, because this is dependent on a particular installation, e.g. whether the site is exposed and thus subject to waves, and whether a larger diameter well is required to house the floats of recorders. However, some practitioners and suppliers recommend that the area of the intake pipe or slot should be 0,1 % of the area of the stilling well. It is sometimes advantageous for maintenance purposes to use a larger diameter intake pipe. A removable plate with holes can be fixed to the watercourse end of the pipe to provide the required stilling (reduced area of intake) and to prevent the ingress of fauna.

© ISO 2012 – All rights reserved
Documents
Document Sharing Hub
Full document details: BS ISO 4377:2012

Table 2 — Arrangements for crest tappings

Crest tapping holes	Crest width b m			
	0,30 to 0,99	1,00 to 1,99	2,00 to 3,99	> 4,00
Hole diameter (mm)	5	5	10	10
Hole pitch (mm)	25	25	40	50
Number of tapping holes	3	5	7	9
Offset of centre hole from centre line of weir	0,1b	0,1b	0,1b	0,1b
Distance of the array of holes downstream of the crest (mm)	10	15	20	20
Bore diameter of manifold feeder tubes (mm)	5	5	10	10
Bore diameter of transmission tube (mm)	15	20	25	30

8.3 Zero setting

8.3.1 Accurate initial setting of the zeros of the head measuring devices with reference to the lowest level of the crest (apex of the v) and subsequent regular checks of these settings is essential.

8.3.2 An accurate means of checking the instrument zero at frequent intervals shall be provided. Bench marks, in the form of horizontal metal plates, can be set up on the top of the vertical side walls at the head monitoring points and in the gauge wells. These shall be accurately levelled to ensure their elevation relative to crest level is known. An alternative, or addition, to the external plate is a staff gauge zeroed to the weir crest.

Instrument set-up zeros can be checked with respect to these bench marks without the necessity of re-surveying the crest each time. These can also be used to check that the level inside the stilling well is the same as the level in the watercourse. This will provide a check on whether the intake pipe or stilling well have become silted up. Any settlement of the structure may, however, affect the relationships between crest and bench mark levels and it is advisable to make occasional checks on these relationships.

8.3.3 A zero check based on the water level (either when the flow ceases or just begins) is susceptible to serious errors due to surface tension effects and shall not be used.

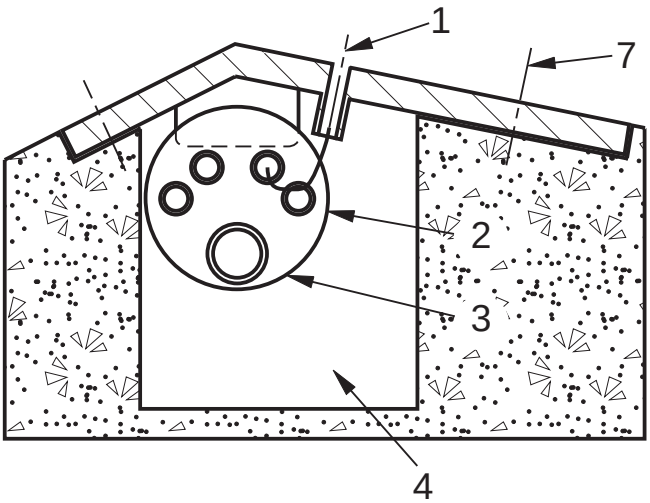

a) Cross-section through one crest tapping and showing part of the weir block

Figure 3 (*continued*)

© ISO 2012 – All rights reserved

Documents
Document Sharing Hub
Full document details: BS ISO 4377:2012

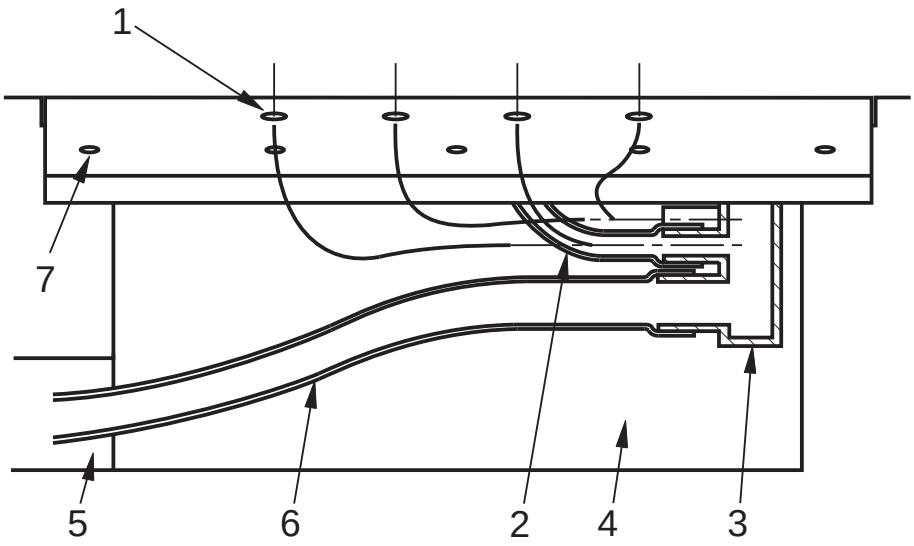

b) Downstream view with section through the manifold (item 3)

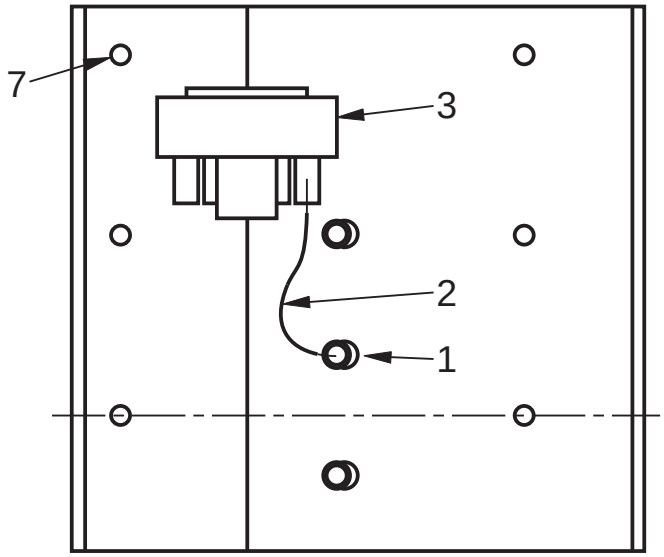

c) View of the underside of the crest plate

Key

1 crest tappings
2 feed tubes communicating crest head to the manifold (some shown as single lines only)
3 manifold [section in view b)]
4 cavity in the crest of the weir block
5 conduit leading to a gauge well
6 transmission tube (other end sealed within the conduit but communicating head in the manifold to the gauge well)
7 holes for screw-mounting the crest plate onto the weir block

Figure 3 — Arrangements for crest tappings

© ISO 2012 – All rights reserved
Documents
Document Sharing Hub
Full document details: BS ISO 4377:2012

8.3.4 Values for the crest cross-slope, m, and the gauge zero can be obtained by measuring the crest elevation at regular intervals along the crest line. A best fit straight line is positioned through the measured points for each side of the weir, and the intersection of these lines is the gauge zero level. The mean of the crest cross-slopes (m) for the two sides is used in the discharge formulae. For field installations, the use of standard levelling techniques is recommended, but precise micrometer or Vernier gauges shall be used for laboratory installation.

8.4 Location of head measurement sections

8.4.1 The approach flow to a flat-V weir is three-dimensional. Drawdown in the approach to the lowest crest elevation is more pronounced than in other positions across the width of the approach channel. This results in a depression in the water surface immediately upstream of the lowest crest position. Further upstream this depression is less pronounced and at a distance of 10 times the V-height, $10H'$, the water surface elevation across the width of the channel is constant. To achieve an accurate assessment of the upstream head, the tapping shall be set $10H'$ upstream of the crest line. $H' = b/2m$ is the difference between lowest and highest crest elevation, in metres. However, if this distance is less than $3\,H_{max}$ the tapping shall be set $3\,H_{max}$ upstream of the crest to avoid drawdown effects.

8.4.2 If other considerations necessitate siting the tapping closer to the weir, then corrections to the discharge coefficients are necessary if $H_1/p_1 > 1$. In all cases, a reduction in the coefficient is applicable and the percentage reductions depend on the tapping point location. The value of $H_1/p_1 > 1$ is given in Table 3.

8.4.3 Flat-V weirs can be used for gauging purposes in the drowned flow range if a tapping is incorporated at the crest. The centre position of the 10 crest tapping holes (see Table 2) shall be offset laterally from the position of the lowest crest elevation a distance of 0,1 times the total crest width (see Figure 3 and Table 2).

8.4.4 Alternatively, flat-V weirs can be used for gauging purposes in the drowned flow range if a downstream tapping is incorporated.

NOTE This method is not as accurate as the method described in 8.4.3.

The downstream tapping shall be $25H'$ or $3H_{1max}$, whichever is greater, downstream of the crest line and set at a level 100 mm above the downstream bed level.

Table 3 — Corrections to discharge coefficients

L_1	H_1/p_1		
	1	2	3
	Correction %		
$10H'$	0,0	0,0	0,0
$8H'$	0,0	0,3	0,6
$6H'$	0,0	0,6	0,9
$4H'$	0,0	0,8	1,2

H_1 is the upstream total head relative to lowest crest elevation, expressed in metres;

p_1 is the height of lowest crest elevation relative to upstream bed level, expressed in metres;

L_1 is the distance of upstream head measurement position from crest line, expressed in metres.

© ISO 2012 – All rights reserved

Documents
Document Sharing Hub
Full document details: BS ISO 4377:2012