BS ISO 4378-1:2017

BSI Standards Publication

Plain bearings — Terms, definitions, classification and symbols

Part 1: Design, bearing materials and their properties

Documents
Document Sharing Hub

Full document details: BS ISO 4378-1:2017

National foreword

This British Standard is the UK implementation of ISO 4378-1:2017. It supersedes BS ISO 4378-1:2009, which is withdrawn.

The UK participation in its preparation was entrusted to Technical Committee MCE/12, Plain bearings.

A list of organizations represented on this committee can be obtained on request to its secretary.

This publication does not purport to include all the necessary provisions of a contract. Users are responsible for its correct application.

© The British Standards Institution 2017
Published by BSI Standards Limited 2017

ISBN 978 0 580 92941 0

ICS 21.100.10; 01.040.21

Compliance with a British Standard cannot confer immunity from legal obligations.

This British Standard was published under the authority of the Standards Policy and Strategy Committee on 31 July 2017.

Amendments/corrigenda issued since publication

Date	Text affected

Documents
Document Sharing Hub

Full document details: BS ISO 4378-1:2017

INTERNATIONAL STANDARD

ISO 4378-1

Fourth edition
2017-07

Plain bearings — Terms, definitions, classification and symbols —

Part 1: Design, bearing materials and their properties

Paliers lisses — Termes, définitions, classification et symboles —

Partie 1: Conception, matériaux pour paliers et leurs propriétés

Reference number
ISO 4378-1:2017(E)

Documents
Document Sharing Hub

© ISO 2017

Full document details: BS ISO 4378-1:2017

COPYRIGHT PROTECTED DOCUMENT

© ISO 2017, Published in Switzerland

All rights reserved. Unless otherwise specified, no part of this publication may be reproduced or utilized otherwise in any form or by any means, electronic or mechanical, including photocopying, or posting on the internet or an intranet, without prior written permission. Permission can be requested from either ISO at the address below or ISO's member body in the country of the requester.

ISO copyright office
Ch. de Blandonnet 8 • CP 401
CH-1214 Vernier, Geneva, Switzerland
Tel. +41 22 749 01 11
Fax +41 22 749 09 47
copyright@iso.org
www.iso.org

© ISO 2017 – All rights reserved

Documents
Document Sharing Hub

Full document details: BS ISO 4378-1:2017

Contents

Page

Foreword ..... **iv**
Introduction ..... **v**
1 Scope **1**
2 Normative references **1**
3 Terms and definitions **1**
Bibliography **39**

© ISO 2017 – All rights reserved

Documents
Document Sharing Hub
Full document details: BS ISO 4378-1:2017

Foreword

ISO (the International Organization for Standardization) is a worldwide federation of national standards bodies (ISO member bodies). The work of preparing International Standards is normally carried out through ISO technical committees. Each member body interested in a subject for which a technical committee has been established has the right to be represented on that committee. International organizations, governmental and non-governmental, in liaison with ISO, also take part in the work. ISO collaborates closely with the International Electrotechnical Commission (IEC) on all matters of electrotechnical standardization.

The procedures used to develop this document and those intended for its further maintenance are described in the ISO/IEC Directives, Part 1. In particular, the different approval criteria needed for the different types of ISO documents should be noted. This document was drafted in accordance with the editorial rules of the ISO/IEC Directives, Part 2 (see www.iso.org/directives).

Attention is drawn to the possibility that some of the elements of this document may be the subject of patent rights. ISO shall not be held responsible for identifying any or all such patent rights. Details of any patent rights identified during the development of the document will be in the Introduction and/or on the ISO list of patent declarations received (see www.iso.org/patents).

Any trade name used in this document is information given for the convenience of users and does not constitute an endorsement.

For an explanation on the voluntary nature of standards, the meaning of ISO specific terms and expressions related to conformity assessment, as well as information about ISO's adherence to the World Trade Organization (WTO) principles in the Technical Barriers to Trade (TBT), see the following URL: www.iso.org/iso/foreword.html.

This document was prepared by Technical Committee ISO/TC 123, *Plain bearings*, Subcommittee SC 6, *Terms and common items*.

This fourth edition cancels and replaces the third edition (ISO 4378-1:2009), which has been technically revised. The following changes have been made:

— editorial revision of the document;

— addition of Figures 3, 4, 5, 6, 7, 8, 9, 18, 19, 36, 37, 40, 44 and 49 and technical revision of the other figures;

— revision of clause numbers.

A list of all the parts in the ISO 4378 series can be found on the ISO website.

© ISO 2017 – All rights reserved
Documents
Document Sharing Hub
Full document details: BS ISO 4378-1:2017

Introduction

As there is a large number of multiple designations in the domain of plain bearings, there is a considerable risk of error in the interpretation of standards and technical literature. This uncertainty leads to the continuous addition of supplementary designations, which only serves to increase the misunderstanding.

This document is an attempt to establish a uniform basic system of designations of design, bearing materials and their properties.

© ISO 2017 – All rights reserved

Documents
Document Sharing Hub
Full document details: BS ISO 4378-1:2017

Documents
Document Sharing Hub

Full document details: BS ISO 4378-1:2017

Plain bearings — Terms, definitions, classification and symbols —

Part 1:
Design, bearing materials and their properties

1 Scope

This document specifies the most commonly used terms relating to design, bearing materials and their properties of plain bearings with their definitions and classification.

For some terms and word combinations, their short forms are given, which can be used where they are unambiguous. Self-explanatory terms are given without definitions.

2 Normative references

There are no normative references in this document.

3 Terms and definitions

For the purposes of this document, the following terms and definitions apply.

ISO and IEC maintain terminological databases for use in standardization at the following addresses:

— IEC Electropedia: available at http://www.electropedia.org/

— ISO Online browsing platform: available at http://www.iso.org/obp

3.1 General terms

3.1.1
bearing
mechanical component by means of which a part in relative motion is supported and/or guided with respect to other parts of a mechanism

3.1.2
plain bearing
sliding bearing
bearing (3.1.1) in which the type of relative motion is sliding

3.1.3
plain bearing unit
mechanical component of a tribological system including a *plain bearing* (3.1.2), its supporting part (e.g. a housing), a shaft and a lubricating system

3.2 Types of plain bearings and classification

3.2.1 Classification according to the type of load

3.2.1.1
statically loaded plain bearing
plain bearing (3.1.2) operating under a load constant in magnitude and direction

© ISO 2017 – All rights reserved

Documents
Document Sharing Hub
Full document details: BS ISO 4378-1:2017

3.2.1.2
dynamically loaded plain bearing
plain bearing (3.1.2) operating under a load changing in magnitude and/or direction

3.2.2 Classification according to the direction of the acting load

3.2.2.1
plain journal bearing
journal bearing
plain bearing (3.1.2) in which the load acts radially to the axis of the rotating shaft

Note 1 to entry: See Figures 1 and 3.

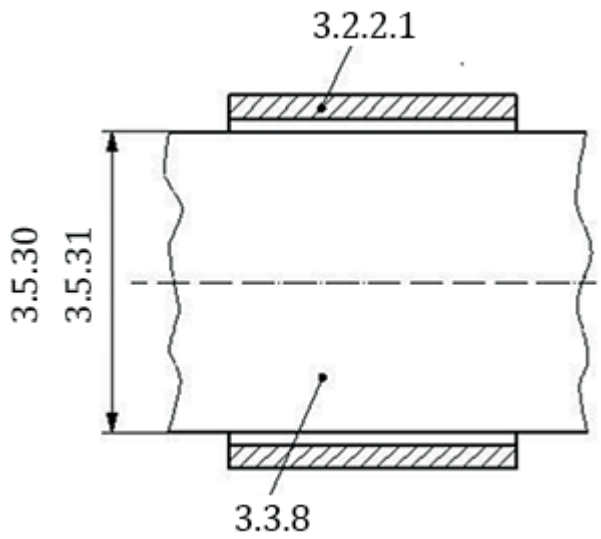

Figure 1 — Plain journal bearing

3.2.2.2
plain thrust bearing
thrust bearing
plain bearing (3.1.2) in which the load acts along the axis of the rotating shaft

Note 1 to entry: See Figure 2.

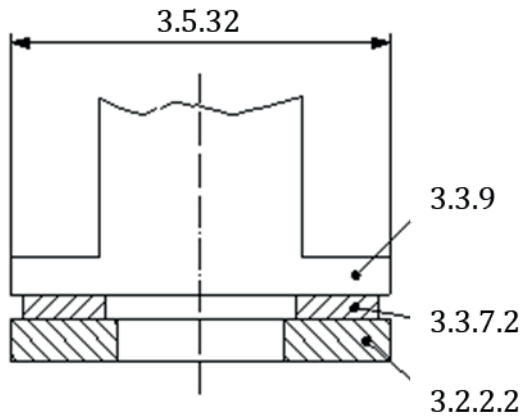

Figure 2 — Plain thrust bearing

© ISO 2017 – All rights reserved
Documents
Document Sharing Hub
Full document details: BS ISO 4378-1:2017

3.2.2.3
journal thrust bearing
flanged bearing
plain bearing (3.1.2) capable of supporting a load in both the axial and radial directions

3.2.3 Classification according to the type of lubrication

3.2.3.1
hydrodynamic bearing
plain bearing (3.1.2) operating under conditions of hydrodynamic lubrication

Note 1 to entry: See Figure 3.

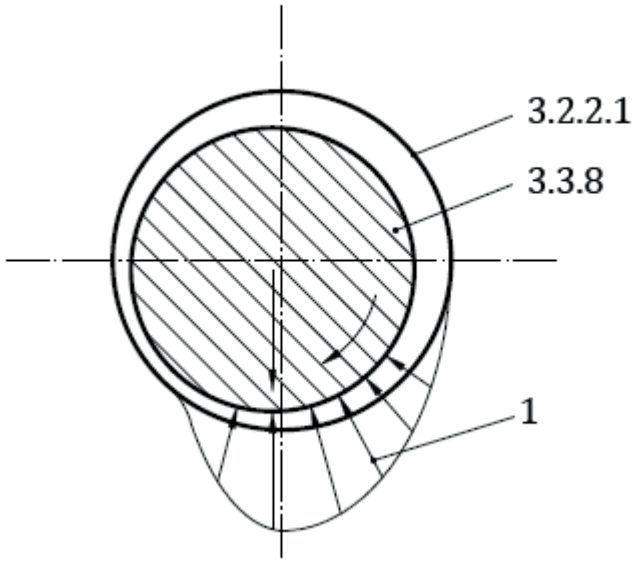

Key

1 oil film pressure distribution

Figure 3 — Hydrodynamic bearing

© ISO 2017 – All rights reserved

Documents
Document Sharing Hub
Full document details: BS ISO 4378-1:2017

3.2.3.2
hydrostatic bearing
externally pressurized bearing
plain bearing (3.1.2) operating under conditions of hydrostatic lubrication

Note 1 to entry: See Figure 4.

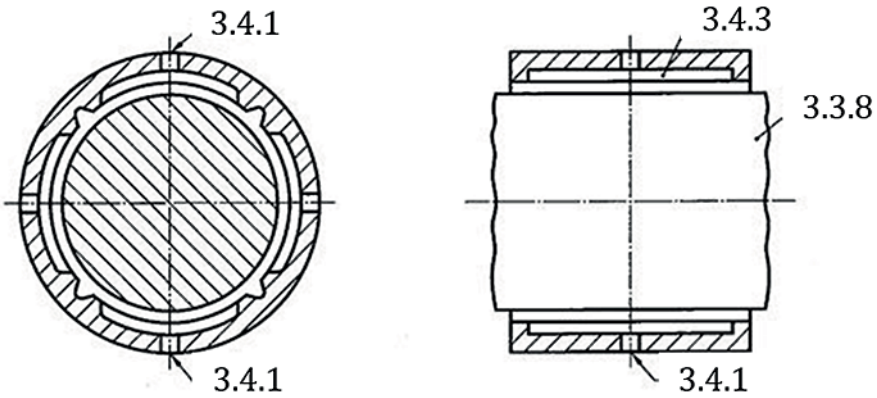

Figure 4 — Hydrostatic bearing

3.2.3.3
hydrodynamic gas bearing
hydrodynamic air bearing
plain bearing (3.1.2) operating under conditions of hydrodynamic gas/air lubrication

3.2.3.4
hydrostatic gas bearing
hydrostatic air bearing
plain bearing (3.1.2) operating under conditions of hydrostatic gas/air lubrication

© ISO 2017 – All rights reserved
Documents
Document Sharing Hub
Full document details: BS ISO 4378-1:2017

3.2.3.5
squeeze film bearing
plain bearing (3.1.2) in which complete separation of sliding surfaces is caused by the pressure developed in the lubricant film as a result of their approach in the direction normal to the surface

Note 1 to entry: See Figure 5.

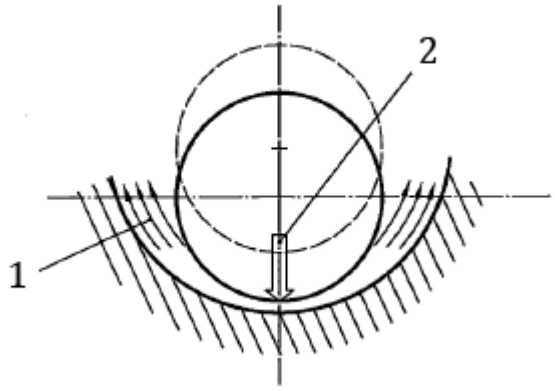

Key

1 lubricant

2 load

Figure 5 — Squeeze film bearing

3.2.3.6
hybrid bearing
plain bearing (3.1.2) operating under conditions of both hydrostatic and hydrodynamic lubrication

© ISO 2017 – All rights reserved

Documents
Document Sharing Hub
Full document details: BS ISO 4378-1:2017

3.2.3.7
solid-film lubricated bearing
plain bearing (3.1.2) operating with a solid lubricant

Note 1 to entry: See Figure 6.

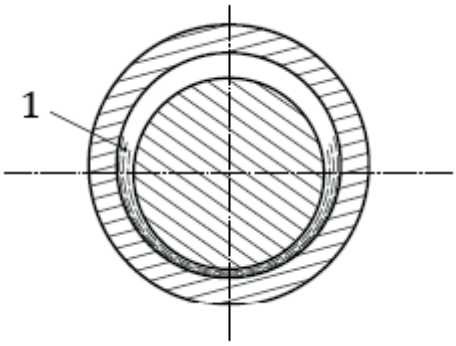

Key

1 solid lubricant

Figure 6 — Solid film lubricated bearing

3.2.3.8
unlubricated bearing
plain bearing (3.1.2) operating without a lubricant

3.2.3.9
self-lubricating bearing
plain bearing (3.1.2) lubricated by the *bearing material* (3.6.1), by the material components or by solid lubricant overlays

© ISO 2017 – All rights reserved
Documents
Document Sharing Hub
Full document details: BS ISO 4378-1:2017

3.2.3.10
porous self-lubricating bearing
sintered bearing
oil-impregnated sintered bearing
bearing (3.1.1), the sliding part of which consists of material having communicating pores filled with lubricant

Note 1 to entry: See Figure 7.

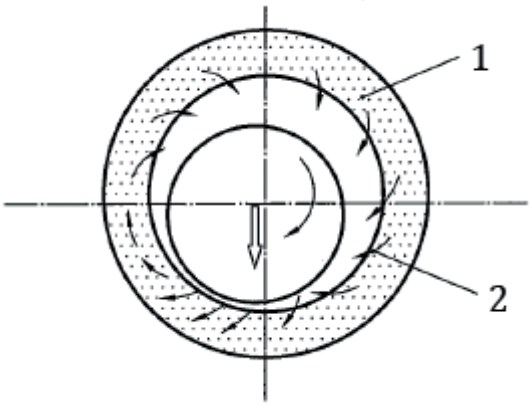

Key

1 porous bearing

2 oil flow

Figure 7 — Porous self-lubricating bearing

3.2.3.11
self-contained plain bearing assembly
bearing assembly with a lubricant reservoir and means of circulating the lubricant to the bearing surface

Note 1 to entry: See *plain bearing assembly* (3.2.4.9).

© ISO 2017 – All rights reserved

Documents
Document Sharing Hub
Full document details: BS ISO 4378-1:2017