BS ISO 4548-12:2017

BSI Standards Publication

Methods of test for full-flow lubricating oil filters for internal combustion engines

Part 12: Filtration efficiency using particle counting and contaminant retention capacity

Documents
Document Sharing Hub

Full document details: BS ISO 4548-12:2017

National foreword

This British Standard is the UK implementation of ISO 4548-12:2017.

The UK participation in its preparation was entrusted to Technical Committee MCE/21/6, Filters for volatile liquid fuels and lubricating oils.

A list of organizations represented on this committee can be obtained on request to its secretary.

This publication does not purport to include all the necessary provisions of a contract. Users are responsible for its correct application.

© The British Standards Institution 2017
Published by BSI Standards Limited 2017

ISBN 978 0 580 88924 0

ICS 27.020

Compliance with a British Standard cannot confer immunity from legal obligations.

This British Standard was published under the authority of the Standards Policy and Strategy Committee on 31 July 2017.

Amendments/corrigenda issued since publication

Date	Text affected

Documents
Document Sharing Hub

Full document details: BS ISO 4548-12:2017

INTERNATIONAL STANDARD

ISO 4548-12

Second edition
2017-05

Methods of test for full-flow lubricating oil filters for internal combustion engines —

Part 12: Filtration efficiency using particle counting and contaminant retention capacity

Méthodes d'essai des filtres à huile de lubrification à plein débit pour les moteurs à combustion interne —

Partie 12: Efficacité de filtration par comptage des particules et capacité de rétention des contaminants

Reference number
ISO 4548-12:2017(E)

Documents
Document Sharing Hub
© ISO 2017

Full document details: BS ISO 4548-12:2017

COPYRIGHT PROTECTED DOCUMENT

© ISO 2017, Published in Switzerland

All rights reserved. Unless otherwise specified, no part of this publication may be reproduced or utilized otherwise in any form or by any means, electronic or mechanical, including photocopying, or posting on the internet or an intranet, without prior written permission. Permission can be requested from either ISO at the address below or ISO's member body in the country of the requester.

ISO copyright office
Ch. de Blandonnet 8 • CP 401
CH-1214 Vernier, Geneva, Switzerland
Tel. +41 22 749 01 11
Fax +41 22 749 09 47
copyright@iso.org
www.iso.org

© ISO 2017 – All rights reserved

Documents
Document Sharing Hub

Full document details: BS ISO 4548-12:2017

Contents

Page

Foreword ... **iv**
Introduction ... **v**
1 Scope ... **1**
2 Normative references ... **1**
3 Terms and definitions ... **1**
4 Symbols ... **2**
5 Test equipment and materials ... **2**
5.1 Test equipment ... 2
5.1.1 Test rig ... 2
5.1.2 Online dilution and particle counting system ... 4
5.1.3 Timer ... 5
5.2 Test materials ... 5
5.2.1 Test contaminant ... 5
5.2.2 Test fluid ... 5
6 Accuracy of measuring instruments and test conditions ... **5**
7 Test rig validation ... **6**
7.1 Validation of filter test circuit ... 6
7.2 Validation of contaminant injection circuit ... 6
7.3 Validation of online dilution and particle counting system ... 7
8 Preliminary preparation ... **7**
8.1 Test filter assembly ... 7
8.2 Contaminant injection circuit ... 7
8.3 Filter test circuit ... 9
9 Test procedure ... **9**
9.1 Initial measurement ... 9
9.2 Performance test ... 11
10 Calculations and report of test results ... **12**
10.1 Calculations ... 12
10.1.1 General ... 12
10.1.2 Gravimetric levels ... 12
10.1.3 Filtration efficiencies ... 13
10.1.4 Micrometer ratings ... 13
10.1.5 Injected mass of contaminant ... 14
10.1.6 Non-retained mass of contaminant ... 14
10.1.7 Retained filter capacity ... 14
10.2 Test report ... 14
Annex A (normative) **Specification of test fluid for oil filter test** ... **15**
Annex B (informative) **Typical filter test report** ... **16**
Annex C (normative) **Filter efficiency calculations** ... **22**
Annex D (informative) **Round robin exercise** ... **25**
Bibliography ... **32**

© ISO 2017 – All rights reserved

Documents
Document Sharing Hub
Full document details: BS ISO 4548-12:2017

Foreword

ISO (the International Organization for Standardization) is a worldwide federation of national standards bodies (ISO member bodies). The work of preparing International Standards is normally carried out through ISO technical committees. Each member body interested in a subject for which a technical committee has been established has the right to be represented on that committee. International organizations, governmental and non-governmental, in liaison with ISO, also take part in the work. ISO collaborates closely with the International Electrotechnical Commission (IEC) on all matters of electrotechnical standardization.

The procedures used to develop this document and those intended for its further maintenance are described in the ISO/IEC Directives, Part 1. In particular the different approval criteria needed for the different types of ISO documents should be noted. This document was drafted in accordance with the editorial rules of the ISO/IEC Directives, Part 2 (see www.iso.org/directives).

Attention is drawn to the possibility that some of the elements of this document may be the subject of patent rights. ISO shall not be held responsible for identifying any or all such patent rights. Details of any patent rights identified during the development of the document will be in the Introduction and/or on the ISO list of patent declarations received (see www.iso.org/patents).

Any trade name used in this document is information given for the convenience of users and does not constitute an endorsement.

For an explanation on the meaning of ISO specific terms and expressions related to conformity assessment, as well as information about ISO's adherence to the World Trade Organization (WTO) principles in the Technical Barriers to Trade (TBT) see the following URL: www.iso.org/iso/foreword.html.

The committee responsible for this document is ISO/TC 70, *Internal combustion engines*, Subcommittee SC 7, *Tests for lubricating oil filters*.

This second edition cancels and replaces the first edition (ISO 4548-12:2000), which has been technically revised.

A list of all parts in the ISO 4548 series can be found on the ISO website.

© ISO 2017 – All rights reserved
Documents
Document Sharing Hub
Full document details: BS ISO 4548-12:2017

Introduction

ISO 4548 establishes standard test procedures for measuring the performance of full-flow lubricating oil filters for internal combustion engines. It has been prepared in separate parts, each part relating to a particular performance characteristic.

Together, the tests provide the information necessary to assess the characteristics of a filter, but if agreed between the purchaser and the manufacturer, the tests may be conducted separately.

© ISO 2017 – All rights reserved

Documents
Document Sharing Hub
Full document details: BS ISO 4548-12:2017

Documents
Document Sharing Hub

Methods of test for full-flow lubricating oil filters for internal combustion engines —

Part 12: Filtration efficiency using particle counting and contaminant retention capacity

1 Scope

This document specifies a multi-pass filtration test with continuous contaminant injection and using the online particle counting method for evaluating the performance of full-flow lubricating oil filters for internal combustion engines. The scope of this document is limited to steady state conditions and does not address fluctuations in the flow rate.

The test procedure determines the contaminant capacity of a filter, its particulate removal characteristics and differential pressure.

This test is intended for application to filter elements with an efficiency of less than 99 % at particle size greater than 10 µm.

NOTE Several test flow loops built into one test rig, or several test rigs, would be necessary to cover the complete flow range of 2 l/min to 600 l/min.

2 Normative references

The following documents are referred to in the text in such a way that some or all of their content constitutes requirements of this document. For dated references, only the edition cited applies. For undated references, the latest edition of the referenced document (including any amendments) applies.

ISO 2942, *Hydraulic fluid power — Filter elements — Verification of fabrication integrity and determination of the first bubble point*

ISO 3968, *Hydraulic fluid power — Filters — Evaluation of differential pressure versus flow characteristics*

ISO 4021, *Hydraulic fluid power — Particulate contamination analysis — Extraction of fluid samples from lines of an operating system*

ISO 4405, *Hydraulic fluid power — Fluid contamination — Determination of particulate contamination by the gravimetric method*

ISO 11171, *Hydraulic fluid power — Calibration of automatic particle counters for liquids*

ISO 11943, *Hydraulic fluid power —On-line automatic particle-counting systems for liquids — Methods of calibration and validation*

ISO 12103-1:2016, *Road vehicles — Test contamintants for filter evaluation — Part 1: Arizona test dust*

3 Terms and definitions

For the purposes of this document, the terms and definitions given in ISO 11841-1 and ISO 11841-2 and the following apply.

© ISO 2017 – All rights reserved

Documents
Document Sharing Hub
Full document details: BS ISO 4548-12:2017

ISO and IEC maintain terminological databases for use in standardization at the following addresses:

— IEC Electropedia: available at http://www.electropedia.org/

— ISO Online browsing platform: available at http://www.iso.org/obp

3.1
multi-pass test
test which requires the recirculation of unfiltered fluid through the filter element

3.2
base upstream gravimetric level
upstream contaminant concentration if no contaminant is recirculated

3.3
filtration efficiency
ability of the filter to retain particles expressed as the percentage of particles of a given size retained by the filter under test

3.4
overall efficiency
efficiency calculated from the average upstream and downstream particle counts

3.5
***X* % micrometer (µm) rating**
particle size corresponding to an overall efficiency of a given percentage *X*

Note 1 to entry: The unit given in µm should be in accordance with data presentation expressed in ISO 11171.

4 Symbols

The graphical symbols used in this document are in accordance with ISO 1219-1.

5 Test equipment and materials

5.1 Test equipment

5.1.1 Test rig

5.1.1.1 Generality

The test rig is shown diagrammatically in Figure 1. It shall comprise a filter test circuit and a contaminant injection circuit, as described in 5.1.1.2 and 5.1.1.3.

5.1.1.2 Filter test circuit

The filter test circuit shall include the following components:

a) reservoir (1) constructed with a conical bottom having an included angle of not more than 90 degrees and where the oil entering is diffused below the fluid surface;

b) oil pump (2) which does not alter the contaminant particle size distribution and which does not exhibit excessive flow pulses;

c) device, such as a filter head to accommodate spin-on filters, to connect the test filter (6) which can be by-passed or replaced by a straight section of the pipe;

d) system clean-up filter (9) capable of providing an initial system contamination level of less than 15 particles greater than 10 µm/ml;

© ISO 2017 – All rights reserved
Documents
Document Sharing Hub
Full document details: BS ISO 4548-12:2017

e) sampling valves in accordance with ISO 4021, for turbulent sampling upstream and downstream of the test filter, for on-line particle counting (18) and for gravimetric analysis (11);

f) pressure gauges in accordance with ISO 3968;

g) piping sized to ensure that turbulent mixing conditions exist throughout the filter test circuit.

5.1.1.3 Contaminant injection circuit

The contaminant injection circuit shall include the following components:

a) reservoir (12) constructed with a conical bottom having an included angle of not more than 90 degrees and where the oil entering is diffused below the fluid surface;

b) oil pump (13), centrifugal or of another type which does not alter the contaminant particle size distribution;

c) system clean-up filter (14) capable of providing either of the following conditions:

   1) an initial system contamination level of less than 1 000 particles per millilitre having a size greater than 10 µm;

   2) a gravimetric level less than 2 % of the calculated level at which the test is being conducted, measured in accordance with the gravimetric method described in ISO 4405;

d) piping sized to ensure that turbulent mixing conditions exist throughout the contaminant injection circuit.

© ISO 2017 – All rights reserved

Documents
Document Sharing Hub
Full document details: BS ISO 4548-12:2017

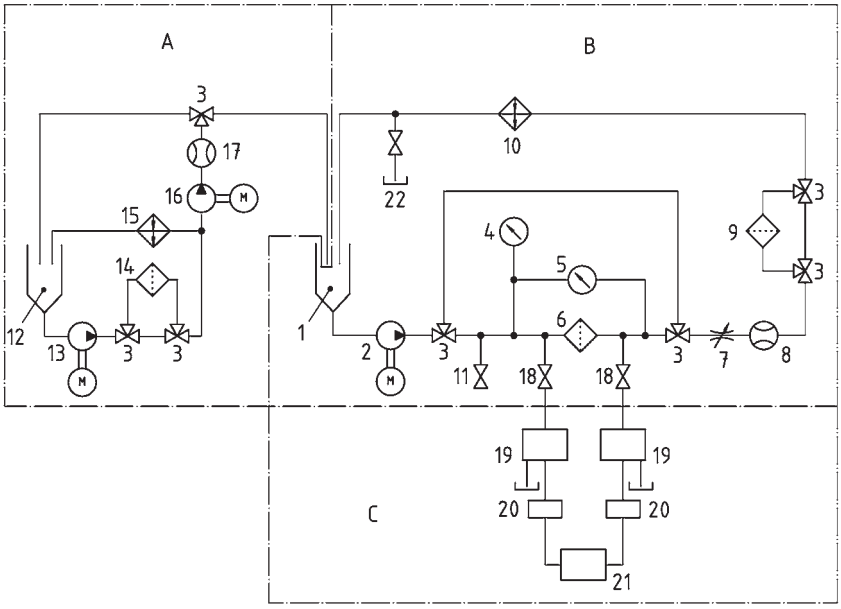

Key

A contaminant injection circuit

B filter test circuit

C dilution and counting system

1 reservoir incorporating a thermostatically controlled heater

2 pump

3 three-way valve

4 pressure gauge

5 differential pressure gauge

6 test filter

7 throttle valve (for pressure regulation)

8 flow meter

9 clean-up filter

10 heat exchanger

11 sampling valve

12 reservoir incorporating a thermostatically controlled heater

13 pump

14 clean-up filter

15 heat exchanger

16 injection pump

17 flow meter

18 sampling valve

19 dilution system

20 particle sensor

21 particle counter

22 volume control valve

Figure 1 — Diagrammatic arrangement of test rig

5.1.2 Online dilution and particle counting system

The online dilution and particle counting system shall include the following components:

a) online sample delivery pipework sized to maintain a fluid velocity which will prevent silting;

b) dilution system (19) comprising a reservoir, pump, clean-up filters, flowmeters and flow regulation valves;

c) two optical particle sensors (20) connected to a counter (21) having a minimum of five channels.

© ISO 2017 – All rights reserved
Documents
Document Sharing Hub
Full document details: BS ISO 4548-12:2017

5.1.3 Timer

A timer capable of measuring minutes and seconds.

5.2 Test materials

5.2.1 Test contaminant

5.2.1.1 Contaminant grade

The contaminant shall be in accordance with the specification given for ISO 12103-1, A.3 medium grade test dust.

5.2.1.2 Contaminant preparation

The test dust shall be pre-dried in quantities not larger than 200 g for at least 1 h at 105 °C ± 5 °C and cooled to room temperature. Maintain in a desiccator until required for use.

For quantities greater than 200 g, dry for at least 30 min per additional 100 g. For use in the test system, mix the test dust into the test fluid, mechanically agitate, then disperse ultrasonically with a power density of 3 000 W/m^2 to 10 000 W/m^2 (see ISO 16889).

5.2.2 Test fluid

The test fluid shall have a petroleum base and conform to the specifications given in Annex A.

6 Accuracy of measuring instruments and test conditions

The measuring instruments shall be capable of measuring to the levels of accuracy given in Table 1. The last column in Table 1 gives the limits within which the test conditions shall be maintained.

Table 1 — Instrument accuracy and test condition variation

Test condition	Units	Instrument reading accuracy	Allowed test condition variation
Test flow rate	l/min	±2 %	±5 %
Injection flow rate	ml/min	±2 %	±5 %
Pressure	Pa	±5 %	—
Temperature	°C	±1 °C	±2 °C
Volume	l	±5 %	±10 %
Base upstream gravimetric level	mg/l	—	±10 %
Initial conductivity	pS/m	±10 %	1 500 ± 500
Final conductivity	pS/m	±10 %	
Viscosity [a]	mm^2/s	±5 %	/
Counting flow rate (APC)	ml/min	±1,5 %	±3 %
Injection circuit volume	l	±2 %	/
Test circuit volume	l	±2 %	±5 %
Mass	g	0,1 mg	/
Time	sec	1 s	

[a] The viscosity of the test liquid should be checked at regular intervals to ensure that the test is conducted at a liquid temperature which corresponds to a viscosity of 15 ± 1 mm^2/s.

© ISO 2017 – All rights reserved

AVA Documents Document Sharing Hub
Full document details: BS ISO 4548-12:2017

7 Test rig validation

NOTE These validation procedures reveal the effectiveness of the test rig in maintaining contaminant entrainment and/or preventing contaminant size modification.

7.1 Validation of filter test circuit

NOTE The filter test circuit is validated at the minimum flow rate at which the circuit will be operated.

7.1.1 Install a straight section of pipe in place of a test filter during the validation procedure.

7.1.2 For flows of not more than 60 l/min, adjust the total circuit volume to be numerically equal to one-half of the value of the minimum flow volume per minute through the filter, with a minimum of 6 l. For flows higher than 60 l/min, adjust the total circuit volume to be numerically equal to one-quarter of the value of the minimum flow volume per minute through the filter.

7.1.3 Contaminate the fluid to the calculated gravimetric level of 5 mg/l using ISO 12103-1, A.3 test dust.

NOTE This contamination level is below the coincidence limit of automatic particle counters.

7.1.4 Circulate the fluid in the test system for 1 h and obtain downstream cumulative counts at 10 µm and 20 µm without online dilution at the 10 min sample intervals.

7.1.5 Calculate and record the online count (C_0) in particles per millilitre, using Formula (1):

$$C_{\mathrm{o}} = \frac{N_{\mathrm{c}}}{V} \tag{1}$$

where

N_{c} is the cumulative count for the selected sample period, in number of particles;

V is the volume of fluid in millilitres passed through the particle counter sensor during the sample period.

7.1.6 Accept the validation test only if each particle count obtained at 10 µm and 20 µm does not deviate by more than 10 % from the average particle counts for these sizes and complies with ISO 11943.

7.2 Validation of contaminant injection circuit

7.2.1 Validate the contaminant injection circuit at the maximum volume and the maximum gravimetric level to be used.

7.2.2 Add the required quantity of contaminant in a slurry form to the injection circuit fluid and circulate for sufficient time to completely disperse the contaminant.

NOTE It is possible that not all systems be able to disperse contaminant at the same rate. A period of 10 min to 20 min can be necessary for complete dispersion.

7.2.3 Extract fluid samples at the point where the injection fluid is discharged into the filter test circuit reservoir at 30 min intervals over 2 h and analyse each sample gravimetrically.

These samples should be taken at the intended test injection flow rate.

7.2.4 Accept the validation test only if the gravimetric level of each sample is within ±5 % of the average of the four samples and if this average is within ±5 % of the gravimetric value selected in 7.2.2.

© ISO 2017 – All rights reserved
AVA Documents Document Sharing Hub
Full document details: BS ISO 4548-12:2017