BS ISO 500-3:2014

BSI Standards Publication

Agricultural tractors — Rear-mounted power take-off types 1, 2, 3 and 4

Part 3: Main PTO dimensions and spline dimensions, location of PTO

bsi.

...making excellence a habit.™

Document Sharing Hub

Full document details: BS ISO 500-3:2014

National foreword

This British Standard is the UK implementation of ISO 500-3:2014. It supersedes BS ISO 500-3:2004 which is withdrawn.

The UK participation in its preparation was entrusted to Technical Committee AGE/6, Agricultural tractors and forestry machinery.

A list of organizations represented on this committee can be obtained on request to its secretary.

This publication does not purport to include all the necessary provisions of a contract. Users are responsible for its correct application.

© The British Standards Institution 2014. Published by BSI Standards Limited 2014

ISBN 978 0 580 74593 5

ICS 65.060.10

Compliance with a British Standard cannot confer immunity from legal obligations.

This British Standard was published under the authority of the Standards Policy and Strategy Committee on 30 April 2014.

Amendments issued since publication

Date	Text affected

Documents
Document Sharing Hub

Full document details: BS ISO 500-3:2014

INTERNATIONAL STANDARD

ISO 500-3

Second edition
2014-04-01

Agricultural tractors — Rear-mounted power take-off types 1, 2, 3 and 4 —

Part 3: Main PTO dimensions and spline dimensions, location of PTO

Tracteurs agricoles — Prises de force montées à l'arrière des types 1, 2, 3 et 4 —

Partie 3: Dimensions principales de la prise de force et dimensions des cannelures, emplacement de la prise de force

Reference number
ISO 500-3:2014(E)

Documents
Document Sharing Hub

© ISO 2014

Full document details: BS ISO 500-3:2014

COPYRIGHT PROTECTED DOCUMENT

© ISO 2014

All rights reserved. Unless otherwise specified, no part of this publication may be reproduced or utilized otherwise in any form or by any means, electronic or mechanical, including photocopying, or posting on the internet or an intranet, without prior written permission. Permission can be requested from either ISO at the address below or ISO's member body in the country of the requester.

ISO copyright office
Case postale 56 • CH-1211 Geneva 20
Tel. + 41 22 749 01 11
Fax + 41 22 749 09 47
E-mail copyright@iso.org
Web www.iso.org

Published in Switzerland

© ISO 2014 – All rights reserved

Documents
Document Sharing Hub

Full document details: BS ISO 500-3:2014

Contents

Page

Foreword ..... **iv**
1 Scope **1**
2 Normative references **1**
3 PTO location **1**
4 Manufacturing requirements — Main PTO and spline dimensions **2**
Bibliography **16**

© ISO 2014 – All rights reserved

Documents
Document Sharing Hub
Full document details: BS ISO 500-3:2014

Foreword

ISO (the International Organization for Standardization) is a worldwide federation of national standards bodies (ISO member bodies). The work of preparing International Standards is normally carried out through ISO technical committees. Each member body interested in a subject for which a technical committee has been established has the right to be represented on that committee. International organizations, governmental and non-governmental, in liaison with ISO, also take part in the work. ISO collaborates closely with the International Electrotechnical Commission (IEC) on all matters of electrotechnical standardization.

The procedures used to develop this document and those intended for its further maintenance are described in the ISO/IEC Directives, Part 1. In particular the different approval criteria needed for the different types of ISO documents should be noted. This document was drafted in accordance with the editorial rules of the ISO/IEC Directives, Part 2 (see www.iso.org/directives).

Attention is drawn to the possibility that some of the elements of this document may be the subject of patent rights. ISO shall not be held responsible for identifying any or all such patent rights. Details of any patent rights identified during the development of the document will be in the Introduction and/or on the ISO list of patent declarations received (see www.iso.org/patents).

Any trade name used in this document is information given for the convenience of users and does not constitute an endorsement.

For an explanation on the meaning of ISO specific terms and expressions related to conformity assessment, as well as information about ISO's adherence to the WTO principles in the Technical Barriers to Trade (TBT) see the following URL: Foreword - Supplementary information

The committee responsible for this document is ISO/TC 23, *Tractors and machinery for agriculture and forestry*, Subcommittee SC 4, *Tractors*.

This second edition cancels and replaces the first edition (ISO 500-3:2004), of which it constitutes a minor revision.

ISO 500 consists of the following parts, under the general title *Agricultural tractors — Rear-mounted power take-off types 1, 2, 3 and 4*:

— *Part 1: General specifications, safety requirements, dimensions for master shield and clearance zone*

— *Part 2: Narrow-track tractors, dimensions for master shield and clearance zone*

— *Part 3: Main PTO dimensions and spline dimensions, location of PTO*

© ISO 2014 – All rights reserved
Documents
Document Sharing Hub
Full document details: BS ISO 500-3:2014

INTERNATIONAL STANDARD ISO 500-3:2014(E)

Agricultural tractors — Rear-mounted power take-off types 1, 2, 3 and 4 —

Part 3: Main PTO dimensions and spline dimensions, location of PTO

1 Scope

This part of ISO 500 specifies the manufacturing requirements for, and the location of, rear-mounted power take-offs (PTOs) of types 1, 2, 3, and 4 on agricultural tractors.

2 Normative references

The following documents, in whole or in part, are normatively referenced in this document and are indispensable for its application. For dated references, only the edition cited applies. For undated references, the latest edition of the referenced document (including any amendments) applies.

ISO 6508 (all parts), *Metallic materials — Rockwell hardness test*

3 PTO location

The location of the PTO axis shall lie within the shaded rectangle shown in Figure 1 and in accordance with Table 1, parallel to the longitudinal axis of the tractor and should be parallel to the ground within ±3°.

The values of the dimension h are for normal agricultural applications (see Figure 1 and Table 1). On tractors especially designed for high ground clearance, such as working in standing vegetable crops or sugar cane, h_{max}, can exceed the given values. On agricultural tractors designed for low ground clearance, such as lawn mowing or ground care which require a low centre of gravity, for narrow-track tractors, and for track-laying tractors, h_{min}, can be less than the given values.

For tractors that can accommodate multiple PTO types, h_{max} shall be the value for the largest PTO type specified for the tractor.

© ISO 2014 – All rights reserved

Documents
Document Sharing Hub
Full document details: BS ISO 500-3:2014

Dimensions in millimetres

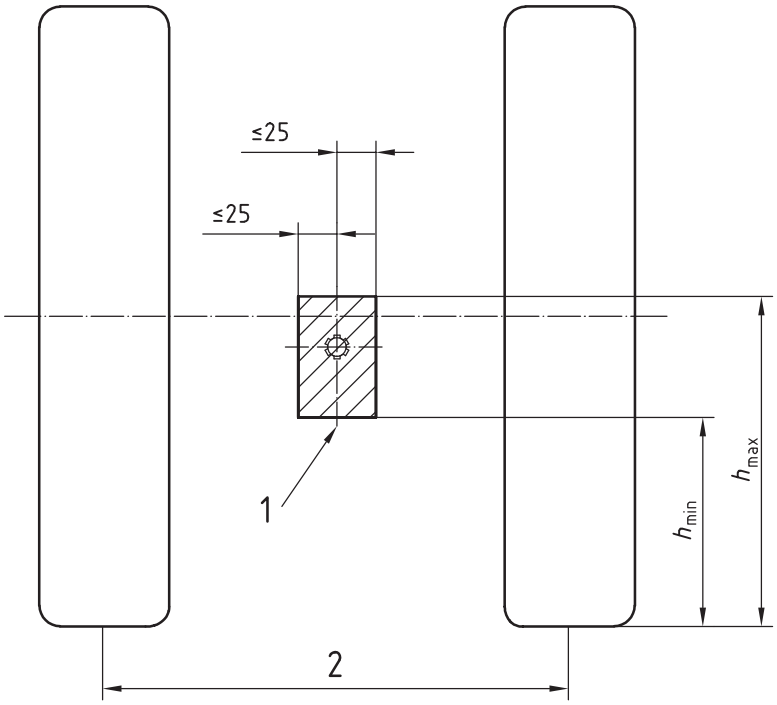

Key

1 centre line of tractor

2 track width

Figure 1 — PTO location

Table 1 — PTO location

Dimensions in millimetres

PTO type	h_{min}	h_{max}
1	480	800
2	530	900
3	600	1 000
4	600	1 000

4 Manufacturing requirements — Main PTO and spline dimensions

The dimensions of the rear PTO on agricultural tractors and the mating part of the PTO drive shaft shall comply with:

— Figure 2 and Table 2, for PTO dimensions;

— Figure 3 and Table 3, for external, straight-sided spline dimensions — Type 1;

— Figure 4 and Table 4, for internal straight-sided spline dimensions — Type 1;

— Figure 5 and Table 5, for external, involute spline dimensions — Type 2;

— Figure 6 and Table 6, for internal, involute spline dimensions — Type 2;

— Figure 7 and Table 7, for external, involute spline dimensions — Type 3;

© ISO 2014 – All rights reserved
Documents
Document Sharing Hub
Full document details: BS ISO 500-3:2014