BS ISO 5091-3:2023

BSI Standards Publication

Structural intervention of existing concrete structures using cementitious materials

Part 3: Bottom-surface (soffit) underlaying

Documents
Document Sharing Hub

Full document details: BS ISO 5091-3:2023

National foreword

This British Standard is the UK implementation of ISO 5091-3:2023.

The UK participation in its preparation was entrusted to Technical Committee B/517/8, Protection and repair of concrete structures.

A list of organizations represented on this committee can be obtained on request to its committee manager.

Contractual and legal considerations

This publication has been prepared in good faith, however no representation, warranty, assurance or undertaking (express or implied) is or will be made, and no responsibility or liability is or will be accepted by BSI in relation to the adequacy, accuracy, completeness or reasonableness of this publication. All and any such responsibility and liability is expressly disclaimed to the full extent permitted by the law.

This publication is provided as is, and is to be used at the recipient's own risk.

The recipient is advised to consider seeking professional guidance with respect to its use of this publication.

This publication is not intended to constitute a contract. Users are responsible for its correct application.

© The British Standards Institution 2023
Published by BSI Standards Limited 2023

ISBN 978 0 539 14359 1

ICS 91.080.40

Compliance with a British Standard cannot confer immunity from legal obligations.

This British Standard was published under the authority of the Standards Policy and Strategy Committee on 31 August 2023.

Amendments/corrigenda issued since publication

Date	Text affected

Documents
Document Sharing Hub

Full document details: BS ISO 5091-3:2023

INTERNATIONAL STANDARD

ISO 5091-3

First edition
2023-07

Structural intervention of existing concrete structures using cementitious materials —

Part 3: Bottom-surface (soffit) underlaying

Intervention structurelle sur les structures en béton existantes utilisant des matériaux cimentaires —

Partie 3: Recouvrement de la surface inférieure (soffite)

Reference number
ISO 5091-3:2023(E)

Documents
Document Sharing Hub
© ISO 2023

Full document details: BS ISO 5091-3:2023

COPYRIGHT PROTECTED DOCUMENT

© ISO 2023

All rights reserved. Unless otherwise specified, or required in the context of its implementation, no part of this publication may be reproduced or utilized otherwise in any form or by any means, electronic or mechanical, including photocopying, or posting on the internet or an intranet, without prior written permission. Permission can be requested from either ISO at the address below or ISO's member body in the country of the requester.

ISO copyright office
CP 401 • Ch. de Blandonnet 8
CH-1214 Vernier, Geneva
Phone: +41 22 749 01 11
Email: copyright@iso.org
Website: www.iso.org

Published in Switzerland

© ISO 2023 – All rights reserved

Documents
Document Sharing Hub

Full document details: BS ISO 5091-3:2023

Contents

Page

Foreword ..... **v**
Introduction ..... **vi**
1 Scope **1**
2 Normative references **1**
3 Terms and definitions **1**
4 Investigation of existing structure **2**
4.1 General 2
4.2 Investigation 3
4.2.1 Investigation using documents, records 3
4.2.2 On-site investigation 3
5 Intervention design **3**
5.1 General 3
5.2 Structural plan 4
5.3 Structural details 4
6 Materials **4**
6.1 General 4
6.2 Materials in existing structure 4
6.3 Materials used in repairing or strengthening parts 4
6.3.1 General 4
6.3.2 Cementitious materials 4
6.3.3 Reinforcing materials 5
6.3.4 Bonding products 5
6.4 Characteristic values and design values of materials for repaired or strengthened parts 5
6.4.1 General 5
6.4.2 Cementitious materials 5
6.4.3 Reinforcing materials 5
6.4.4 Bonding products 5
7 Actions **5**
7.1 General 5
7.2 Actions for intervention design 5
8 Performance verification for repaired or strengthened structure **6**
8.1 General 6
8.2 Calculation of response values 6
8.2.1 General 6
8.2.2 Modelling of structure 6
8.2.3 Structural analysis 6
8.2.4 Calculation of design response values 6
8.3 Durability verification 8
8.4 Safety verification 8
8.4.1 General 8
8.4.2 Verification related to failure 8
8.4.3 Verification related to fatigue failure 8
8.5 Serviceability verification 9
8.5.1 General 9
8.5.2 Verification related to appearance 9
8.5.3 Verification related to displacement and deformation 9
8.6 Restorability verification 9
8.7 Structural details 9
8.7.1 Thickness of bottom-surface (soffit) underlaying parts 9
8.7.2 Cover 10

AVA Documents
Document Sharing Hub

© ISO 2023 – All rights reserved

Full document details: BS ISO 5091-3:2023

8.7.3 Space between reinforcing materials ... 10
8.7.4 Joints for reinforcing materials ... 10
8.7.5 Anchoring and securing methods of reinforcing materials ... 10

9 Construction ... 10
9.1 General ... 10
9.2 Prior investigation and construction plan ... 10
9.3 Surface treatment ... 11
9.4 Assembly of reinforcing materials ... 12
9.5 Surface preparation ... 12
9.6 Storage, mixing and transportation of underlaying materials ... 12
9.7 Execution of underlaying ... 13
9.8 Curing ... 13
9.9 Quality control ... 13
9.10 Inspection ... 13

10 Records ... 14

11 Maintenance ... 14

Annex A (informative) **Examples of design and execution procedure ... 15**

Bibliography ... 28

© ISO 2023 – All rights reserved

Documents
Document Sharing Hub
Full document details: BS ISO 5091-3:2023

Foreword

ISO (the International Organization for Standardization) is a worldwide federation of national standards bodies (ISO member bodies). The work of preparing International Standards is normally carried out through ISO technical committees. Each member body interested in a subject for which a technical committee has been established has the right to be represented on that committee. International organizations, governmental and non-governmental, in liaison with ISO, also take part in the work. ISO collaborates closely with the International Electrotechnical Commission (IEC) on all matters of electrotechnical standardization.

The procedures used to develop this document and those intended for its further maintenance are described in the ISO/IEC Directives, Part 1. In particular, the different approval criteria needed for the different types of ISO document should be noted. This document was drafted in accordance with the editorial rules of the ISO/IEC Directives, Part 2 (see www.iso.org/directives).

ISO draws attention to the possibility that the implementation of this document may involve the use of (a) patent(s). ISO takes no position concerning the evidence, validity or applicability of any claimed patent rights in respect thereof. As of the date of publication of this document, ISO had not received notice of (a) patent(s) which may be required to implement this document. However, implementers are cautioned that this may not represent the latest information, which may be obtained from the patent database available at www.iso.org/patents. ISO shall not be held responsible for identifying any or all such patent rights.

Any trade name used in this document is information given for the convenience of users and does not constitute an endorsement.

For an explanation of the voluntary nature of standards, the meaning of ISO specific terms and expressions related to conformity assessment, as well as information about ISO's adherence to the World Trade Organization (WTO) principles in the Technical Barriers to Trade (TBT), see www.iso.org/iso/foreword.html.

This document was prepared by Technical Committee ISO/TC 71, *Concrete, reinforced concrete and pre-stressed concrete*, Subcommittee SC 7, *Maintenance and repair of concrete structures*.

A list of all parts in the ISO 5091 series can be found on the ISO website.

Any feedback or questions on this document should be directed to the user's national standards body. A complete listing of these bodies can be found at www.iso.org/members.html.

© ISO 2023 – All rights reserved

Documents
Document Sharing Hub
Full document details: BS ISO 5091-3:2023

Introduction

As a repairing and strengthening method, attaching of cementitious material layer to surface of existing concrete structures has been widely accepted. Since the cementitious layer does not have enough tensile strength, tension reinforcement is generally placed in the cementitious layer. There are two types of attaching way. For the first way, the cementitious layer is attached either on top surface or bottom surface of horizontal concrete members, especially slabs, while, for the second way, the cementitious layer is attached to jacket vertical concrete members, especially columns. There has not been any ISO standard on design, execution, and maintenance for this method with attaching cementitious layer. The ISO 5091 series serves as the first ISO standard for the intervention by attaching cementitious material layer with tension reinforcement inside.

At the same time, the ISO 5091 series is the first ISO standard developed for a specific intervention method, which conforms to the umbrella code, ISO 16311, especially ISO 16311-3 and ISO 16311-4.

The ISO 5091 series consists of four parts. ISO 5091-1 provides the issues common to all three parts, while ISO 5091-2, 3 and 4 provide the issues specific to each attaching way of cementitious material layers.

Generally, polymer hydraulic cement mortar (PCM) is used as the underlaying material. This is because PCM bonds well with the existing members and has large tensile strain at cracking, and makes the penetration of degradation factors less likely. As reinforcing materials, reinforcing steel, welded wire mesh, FRP grid are used.

Bottom-surface (soffit) underlaying has evolved as a strengthening method for fatigue of RC decks. drawing attention because of examples of applications like the one shown in Figure 1. The members that are currently repaired or strengthened using this method include RC decks, tunnel linings, box culverts, waterways and beams. In this document, the latest information about the design and construction of the bottom-surface (soffit) underlaying method using underlaying materials has been collected and the best possible standards are presented.

The ISO 5091 series can serve as a practical standard for construction industry, such as client, design consultant and general contractor, to apply the structural intervention with externally attached cementitious layer. Additional technical information, which is not provided explicitly in the ISO 5091 series, needs to be provided in each application case with consideration of the provisions of the ISO 5091 series.

© ISO 2023 – All rights reserved
Documents
Document Sharing Hub
Full document details: BS ISO 5091-3:2023

Structural intervention of existing concrete structures using cementitious materials —

Part 3:
Bottom-surface (soffit) underlaying

1 Scope

This document specifies the standards for design and construction using the bottom-surface (soffit) underlaying method. Bottom-surface (soffit) underlaying is a method whereby reinforcing materials are placed on the bottom surface of the slabs or beams whose performance is lower than required and the improvement of durability, serviceability, safety and other performance of the members is achieved by the integrity between the reinforcing materials and existing members.

This document specifies structural intervention of existing concrete structures using cementitious materials design and execution principles, and strategies for defects and on-going deterioration including, but not limited to:

a) mechanical actions, e.g. fatigue, impact, overloading, movement caused by settlement, blast, vibration, and seismic actions;

b) chemical and biological actions from environments, e.g. sulfate attack, alkali-aggregate reaction;

c) physical actions, e.g. freeze–thaw, thermal cracking, moisture movement, salt crystallization, fire, and erosion;

d) reinforcement corrosion;

e) original construction defects that remained unaddressed from the time of construction.

2 Normative references

The following documents are referred to in the text in such a way that some or all of their content constitutes requirements of this document. For dated references, only the edition cited applies. For undated references, the latest edition of the referenced document (including any amendments) applies.

ISO 5091-1:2023, *Structural intervention of existing concrete structures using cementitious materials — Part 1: General principles*

ISO 22966, *Execution of concrete structures*

3 Terms and definitions

For the purposes of this document, the following terms and definitions apply.

ISO and IEC maintain terminology databases for use in standardization at the following addresses:

— ISO Online browsing platform: available at https://www.iso.org/obp

— IEC Electropedia: available at https://www.electropedia.org/

© ISO 2023 – All rights reserved

Documents
Document Sharing Hub
Full document details: BS ISO 5091-3:2023

3.1
bottom-surface (soffit) underlaying
method in which the thickness of the structural element associated with the bottom surface of the existing concrete is increased using cementitious materials, which will generally be reinforced

Note 1 to entry: The technique enhances the performance (e.g. strength, stiffness) of the existing concrete structure and is applicable to highway bridge decks, tunnel linings, box culverts/waterway structures, beams, etc.

3.2
bonding product
material, such as a primer or adhesive, that is applied to bond concrete and mortar

Note 1 to entry: The grouting material for bonding concrete and reinforcing material is also included in this term.

3.3
filling material
material injected to fill the gap between a reinforcing material, such as intermediate penetrating tie, and concrete

3.4
filling property
degree of filling of cracks and adhesion of crack filling material to substrate

3.5
reinforcing material
steel or FRP material used to sustain, restore or improve the mechanical performance of a structure

3.6
polymer hydraulic cement mortar
hydraulic composition made cementitious materials and fine aggregate modified by the addition of a polymer

3.7
FRP grid
resin-impregnated FRP reinforcing materials formed into a grid shape

3.8
design response value
value of structural response obtained by numerical analysis on design process, such as sectional force and deformation

3.9
design limit value
design value for quantified limit state on design process, such as strength of element, allowable crack width

3.10
maintainability
ability of a structure to meet service objectives with a minimum expenditure of maintenance effort under service conditions in which maintenance and repair are performed

4 Investigation of existing structure

4.1 General

The study of the existing structure for which to consider intervention using the bottom-surface (soffit) underlaying method shall be as set forth in ISO 5091-1:2023, Clause 4.

© ISO 2023 – All rights reserved
Documents
Document Sharing Hub
Full document details: BS ISO 5091-3:2023

4.2 Investigation

4.2.1 Investigation using documents, records

When the climatic conditions, environmental conditions and geographical conditions of the local site are studied using documents, records, etc., the study shall be conducted in accordance with ISO 5091-1:2023, 4.2.1.

4.2.2 On-site investigation

The on-site study on degradation, damage and initial defects of the existing concrete structure shall be conducted in accordance with ISO 5091-1:2023, 4.2.2.

The work environment and other relevant conditions of the site shall be checked in advance.

5 Intervention design

5.1 General

When repairing or strengthening a concrete structure using bottom-surface (soffit) underlaying as shown in Figure 1, it shall be verified by means of an appropriate method that the structure fulfils the required performance for the required period. Also, the environment for the intervention construction, constructability, post-intervention maintainability and economy shall be taken into consideration.

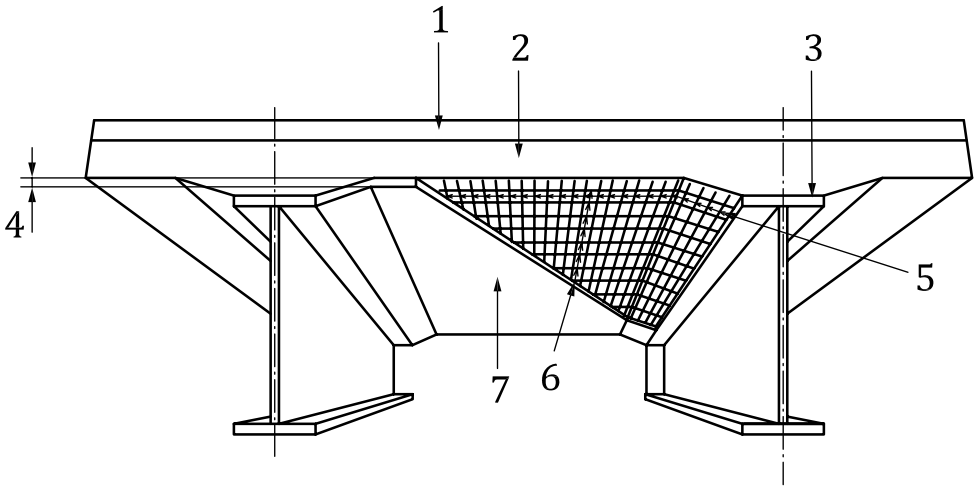

Key

1 pavement
2 RC deck
3 main girder
4 underlaying
5 distribution reinforcement
6 main reinforcement
7 bottom-surface (soffit) underlaying

Figure 1 — Example of application of bottom-surface (soffit) underlaying for deck strengthening

© ISO 2023 – All rights reserved

Documents
Document Sharing Hub
Full document details: BS ISO 5091-3:2023

5.2 Structural plan

The structural plan for a structure repaired or strengthened with bottom-surface (soffit) underlaying shall be as set forth in ISO 5091-1:2023, 5.2. The repaired or strengthened structure shall fulfil the required levels of durability, safety, serviceability and restorability throughout the design service life. Also, the intervention shall be planned taking into consideration the causes of degradation and damage of the existing members subject to bottom-surface (soffit) underlaying.

In flexural strengthening of existing members, the verification is mainly intended for serviceability, safety, etc. In fatigue strengthening of bridge decks, the punching shear capacity of the decks is required to be improved. In seismic strengthening of box culverts and tunnels, the verification is intended for restorability.

5.3 Structural details

The structure of bottom-surface (soffit) underlaying shall ensure the integrity between the existing and underlaying parts in the repaired or strengthened members to avoid brittle failure.

The structure of bottom-surface (soffit) underlaying shall ensure that reinforcing materials are securely anchored to the existing parts to reduce the risk of peeling.

The structure of bottom-surface (soffit) underlaying shall prevent retention of water in the interface between the existing and underlaying parts to avoid degradation of the interface or a decrease in adhesion.

The reinforcing materials used for bottom-surface (soffit) underlaying shall have a certain level of tensile stiffness that allows the reinforcing materials to behave with the existing parts as one. The reinforcing materials used for bottom-surface (soffit) underlaying shall not have excessive tensile stiffness against the existing parts.

If the tensile stiffness of the reinforcing materials is excessive, care shall be taken because the forces transferred through the interface between the existing and underlaying parts as well as the anchoring parts of the reinforcing materials become great, potentially leading to peeling or some other problem.

6 Materials

6.1 General

The materials used for bottom-surface (soffit) underlaying shall be of proven quality to ensure that the required performance is fulfilled for a necessary period.

6.2 Materials in existing structure

The characteristic values of material strength, partial safety factor for materials and design values of the materials in the existing structure that are used for the design shall be determined in accordance with ISO 5091-1:2023, 6.2.

6.3 Materials used in repairing or strengthening parts

6.3.1 General

The quality of the materials used in the parts repaired or strengthened with bottom-surface (soffit) underlaying shall be as set forth in ISO 5091-1:2023, 6.3.

6.3.2 Cementitious materials

The underlaying materials used for bottom-surface (soffit) underlaying shall have a bonding property and durability sufficient to integrate the existing parts with added reinforcing materials.

© ISO 2023 – All rights reserved
Documents
Document Sharing Hub
Full document details: BS ISO 5091-3:2023