BS ISO 529:2017

BSI Standards Publication

Short machine taps and hand taps

Documents
Document Sharing Hub

Full document details: BS ISO 529:2017

National foreword

This British Standard is the UK implementation of ISO 529:2017. It supersedes BS 949-1:1992 which is withdrawn.

The UK participation in its preparation was entrusted to Technical Committee MTE/18, Tools tips and inserts for cutting applications.

A list of organizations represented on this committee can be obtained on request to its secretary.

This publication does not purport to include all the necessary provisions of a contract. Users are responsible for its correct application.

© The British Standards Institution 2017.
Published by BSI Standards Limited 2017

ISBN 978 0 580 90910 8

ICS 25.100.50

Compliance with a British Standard cannot confer immunity from legal obligations.

This British Standard was published under the authority of the Standards Policy and Strategy Committee on 31 March 2017.

Amendments/corrigenda issued since publication

Date	Text affected

Documents
Document Sharing Hub

Full document details: BS ISO 529:2017

INTERNATIONAL STANDARD

ISO 529

Third edition
2017-03

Short machine taps and hand taps

Tarauds courts à machine et à main

Reference number
ISO 529:2017(E)

Documents
Document Sharing Hub

© ISO 2017

Full document details: BS ISO 529:2017

COPYRIGHT PROTECTED DOCUMENT

© ISO 2017, Published in Switzerland

All rights reserved. Unless otherwise specified, no part of this publication may be reproduced or utilized otherwise in any form or by any means, electronic or mechanical, including photocopying, or posting on the internet or an intranet, without prior written permission. Permission can be requested from either ISO at the address below or ISO's member body in the country of the requester.

ISO copyright office
Ch. de Blandonnet 8 • CP 401
CH-1214 Vernier, Geneva, Switzerland
Tel. +41 22 749 01 11
Fax +41 22 749 09 47
copyright@iso.org
www.iso.org

© ISO 2017 – All rights reserved

Documents
Document Sharing Hub

Full document details: BS ISO 529:2017

Contents

Page

Foreword ... **iv**

1 Scope ... **1**

2 Normative references ... **1**

3 Terms and definitions ... **1**

4 ISO metric threads ... **2**
4.1 Threads up to M25 ... 2
4.1.1 Full-diameter shank taps with plain connecting portion ... 2
4.1.2 Full-diameter shank taps with recess ... 3
4.1.3 Relieved-shank taps ... 4
4.2 Threads above M25 ... 5
4.2.1 Relieved-shank taps for coarse pitch metric thread ... 5
4.2.2 Relieved-shank taps for fine pitch metric thread ... 6

5 ISO inch threads, "Unified coarse" (UNC) and "Unified fine" (UNF) series ... **8**
5.1 "Unified" series threads up to 25,4 mm ... 8
5.1.1 Full-diameter shank taps with plain connecting portion ... 8
5.1.2 Full-diameter shank taps with recess ... 9
5.1.3 Relieved-shank taps ... 10
5.2 "Unified" series threads above 25,4 mm ... 11
5.2.1 Relieved-shank taps for "Unified coarse" series threads ... 11
5.2.2 Relieved-shank taps for "Unified fine" series threads ... 12

6 Non-recommended inch threads ... **13**
6.1 "British Standard Whitworth" (BSW) and "British Standard Fine" (BSF) threads ... 13
6.1.1 Full-diameter shank taps with recess ... 13
6.1.2 Relieved-shank taps ... 14
6.2 "British Association" (BA) threads ... 16
6.2.1 Full-diameter shank taps with plain connecting portion ... 16
6.2.2 Full-diameter shank taps with recess ... 17
6.2.3 Relieved-shank taps ... 18

Annex A (normative) **Shank diameter, overall length and thread length as a function of range of diameters and pitches** ... **19**

Annex B (informative) **Shank diameters and size of driving squares (Extract from ISO 237)** ... **22**

Annex C (informative) **Relationship between designations in this document and ISO 13399 series** ... **23**

Bibliography ... **26**

© ISO 2017 – All rights reserved

Documents
Document Sharing Hub
Full document details: BS ISO 529:2017

Foreword

ISO (the International Organization for Standardization) is a worldwide federation of national standards bodies (ISO member bodies). The work of preparing International Standards is normally carried out through ISO technical committees. Each member body interested in a subject for which a technical committee has been established has the right to be represented on that committee. International organizations, governmental and non-governmental, in liaison with ISO, also take part in the work. ISO collaborates closely with the International Electrotechnical Commission (IEC) on all matters of electrotechnical standardization.

The procedures used to develop this document and those intended for its further maintenance are described in the ISO/IEC Directives, Part 1. In particular the different approval criteria needed for the different types of ISO documents should be noted. This document was drafted in accordance with the editorial rules of the ISO/IEC Directives, Part 2 (see www.iso.org/directives).

Attention is drawn to the possibility that some of the elements of this document may be the subject of patent rights. ISO shall not be held responsible for identifying any or all such patent rights. Details of any patent rights identified during the development of the document will be in the Introduction and/or on the ISO list of patent declarations received (see www.iso.org/patents).

Any trade name used in this document is information given for the convenience of users and does not constitute an endorsement.

For an explanation on the voluntary nature of standards, the meaning of ISO specific terms and expressions related to conformity assessment, as well as information about ISO's adherence to the World Trade Organization (WTO) principles in the Technical Barriers to Trade (TBT) see the following URL: www.iso.org/iso/foreword.html.

This document was prepared by Technical Committee ISO/TC 29, *Small tools*, Subcommittee SC 9, *Tools with defined cutting edges, cutting items*.

This third edition cancels and replaces the second edition (ISO 529:1993), of which it constitutes a minor revision with the following changes:

— added Annex C giving the relationship between the symbols of this document and the symbols according to the ISO 13399 series.

© ISO 2017 – All rights reserved
Documents
Document Sharing Hub
Full document details: BS ISO 529:2017

Short machine taps and hand taps

1 Scope

This document specifies the general dimensions of short machine taps and hand taps. These dimensions, established as functions of the thread diameter and pitch, are the following:

— length of thread (maximum);

— overall length;

— shank diameter and dimensions of driving square;

— dimensions of the connecting portion between the shank and threaded part.

This document is applicable to taps intended for cutting the following threads:

a) ISO metric threads:

— coarse pitch;

— fine pitch;

b) ISO inch threads:

— "Unified Coarse" series (UNC) and "Unified Fine" series (UNF);

c) Inch threads, non-recommended:

— "British Standard Whitworth" (BSW) and "British Standard Fine" (BSF);

— "British Association" (BA).

NOTE 1 The overall length, thread length and diameters of shank for taps whose thread diameter and pitch are not listed in tables are given in Table A.1.

NOTE 2 Annex B gives an abstract from ISO 237 for shank diameters and size of driving squares, for information.

NOTE 3 Technical specifications for taps covered by this document (including marking) are given in ISO 8830.

2 Normative references

The following documents are referred to in the text in such a way that some or all of their content constitutes requirements of this document. For dated references, only the edition cited applies. For undated references, the latest edition of the referenced document (including any amendments) applies.

ISO 237, *Rotating tools with parallel shanks — Diameters of shanks and sizes of driving squares*

3 Terms and definitions

No terms and definitions are listed in this document.

ISO and IEC maintain terminological databases for use in standardization at the following addresses:

— IEC Electropedia: available at http://www.electropedia.org/

— ISO Online browsing platform: available at http://www.iso.org/obp

© ISO 2017 – All rights reserved

Documents
Document Sharing Hub

Full document details: BS ISO 529:2017

4 ISO metric threads

4.1 Threads up to M25

4.1.1 Full-diameter shank taps with plain connecting portion

Dimensions in millimetres

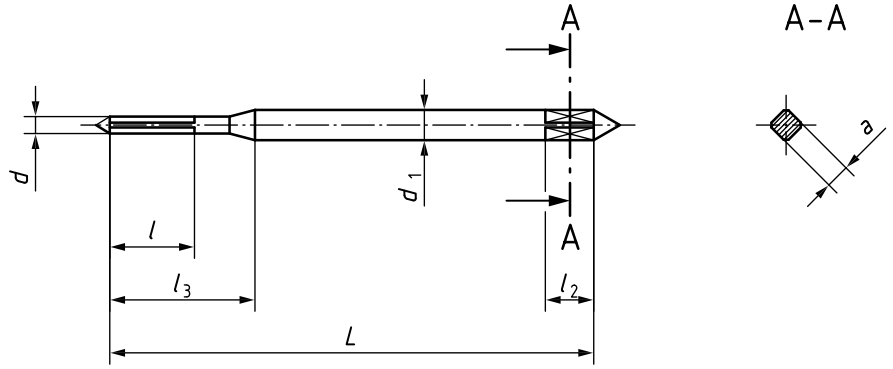

Designation			Pitch						Square	
Coarse pitch	Fine pitch	d nom.	Coarse	Fine	d_1 h9[b]	l[a] max.	L h16	l_3	a h11[c]	l_2 ±0,8
M1	M1 × 0,2	1	0,25	0,2	2,5	5,5	38,5	10	2	4
M1,1	M1,1 × 0,2	1,1								
M1,2	M1,2 × 0,2	1,2								
M1,4	M1,4 × 0,2	1,4	0,3			7	40	12		
M1,6	M1,6 × 0,2	1,6	0,35			8	41	13		
M1,8	M1,8 × 0,2	1,8								
M2	M2 × 0,25	2	0,4	0,25				13,5		
M2,2	M2,2 × 0,25	2,2	0,45		2,8	9,5	44,5	15,5	2,24	5
M2,5	M2,5 × 0,35	2,5		0,35						

[a] Manufacturers, if they wish, may increase the thread length to $l + \frac{l_3 - l}{2}$.

[b] In accordance with ISO 237, tolerance h9 applies to precision shanks. For non-precision shanks, the tolerance is h11.

[c] In accordance with ISO 237, the tolerance is enlarged to h12 when including errors of form of the square and of its position in relation to the shank.

© ISO 2017 – All rights reserved
Documents
Document Sharing Hub
Full document details: BS ISO 529:2017

4.1.2 Full-diameter shank taps with recess

Dimensions in millimetres

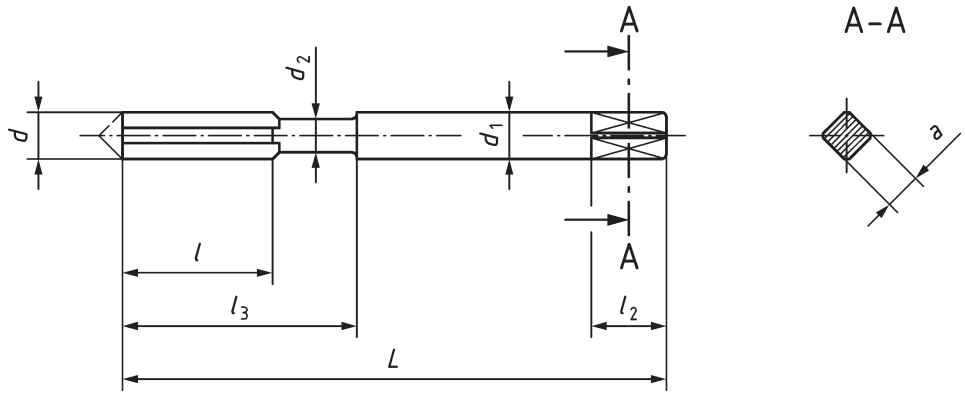

Designation			Pitch							Square	
Coarse pitch	Fine pitch	d nom.	Coarse	Fine	d_1 h9[b]	l[a] max.	L h16	d_2[a]	l_3	a h11[c]	l_2 ±0,8
M3	M3 × 0,35	3	0,5	0,35	3,15	11	48	2,12	18	2,5	5
M3,5	M3,5 × 0,3,5	3,5	0,6		3,55	13	50	2,5	20	2,8	
M4	M4 × 0,5	4	0,7	0,5	4		53	2,8	21	3,15	6
M4,5	M4,5 × 0,5	4,5	0,75		4,5			3,15		3,55	
M5	M5 × 0,5	5	0,8		5	16	58	3,55	25	4	7
—	M5,5 × 0,5	5,5	—		5,6	17	62	4	26	4,5	7
M6	M6 × 0,75	6	1	0,75	6,3	19	66	4,5	30	5	8
M7	M7 × 0,75	7			7,1			5,3		5,6	
M8	M8 × 1	8	1,25	1	8	22	72	6	35	6,3	9
M9	M9 × 1	9			9			7,1	36	7,1	10
M10	M10 × 1	10	1,5		10	24	80	7,5	39	8	11
	M10 × 1,25			1,25							

[a] The recess of full diameter shank taps with recess is optional at the manufacturer's discretion. If the recess is not required, such taps shall have a thread length equal to $l + \frac{l_3 - l}{2}$.

[b] In accordance with ISO 237, tolerance h9 applies to precision shanks. For non-precision shanks, the tolerance is h11.

[c] In accordance with ISO 237, the tolerance is enlarged to h12 when including errors of form of the square and of its position in relation to the shank.

© ISO 2017 – All rights reserved

Documents
Document Sharing Hub
Full document details: BS ISO 529:2017

4.1.3 Relieved-shank taps

Dimensions in millimetres

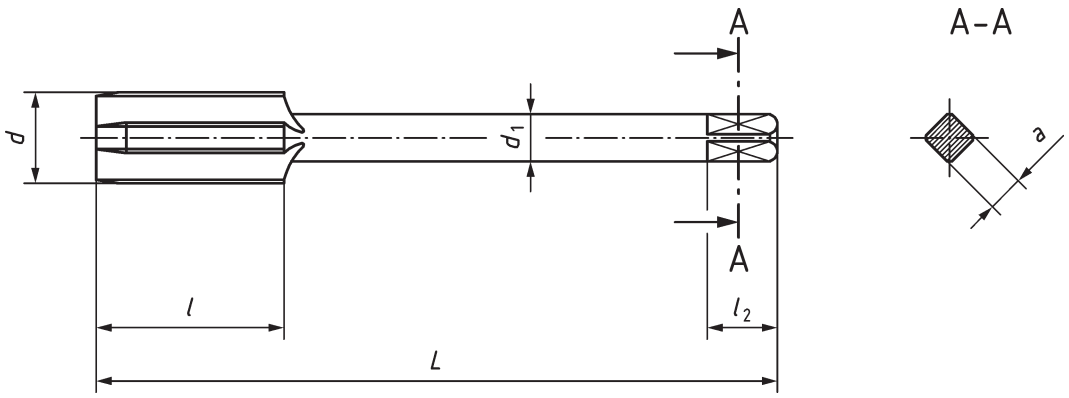

Designation			Pitch					Square	
Coarse pitch	Fine pitch	d nom.	Coarse	Fine	d_1 h9[a]	l max.	L h16	a h11[b]	l_2 ±0,8
M3	M3 × 0,35	3	0,5	0,35	2,24	11	48	1,8	4
M3,5	M3,5 × 0,3,5	3,5	0,6		2,5	13	50	2	
M4	M4 × 0,5	4	0,7	0,5	3,15		53	2,5	5
M4,5	M4,5 × 0,5	4,5	0,75		3,55			2,8	
M5	M5 × 0,5	5	0,8		4	16	58	3,15	6
—	M5,5 × 0,5	5,5	—			17	62		
M6	M6 × 0,75	6	1	0,75	4,5	19	66	3,55	
M7	M7 × 0,75	7			5,6			4,5	7
M8	M8 × 1	8	1,25	1	6,3	22	72	5	8
M9	M9 × 1	9			7,1			5,6	
M10	M10 × 1	10	1,5		8	24	80	6,3	9
	M10 × 1,25			1,25					
M11	—	11		—		25	85		
M12	M12 × 1,25	12	1,75	1,25	9	29	89	7,1	10
	M12 × 1,5			1,5					
M14	M14 × 1,25	14	2	1,25	11,2	30	95	9	12
	M14 × 1,5			1,5					
—	M15 × 1,5	15							
M16	M16 × 1,5	16			12,5	32	102	10	13
—	M17 × 1,5	17	—						
M18	M18 × 1,5	18	2,5		14	37	112	11,2	14
	M18 × 2			2					
M20	M20 × 1,5	20		1,5					
	M20 × 2			2					
M22	M22 × 1,5	22		1,5	16	38	118	12,5	16
	M22 × 2			2					

[a] In accordance with ISO 237, tolerance h9 applies to precision shanks. For non-precision shanks, the tolerance is h11.

[b] In accordance with ISO 237, the tolerance is enlarged to h12 when including errors of form of the square and of its position in relation to the shank.

© ISO 2017 – All rights reserved
Documents
Document Sharing Hub
Full document details: BS ISO 529:2017

Designation		d nom.	Pitch		d_1 h9[a]	l max.	L h16	Square	
Coarse pitch	Fine pitch		Coarse	Fine				a h11[b]	l_2 ±0,8
M24	M24 × 1,5	24	3	1,5	18	45	130	14	18
	M24 × 2			2					
—	M25 × 1,5	25	—	1,5					
	M25 × 2			2					

a In accordance with ISO 237, tolerance h9 applies to precision shanks. For non-precision shanks, the tolerance is h11.

b In accordance with ISO 237, the tolerance is enlarged to h12 when including errors of form of the square and of its position in relation to the shank.

4.2 Threads above M25

4.2.1 Relieved-shank taps for coarse pitch metric thread

Dimensions in millimetres

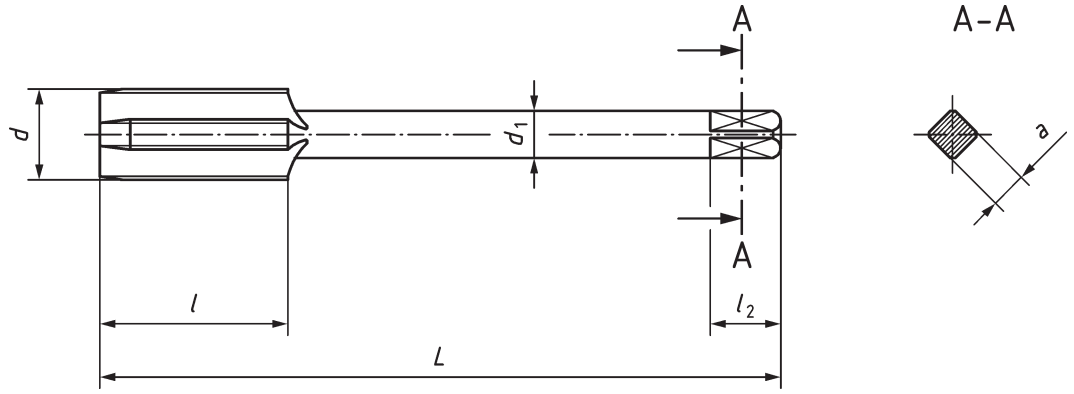

Designation	d nom.	Pitch	d_1 h9[a]	l max	L h16	Square	
						a h11[b]	l_2 ±1,6
M27	27	3	20	45	135	16	20
M30	30	3,5		48	138		
M33	33		22,4	51	151	18	22
M36	36	4	25	57	162	20	24
M39	39		28	60	170	22,4	26
M42	42	4,5					
M45	45		31,5	67	187	25	28
M48	48	5					
M52	52		35,5	70	200	28	31
M56	56	5,5					
M60	60		40	76	221	31,5	34
M64	64	6		79	224		
M68	68		45		234	35,5	38

a In accordance with ISO 237, tolerance h9 applies to precision shanks. For non-precision shanks, the tolerance is h11.

b In accordance with ISO 237, the tolerance is enlarged to h12 when including errors of form of the square and of its position to the shank.

© ISO 2017 – All rights reserved

Documents
Document Sharing Hub
Full document details: BS ISO 529:2017