BS ISO 5305:2024

BSI Standards Publication

Noise measurements for UAS (unmanned aircraft systems)

Documents
Document Sharing Hub

Full document details: BS ISO 5305:2024

National foreword

This British Standard is the UK implementation of ISO 5305:2024.

The UK participation in its preparation was entrusted to Technical Committee ACE/20/2, UAS - Product manufacturing and maintenance.

A list of organizations represented on this committee can be obtained on request to its committee manager.

Contractual and legal considerations

This publication has been prepared in good faith, however no representation, warranty, assurance or undertaking (express or implied) is or will be made, and no responsibility or liability is or will be accepted by BSI in relation to the adequacy, accuracy, completeness or reasonableness of this publication. All and any such responsibility and liability is expressly disclaimed to the full extent permitted by the law.

This publication is provided as is, and is to be used at the recipient's own risk.

The recipient is advised to consider seeking professional guidance with respect to its use of this publication.

This publication is not intended to constitute a contract. Users are responsible for its correct application.

© The British Standards Institution 2024
Published by BSI Standards Limited 2024

ISBN 978 0 539 15445 0

ICS 49.020

Compliance with a British Standard cannot confer immunity from legal obligations.

This British Standard was published under the authority of the Standards Policy and Strategy Committee on 31 January 2024.

Amendments/corrigenda issued since publication

Date	Text affected

Documents
Document Sharing Hub

Full document details: BS ISO 5305:2024

International Standard

ISO 5305

First edition
2024-01

Noise measurements for UAS (unmanned aircraft systems)

Mesures de bruit pour les UAS (aéronefs sans pilote)

Reference number
ISO 5305:2024(en)

© ISO 2024

Documents
Document Sharing Hub

Full document details: BS ISO 5305:2024

COPYRIGHT PROTECTED DOCUMENT

© ISO 2024

All rights reserved. Unless otherwise specified, or required in the context of its implementation, no part of this publication may be reproduced or utilized otherwise in any form or by any means, electronic or mechanical, including photocopying, or posting on the internet or an intranet, without prior written permission. Permission can be requested from either ISO at the address below or ISO's member body in the country of the requester.

ISO copyright office
CP 401 • Ch. de Blandonnet 8
CH-1214 Vernier, Geneva
Phone: +41 22 749 01 11
Email: copyright@iso.org
Website: www.iso.org

Published in Switzerland

Documents
Document Sharing Hub

Full document details: BS ISO 5305:2024

Contents

Page

Foreword ... **v**
Introduction ... **vi**
1 Scope ... **1**
2 Normative reference documents ... **1**
3 Terms and definitions ... **1**
4 Abbreviated terms ... **5**
5 Instrumentation ... **5**
5.1 General ... 5
5.2 Calibration ... 5
6 General requirements ... **5**
6.1 General ... 5
6.2 Requirements of acoustic far-field condition ... 6
6.3 Requirements of position of UAS to reduce aerodynamic flow effect ... 6
6.4 Requirements of position control ... 6
6.4.1 General ... 6
6.4.2 Requirement of position accuracy ... 6
6.4.3 Requirement of speed accuracy ... 7
6.5 Requirements of background noise ... 7
7 Anechoic chamber tests ... **7**
7.1 General ... 7
7.2 Requirements of anechoic chamber ... 8
7.2.1 Size ... 8
7.2.2 Anechoic chamber qualification ... 8
7.3 Measurement configurations ... 8
7.3.1 General ... 8
7.3.2 Hover and yaw: 4-microphone approach ... 10
7.3.3 Hover and yaw: multiple microphone approach ... 12
7.3.4 Take-off and landing ... 13
7.3.5 Cruise flight ... 15
8 Anechoic wind tunnel tests ... **16**
8.1 General ... 16
8.2 Requirements of anechoic wind tunnel ... 16
8.2.1 General ... 16
8.2.2 Wind tunnel test configurations ... 16
8.2.3 Refraction correction ... 17
8.2.4 Microphone clearance distance ... 17
8.2.5 Anechoic chamber size ... 17
8.3 Measurement configurations ... 17
8.3.1 General ... 17
8.3.2 Take-off and landing ... 18
8.3.3 Cruise flight ... 20
9 Outdoor tests ... **22**
9.1 General ... 22
9.2 Recommendations of the test site ... 23
9.3 Recommendations and requirements of the meteorological conditions ... 24
9.4 Microphone configuration and layout ... 24
9.4.1 Microphone configuration ... 24
9.4.2 Microphone layout ... 24
9.5 Measurement corrections and limitations ... 25
9.6 Measurement procedures ... 26
9.6.1 General ... 26

© ISO 2024 – All rights reserved

Documents
Document Sharing Hub

Full document details: BS ISO 5305:2024

9.6.2 Hover and yaw ... 26
9.6.3 Take-off and landing ... 26
9.6.4 Cruise flight ... 27

10 Uncertainties ... 27
10.1 General ... 27
10.2 Uncertainty sources and requirements ... 27
10.3 Evaluation of the uncertainty ... 28

11 Information to report ... 29
11.1 Test methods ... 29
11.2 Selected noise metrics ... 29
11.3 UAS under test ... 29
11.4 Test environment ... 29
11.5 Data acquisition system ... 29
11.6 Measurement ... 30
11.7 Results ... 30

Annex A (Informative) **Examples of the procedures to compute noise metrics from the recorded sound pressure signals ... 31**

Annex B (Informative) **Numerical examination of the acoustic far-field condition ... 34**

Annex C (Informative) **Measurement of far-field condition for a UAS propeller noise ... 38**

Annex D (Informative) **An example of adjusting the UAS location to realize different equivalent observer angles ... 40**

Annex E (Informative) **The effect of using windscreen for UAS propeller noise measurements ... 41**

Annex F (Informative) **Examples of ground-board mounted microphone configurations ... 43**

Annex G (Informative) **Uncertainty analysis example of a UAS noise measurement ... 45**

Bibliography ... 48

© ISO 2024 – All rights reserved

Documents
Document Sharing Hub
Full document details: BS ISO 5305:2024

Foreword

ISO (the International Organization for Standardization) is a worldwide federation of national standards bodies (ISO member bodies). The work of preparing International Standards is normally carried out through ISO technical committees. Each member body interested in a subject for which a technical committee has been established has the right to be represented on that committee. International organizations, governmental and non-governmental, in liaison with ISO, also take part in the work. ISO collaborates closely with the International Electrotechnical Commission (IEC) on all matters of electrotechnical standardization.

The procedures used to develop this document and those intended for its further maintenance are described in the ISO/IEC Directives, Part 1. In particular, the different approval criteria needed for the different types of ISO document should be noted. This document was drafted in accordance with the editorial rules of the ISO/IEC Directives, Part 2 (see www.iso.org/directives).

ISO draws attention to the possibility that the implementation of this document may involve the use of (a) patent(s). ISO takes no position concerning the evidence, validity or applicability of any claimed patent rights in respect thereof. As of the date of publication of this document, ISO had not received notice of (a) patent(s) which may be required to implement this document. However, implementers are cautioned that this may not represent the latest information, which may be obtained from the patent database available at www.iso.org/patents. ISO shall not be held responsible for identifying any or all such patent rights.

Any trade name used in this document is information given for the convenience of users and does not constitute an endorsement.

For an explanation of the voluntary nature of standards, the meaning of ISO specific terms and expressions related to conformity assessment, as well as information about ISO's adherence to the World Trade Organization (WTO) principles in the Technical Barriers to Trade (TBT), see www.iso.org/iso/foreword.html.

This document was prepared by Technical Committee ISO/TC 20, *Aircraft and space vehicles*, Subcommittee SC 16, *Unmanned aircraft systems*.

Any feedback or questions on this document should be directed to the user's national standards body. A complete listing of these bodies can be found at www.iso.org/members.html.

© ISO 2024 – All rights reserved

Documents
Document Sharing Hub

Full document details: BS ISO 5305:2024

Introduction

Within the last decade, multirotor unmanned aircraft systems (UAS) have greatly impacted the global market with unique and cost-effective vehicle systems for photography, industrial surveying, logistics, modern agricultural, civil engineering inspection, etc. A UAS can exert a significant impact on the living environments of the human and wildlife during its operation at low altitudes. The adverse environmental impacts include UAS noise. In urban applications, the UAS noise can be more annoying than road traffic or aircraft noise at similar noise levels[1].

The characteristics of UAS noise vary in different operating conditions. The modern agricultural UAS are designed to operate at a few meters above ground level. The logistic UAS are operated mainly in cruise conditions. The UAS for civil engineering inspection may operate in both hover and cruise conditions. The flight conditions of UAS are different from large civil transport aircraft and traditional rotorcraft[2]. Therefore, the noise characteristics are perceived differently, making the existing noise test codes used for large aircraft, helicopter, and tilt-rotor vehicles unsuitable. These test codes were developed for aircraft that typically operate far above civilians and urban regions, which are remotely related to the multirotor UAS. Currently, there is no internationally agreed procedures for measuring UAS noise in different working conditions.

The recently published European Commission Delegated Regulation EU 2019/945[3] for UAS details a noise test code following ISO 3744[4]. The EU 2019/945 considers UAS with maximum take-off mass (MTOM) up to 25 kg. The test code measures the sound power level of UAS in indoor and outdoor environments. The regulation was later amended by EU regulation 2020/1058 [5] as regards new UAS classes. However, the measurement is limited only to the UAS in hover. In addition, the microphone arrangement is not specified to avoid the influence of unsteady aerodynamic flow induced by the UAS on the acoustic measurement. Also, the directional nature of the noise produced by UAS was not considered. Recently, a guidance on the noise measurement of UAS lighter than 600 kg was published by EASA[6].

This document specifies the noise measurement methods for multirotor-powered UAS with an MTOM less than 150 kg. The noise due to the multirotor-powered UAS contains both tonal and broadband content, both of which may have a significant impact on humans. The tonal noise can cause annoyance because humans are sensitive to pitch characteristics[7], while the broadband noise can affect the human brainstem auditory evoked response[8]. Both the tonal and broadband noise produced by multirotor-powered UAS is dependent on the working conditions, leading to significant differences at different microphone locations.

This document aims at characterizing the UAS noise in different working conditions, but the efforts are left to the manufactures or client requirement to decide the needed measurements. It is not necessary to perform all measurements, and the measurer should select the measurement method according to the purpose. It provides procedures for performing noise measurements at the typical UAS flight-phases including hover, take-off, landing, and cruise. Configurations of the microphones are specified to ensure measurements are made at different locations to quantify the directivity of UAS noise. It also specifies the requirements of how measurements are conducted with the acoustic far-field conditions satisfied. This document focuses on the methods of measuring the sound pressure signals of the UAS under different working conditions, based on which post-processing of the recorded data can be conducted. For example, by computing the narrow-band noise spectra, the tonal noise components can be extracted. However, requirements for signal processing and evaluation of the measured data are not specified in this document. Instead, depending on the test condition, several common noise metrics are recommended, and the procedures to compute these metrics based on the recorded data are given in Annex A. This document can promote the understanding of the noise characteristics of UAS and provide reference methods for both manufacturers and regulatory bodies to assess the UAS noise.

© ISO 2024 – All rights reserved

Documents
Document Sharing Hub
Full document details: BS ISO 5305:2024

Noise measurements for UAS (unmanned aircraft systems)

1 Scope

This document specifies methods for recording the time history of instantaneous sound pressure in several positions around rotor powered unmanned aircraft systems (UAS) with a maximum take-off mass (MTOM) of less than 150 kg in accordance with ISO 21895[9]. The UAS can be either electrically powered or fuel-powered. It is not applicable to the tilt-rotor or tilt-wing UAS. It does not account for the UAS noise certification or regulation

This document can also be applied to measure the sound pressure from a UAS with either multiple rotors or a single rotor.

This document specifies:

a) recommendations and requirements for three different test facilities for the noise measurements of various categories of multirotor-powered UAS:

— requirements and recommendations of UAS noise tests in anechoic chambers (Clause 7);

— requirements and recommendations of UAS noise tests in anechoic wind tunnels (Clause 8);

— requirements and recommendations of UAS noise tests in outdoor environments (Clause 9);

b) requirements and recommendations for the configuration of noise measurement for multirotor-powered UAS in hover, vertical take-off and landing, and horizontal cruise;

c) recommendations for the test configuration and procedures to minimize the influence of meteorological effects.

2 Normative reference documents

The following documents are referred to in the text in such a way that some or all of their content constitutes requirements of this document. For dated references, only the edition cited applies. For undated references, the latest edition of the referenced document (including any amendments) applies.

ISO 26101-1, *Acoustics — Test methods for the qualification of the acoustic environment — Part 1: Qualification of free-field environments*

ISO/IEC Guide 98-3, *Uncertainty of measurement — Part 3: Guide to the expression of uncertainty in measurement (GUM:1995)*

IEC 60942, *Electroacoustics — Sound calibrators*

IEC 61094-4, *Electroacoustics — Measurement microphones – Part 4: Specifications for working standard microphones*

IEC 61260-1, *Electroacoustics — Octave-band and fractional-octave-band filters - Part 1: Specifications*

IEC 61672-1, *Electroacoustics — Sound level meters – Part 1: Specifications*

3 Terms and definitions

For the purposes of this document, the following terms and definitions apply.

© ISO 2024 – All rights reserved

Documents
Document Sharing Hub
Full document details: BS ISO 5305:2024

ISO and IEC maintain terminology databases for use in standardization at the following addresses:

— ISO Online browsing platform: available at https://www.iso.org/obp

— IEC Electropedia: available at https://www.electropedia.org/

3.1
anechoic chamber
test room in which a free sound field is obtained

[SOURCE: ISO 3745:2012[10], 3.7, modified — The admitted terms have been removed.]

3.2
anechoic wind tunnel
wind tunnel enclosed in an *anechoic chamber* (3.1) for indoor testing

Note 1 to entry: It has sufficiently low *background noise* (3.3) and the reflection of the sound from the test section is minimized.

3.3
background noise
noise from all sources other than the noise source under test

Note 1 to entry: Background noise also includes the airborne noise, structure-borne noise and electrical noise in the instrumentation.

3.4
sound pressure
p
difference between an instantaneous total pressure and the corresponding static pressure

Note 1 to entry: Sound pressure is expressed in pascals (Pa).

3.5
A-weighted sound pressure level
$L_{p,\mathrm{A}}$
ten times the logarithm to the base 10 of the ratio of the square of A-weighed frequency-band-limited sound pressure p to the square of the reference pressure of p_0=20 µPa

$$L_{p,\mathrm{A}} = 10 \log_{10} \left(\frac{p_{\mathrm{A}}^2}{p_0^2} \right)$$

Note 1 to entry: See the definition for "sound pressure level" in ISO/TR 25417[11].

Note 2 to entry: The frequency band shall be reported.

3.6
slow time-weighted A-weighted sound pressure level
$L_{p,\mathrm{A,S}}$
ten times the logarithm to the base 10 of the ratio of the running time average of the time weighted square of the A-weighted frequency-band-limited sound pressure to the square of the reference pressure of p_0=20 µPa

$$L_{p,\mathrm{A,S}}(t) = 10 \log_{10} \left(\frac{\left(\frac{1}{\tau_{\mathrm{s}}} \right) \int_{t_0}^{t} p_{\mathrm{A}}^2(\xi) e^{-\frac{t-\xi}{\tau_{\mathrm{s}}}} \mathrm{d}\xi}{p_0^2} \right)$$

where

© ISO 2024 – All rights reserved

Documents
Document Sharing Hub
Full document details: BS ISO 5305:2024

τ_s = 1 s is the exponential time constant for the slow time weighting;

t_0 is the starting time;

t is the time

[SOURCE: IEC 61672-1: 2013, 3.6, modified — Only applies to the slow time weighting.]

3.7
maximum slow time-weighted A-weighted sound pressure level
$L_{p,\mathrm{A,Smax}}$
greatest slow time-weighted A-weighted sound pressure level within a stated time interval

[SOURCE: IEC 61672-1: 2013, 3.7, modified — Only applies to the slow time weighting.]

3.8
A-weighted sound exposure
$E_{\mathrm{A},T}$
integral of the square of A-weighted frequency-band-limited sound pressure p_{A} over a stated time interval or event of duration T (starting at t_1 and ending at t_2)

$$E_{\mathrm{A},T} = \int_{t_1}^{t_2} p_{\mathrm{A}}^2(t)\,\mathrm{d}t$$

Note 1 to entry: The frequency band and frequency resolution shall be reported.

Note 2 to entry: See the definition for "sound exposure" in ISO/TR 25417[10].

3.9
A-weighted sound exposure level
$L_{E,\mathrm{A},T}$
ten times the logarithm to the base 10 of the ratio of the sound exposure, $E_{\mathrm{A},T}$, to a reference value $E_0 = 4\times10^{-10}\ \mathrm{Pa^2s}$

$$L_{E,\mathrm{A},T} = 10\log_{10}\left(\frac{E_{\mathrm{A},T}}{E_0}\right)$$

3.10
nominal height
target height of the *unmanned aircraft system (UAS)* (3.16) under test

3.11
hover
operation condition of an *unmanned aircraft system (UAS)* (3.16) that the vertical and horizontal positions and orientation are relatively unchanged

3.12
yaw
operation condition of an *unmanned aircraft system (UAS)* (3.16) that the vertical position is relatively unchanged, while the UAS is rotating with respect to the vertically oriented axis

3.13
take-off
operation condition of an *unmanned aircraft system (UAS)* (3.16) that the height is kept increasing

Note 1 to entry: In this document, it is restricted to vertical motion and the speed is constant except for the initial acceleration process.

© ISO 2024 – All rights reserved

Documents
Document Sharing Hub
Full document details: BS ISO 5305:2024

3.14
landing
operation condition of an *unmanned aircraft system (UAS)* (3.16) that the height is kept decreasing

Note 1 to entry: In this document, it is restricted to vertical motion and the speed is constant except for the final deacceleration process.

3.15
cruise
operation condition of an *unmanned aircraft system (UAS)* (3.16) that moves unidirectionally at a fixed height

Note 1 to entry: In this document, it means that the speed is constant.

3.16
UAS
unmanned aircraft system
aircraft and its associated elements which are operated remotely or autonomously

Note 1 to entry: In this document, it refers to the vehicles equipped with single or multiple rotors.

Note 2 to entry: This document is not valid to the tilt-rotor or tilt-wing UAS.

3.17
UAS diameter
D_A
unmanned aircraft system diameter
diameter of the smallest cylinder that encompasses the projection shape of the *unmanned aircraft system (UAS)* (3.16) on a plane

3.18
UAS centre
unmanned aircraft system centre
centre of the cylinder that encompasses the projection of the *unmanned aircraft system (UAS)* (3.16) shape on a plane

3.19
propeller diameter
D_R
diameter of each propeller employed for the multi-propeller powered *unmanned aircraft system (UAS)* (3.16)

Note 1 to entry: A schematic of D_A and D_R is shown in Figure 1.

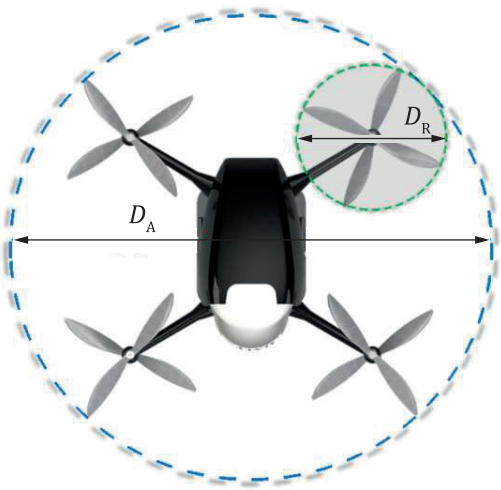

Figure 1 — A schematic of UAS diameter D_A and propeller diameter D_R

© ISO 2024 – All rights reserved

Documents
Document Sharing Hub
Full document details: BS ISO 5305:2024

4 Abbreviated terms

MTOM maximum take-off mass

PSD power spectral density

RPM revolution per minute

5 Instrumentation

5.1 General

The instruments shall record the time history of measured instantaneous sound pressure signals in the frequency range from 20 Hz to 20 kHz. The sound pressure data shall be stored as digital information in a non-compressed file format at a sampling frequency of at least 48 kHz.

For measurements in anechoic chambers and anechoic wind tunnels as described in this document, the microphones shall be either free-field microphone type WS2F or WS3F as defined in IEC 61094-4.

For outdoor measurements using ground boards as described in this document, the microphones shall be pressure microphones type WS2P or WS3P as defined in IEC 61094-4.

The instruments for measuring sound pressure signals, including microphone(s) as well as cable(s), windscreen(s), recording devices, and other accessories, if used, shall meet the relevant requirements for a class 1 instrument according to IEC 61672-1, as appropriate over the range of meteorological conditions specified in the method. Filters shall meet the requirements for a class 1 instrument according to IEC 61260-1.

5.2 Calibration

Before and after the measurements, a sound calibrator meeting the requirements of IEC 60942 class 1 shall be applied to each microphone to verify the calibration of the entire measuring system at one or more frequencies within the frequency range of interest. Without any adjustment, the difference between the readings made before and after each series of measurements shall be less than or equal to 0,5 dB. If this value is exceeded, the results of the series of measurements shall be discarded.

The calibration of the sound calibrator, the conformity of the instrumentation system with the requirements of IEC 61672-1 and the conformity of the filter set with the requirements of IEC 61260-1 shall be verified at intervals in a laboratory making calibrations traceable to appropriate standards.

The sound calibrator should be calibrated at intervals not exceeding 1 year; the conformity of the instrumentation system with the requirements of IEC 61672-1 should be verified at intervals not exceeding 1 year; and the conformity of the filter set with the requirements of IEC 61260-1 should be verified at intervals not exceeding 1 year.

6 General requirements

6.1 General

The characteristics of UAS noise shall be addressed in the measurements.

a) The condition of noise measurements shall satisfy the far-field condition.

b) The UAS noise is directional, and the sound pressure at different locations shall be measured.

c) The unsteady aerodynamic flow induced by the UAS rotors can affect the noise measurements if impinging to the microphones. Therefore, aerodynamic requirements on the measurement locations are specified in 6.3.

© ISO 2024 – All rights reserved

Documents
Document Sharing Hub
Full document details: BS ISO 5305:2024

The tests can be conducted in either an anechoic chamber, an anechoic wind tunnel or outdoors, depending on the MTOM, size and flight speed of the UAS. The measurement requirements in the anechoic chamber, anechoic wind tunnel and outdoor tests are specified in Clause 7, Clause 8 and Clause 9, respectively.

NOTE This document focuses on methods to record the sound pressure signals in both indoor and outdoor tests. Requirements and recommendations in different facilities are provided, but the selection of the facility is not compulsorily specified.

6.2 Requirements of acoustic far-field condition

The far-field condition is dependent on the properties of noise sources, including frequency, and the spatial distribution of the noise source (including its size). When the far-field condition is satisfied, the noise level decreases inversely with the microphone distance, and the UAS noise can be characterized by acoustic directivity. Therefore, there is a requirement for a minimum distance between the UAS and the microphones, which depends on the size of the UAS. For UAS noise measurements, to ensure the acoustic far-field condition, the microphone distance R shall be at least $5D_{\mathrm{A}}$, i.e.

$$R \geq 5D_{\mathrm{A}} \tag{1}$$

For sound at a high frequency, the significant interference pattern can affect the validity of the far-field condition proposed in Formula (1). However, the effect can be minimized when summing in a frequency band, for example, a 1/3-octave band, is performed. An illustration of the validity of the far-field condition using numerical experiments is given in Annex B. An experimental measurement of the acoustic far-field condition for a UAS propeller in an anechoic chamber following ISO 26101-1 is given in Annex C.

6.3 Requirements of position of UAS to reduce aerodynamic flow effect

To avoid an aerodynamic ground effect on the UAS propellers, the height of the UAS to the ground shall be at least the maximum of $H_{\mathrm{s}} = 1{,}2$ m and $2D_{\mathrm{A}}$, where D_{A} is the UAS diameter.

$$H_0 \geq \max(2D_{\mathrm{A}}, H_{\mathrm{s}}) \tag{2}$$

NOTE 1 The aerodynamic ground effect for propellers was described by Betz in the 1930s[12].

NOTE 2 The height of UAS refers to the height of UAS centre to ground.

6.4 Requirements of position control

6.4.1 General

The variation in the position of the UAS can lead to noise measurement uncertainties. The location of the UAS shall be recorded with the measurement error within 3 %. The orientation angle of the UAS shall be recorded with a measurement error within 3°.

NOTE 1 The requirements in this subclause only apply for UAS in flight conditions. For wind tunnel tests, the UAS is mounted at fixed locations.

NOTE 2 For flight conditions, this document only considers unidirectional motion at constant speed.

6.4.2 Requirement of position accuracy

For the UAS in hover and yaw, during the measurement period (at least 20 s), the deviation of the UAS position shall be within $\pm 5\,\%$ of the shortest distance between UAS and microphone. For example, if the shortest observer distance is taken as $R = 5D_{\mathrm{A}}$, the requirement for the deviation of UAS position shall be $|\Delta y| \leq 0{,}25D_{\mathrm{A}}$ during the measurement, where y is the coordinate of the UAS centre from the closest microphone position.

© ISO 2024 – All rights reserved

Documents
Document Sharing Hub
Full document details: BS ISO 5305:2024

For the UAS in the take-off and landing conditions for anechoic chamber tests, during the measurement period (at least 5 s), the position accuracy in the lateral direction shall be within $0{,}1L$, where L is the distance of the target UAS path to the lateral microphones (see Figure 5). For outdoor tests, the position accuracy in the horizontal direction shall be within $0{,}1\,H$, where H is the height of the centre of the UAS above the ground at the mid-point of the flight path.

For the UAS in the cruise condition in anechoic chamber tests, during the measurement period (at least 5 s), the position accuracy of the lateral location shall be within $0{,}1L$, where L is the lateral distance of the target UAS to the lateral microphones. The accuracy in the vertical direction shall be within $0{,}1H$, where H is the nominal height of the UAS.

For outdoor tests, the location of the centre of the UAS shall be determined to be within $0{,}1H$ in the vertical direction and within $0{,}1H$ to the target flight path in the lateral direction, where H is the nominal height of the centre of the UAS above the ground during the cruise.

6.4.3 Requirement of speed accuracy

For the tests of UAS in take-off, landing and cruise, the speed of the UAS shall have reached the target operation speed at the middle point of the flight path. The deviation of the UAS speed at the middle point of the flight path shall be within $\pm 5\,\%$ of the target operation speed.

6.5 Requirements of background noise

During the measurements, the A-weighted sound pressure level $L_{p,\mathrm{A}}$ of the UAS noise shall be sufficiently higher than that of the background noise. The frequency band used to compute $L_{p,\mathrm{A}}$ shall be reported. The procedures to compute the sound pressure level in different frequency bands are given in Annex A.

In tests in anechoic chambers and anechoic wind tunnels, $L_{p,\mathrm{A}}$ of the background noise at the microphone locations shall be at least 6 dB, preferably more than 15 dB, below the corresponding sound pressure level of the measured UAS noise.

If the 6-dB criterion is not satisfied, data may still be taken and reported, but the accuracy of the results can be reduced. In this case, the frequency ranges that do not satisfy the background noise requirement shall be clearly stated.

In outdoor tests, at the measurement positions, the background noise (including wind noise at the microphones) measured in each of the frequency bands of interest shall be at least 6 dB below the uncorrected level of the source measured in the presence of this background noise. In practice, suitable windscreens are needed to meet the signal to noise ratio requirement.

7 Anechoic chamber tests

7.1 General

Tests using an anechoic chamber can provide a controllable condition for noise measurements of UAS at different flight conditions.

However, the finite size of the anechoic chamber can limit the size and operation speeds of the UAS. This document specifies the requirements for the anechoic chamber and the details of noise measurement.

NOTE The anechoic chamber tests are often applicable to light and small UAS, for example, with the MTOM less than 4 kg.

For UAS with MTOM ranges from 4 kg to 25 kg, anechoic chamber tests are also suitable once the requirements for far-field conditions, aerodynamic flow effects and clearance distances are met. Otherwise, the tests should be conducted in either wind tunnels or the outdoor environment.

© ISO 2024 – All rights reserved

Documents
Document Sharing Hub
Full document details: BS ISO 5305:2024

Environmental conditions having an adverse effect on the microphones used for the measurements, for example, strong electric or magnetic fields, high or low temperatures, high humidity, shall be avoided. The instructions of the manufacturer of the measuring instrumentation regarding adverse environmental conditions shall be followed.

7.2 Requirements of anechoic chamber

7.2.1 Size

The anechoic chamber shall provide sufficient space for noise measurements of UAS. The distance can be influenced by the requirements on the distances between the UAS to microphones, UAS to walls, floor, and ceiling (or wedge tips if there are wedges) in the anechoic chamber, the UAS operation distance, and the microphone distance to the walls, floor, and ceiling (or wedge tips).

7.2.2 Anechoic chamber qualification

The validity of the inverse square law defined in ISO 26101-1 shall be ensured for all source positions and measurement directions specified in this document.

The maximum allowed deviation from the inverse square law in any of the measured directions for any of the microphone positions shall not exceed the values given in Table 1.

Table 1 — Maximum allowed deviation from the inverse square law for anechoic chamber qualification.

One-third-octave mid-band frequency (Hz)	Allowable deviation (dB)
125 to 630	± 1,5
800 to 5 000	± 1,0
≥6 300	± 1,5

For the source positions (UAS locations) defined in 7.3.2 and 7.3.3, the sound source used in ISO 26101-1 shall be positioned in the positions closest to the wall, floor and ceilings and shall be tested with microphone traverse directions along the measurement directions defined by the microphone positions.

All microphones shall be placed within the region in the anechoic chamber satisfying the qualification. This distance of the microphone to the walls, floor, and ceiling (or the wedge tips) is denoted as H_{m}.

7.3 Measurement configurations

7.3.1 General

This subclause specifies the requirements of microphone configurations and UAS operation in anechoic chamber tests. The microphones shall be placed on acoustically treated support to minimize reflections. When the location and attitude of the UAS, and the location of a microphone, are fixed, observer angles θ and φ can be determined, a schematic of which is shown in Figure 2.

© ISO 2024 – All rights reserved

Documents
Document Sharing Hub
Full document details: BS ISO 5305:2024

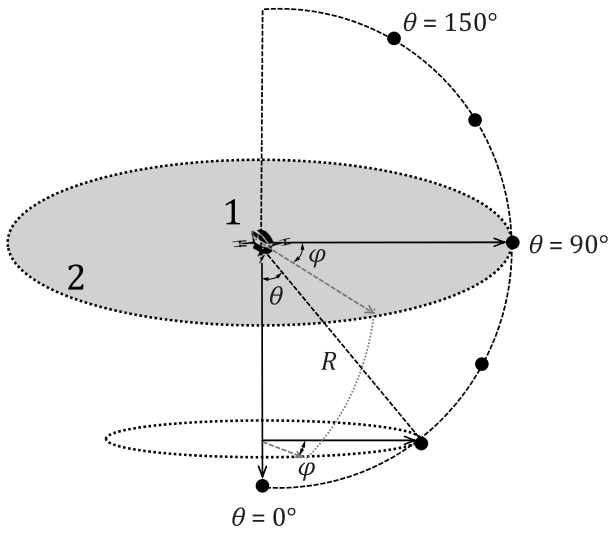

Key

1	UAS
2	plane of rotation
θ , φ	observer angles
R	distance of the UAS centre to the microphone

The UAS may be operated in either a hover, yaw, take-off, or landing condition.

Figure 2 — A schematic of the observer angles for UAS noise measurement

Various microphones are needed to measure the directivity of the UAS noise at different observer angles.

— For hover and yaw conditions, θ shall be measured at least from 0° to 150° with a resolution of 30° or smaller. The directions shall be maintained with an accuracy of $\pm 5^\circ$.

— For take-off and landing conditions, θ shall be measured at least from 0° to 90° relative to the middle position of the UAS flight path. The resolution shall be 45° or smaller. The directions shall be maintained with an accuracy of $\pm 5^\circ$.

— For cruise conditions, θ shall be measured at observer angles range from 0° to 135° relative to the middle position of the UAS flight path. The resolution shall be 45° or smaller. The directions shall be maintained with an accuracy of $\pm 5^\circ$.

For hover, take-off, landing and cruise conditions, the directivity of the UAS noise at different φ shall be measured by adjusting the UAS orientation with an angle resolution of 30° or smaller.

In yaw and hover states, the UAS may also be fixed on rigid support to allow for measurements to reduce the variations in UAS position. The support shall be acoustically treated to avoid reflections. In this case, the UAS flight system should be adapted such that the propeller rotation speeds are directly controlled to yield the target thrust.

Multiple microphones are needed to cover the target observer angles. 7.3.2 and 7.3.3 give recommendations of microphone arrangement and measurement procedures by using only 4 microphones and multiple microphones, respectively. During the test, the microphones are installed towards the UAS position.

This document focuses on measuring sound pressure signals, based on which the objective metric(s) can be computed. However, before the measurements, the objective metric(s) and the confidence interval of the metric(s) shall be given to determine the number of repeatability tests.

© ISO 2024 – All rights reserved

Documents
Document Sharing Hub
Full document details: BS ISO 5305:2024

For the noise measurements of UAS in hover and yaw conditions in anechoic chambers, the A-weighted sound pressure level $L_{p,\mathrm{A}}$ should be employed as the noise metrics with a 95 % confidence interval of ±1 dB. Here the confidence level refers to the random uncertainty during the repeatability tests.

For the noise measurements of UAS in take-off, landing, and cruise conditions in anechoic chambers, the A-weighted sound exposure level $L_{E,\mathrm{A},T}$ should be employed as the noise metrics with a 95 % confidence interval of ±1 dB. Here the confidence level refers to the random uncertainty during the repeatability tests.

7.3.2 Hover and yaw: 4-microphone approach

7.3.2.1 UAS position and microphone arrangement

The schematic to measure the UAS noise in hover and yaw is shown in Figure 3. With fixed microphone locations, different observer angle θ can be realized by adjusting the UAS position.

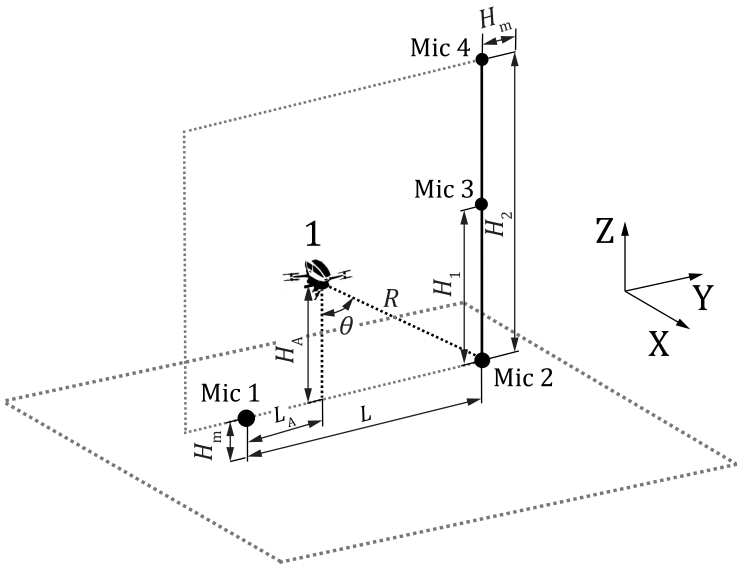

Key

1	UAS
L	horizontal distance of the lateral microphones
L_{A}	horizontal distance of the UAS to Mic 1
H_{A}	height of the UAS in hover and yaw conditions
H_1	height of the lateral microphone Mic 3
H_2	height of the lateral microphone Mic 4
H_{m}	microphone clearance distance to walls and ground
θ	observer angle
R	distance of the UAS centre to the microphone

NOTE The microphone locations can be fixed in the measurement, while the UAS location determined by H_{A} and L_{A} can be adjusted in the measurements.

Figure 3 — Schematic of the noise test configuration for UAS in hover and yaw conditions

The measurement uses 4 microphones Mic 1, Mic 2, Mic 3, and Mic 4. The distance (denoted as H_{m}) from the microphone positions to the wall, floor and ceiling shall be chosen so that each microphone position is within the part of the anechoic chamber where the inverse square law as specified in 7.2.2 is fulfilled. The

© ISO 2024 – All rights reserved

Documents
Document Sharing Hub
Full document details: BS ISO 5305:2024