BRITISH STANDARD

BS ISO 5389:2005

Turbocompressors — Performance test code

ICS 23.140

NO COPYING WITHOUT BSI PERMISSION EXCEPT AS PERMITTED BY COPYRIGHT LAW

Document Sharing Hub
British Standards

Full document details: BS ISO 5389:2005

National foreword

This British Standard reproduces verbatim ISO 5389:2005 and implements it as the UK national standard.

The UK participation in its preparation was entrusted to Technical Committee MCE/8, Compressors, pneumatic tools, pneumatic machines and vacuum technology, which has the responsibility to:

— aid enquirers to understand the text;

— present to the responsible international/European committee any enquiries on the interpretation, or proposals for change, and keep UK interests informed;

— monitor related international and European developments and promulgate them in the UK.

A list of organizations represented on this committee can be obtained on request to its secretary.

Cross-references

The British Standards which implement international publications referred to in this document may be found in the *BSI Catalogue* under the section entitled "International Standards Correspondence Index", or by using the "Search" facility of the *BSI Electronic Catalogue* or of British Standards Online.

This publication does not purport to include all the necessary provisions of a contract. Users are responsible for its correct application.

Compliance with a British Standard does not of itself confer immunity from legal obligations.

Summary of pages

This document comprises a front cover, an inside front cover, the ISO title page, pages ii to iv, pages 1 to 142, an inside back cover and a back cover.

The BSI copyright notice displayed in this document indicates when the document was last issued.

This British Standard was published under the authority of the Standards Policy and Strategy Committee on 31 January 2006

© BSI 31 January 2006

ISBN 0 580 47631 6

Amendments issued since publication

Amd. No.	Date	Comments

Documents
Document Sharing Hub

Full document details: BS ISO 5389:2005

INTERNATIONAL STANDARD

ISO 5389

Second edition
2005-12-15

Turbocompressors — Performance test code

Turbocompresseurs — Code d'essais des performances

Reference number
ISO 5389:2005(E)

Documents
Document Sharing Hub

Full document details: BS ISO 5389:2005

Documents
Document Sharing Hub

Full document details: BS ISO 5389:2005

Contents

Page

Foreword iv

1 Scope 1

2 Normative references 1

3 Symbols and definitions 1
3.1 Symbols and units 1
3.2 Definitions 5

4 Guarantees 6
4.1 General 6
4.2 Preconditions for the guarantee 7
4.3 Object of the guarantee 7
4.4 Supplementary guarantees 8
4.5 Guarantee comparison 8
4.6 Guarantees for series production 8

5 Measuring methods and measuring equipment 8
5.1 General 8
5.2 Pressures 9
5.3 Temperatures 10
5.4 Gas density 10
5.5 Gas composition 10
5.6 Gas velocity 11
5.7 Volume flow and mass flow 11
5.8 Speed of rotation 12
5.9 Power 12

6 Performance test 13
6.1 Preparation for the test 13
6.2 Execution of the test 13
6.3 Evaluation of test results 14
6.4 Measuring uncertainty of test results 15

7 Conversion of test results to guarantee conditions 24
7.1 General 24
7.2 Conversion 24

8 Guarantee comparison 36
8.1 Object 36
8.2 Execution 36
8.3 Special notes 45

9 Test report 46

Annex A (normative) Flow diagram and figures for volume flow ratio 47

Annex B (normative) Tests for volume flow ratio beyond flow similarity 50

Annex C (normative) Correction method for the influence of Reynolds Number on the performance of centrifugal compressors 55

Annex D (informative) Derivation of equations for calculating the uncertainty of measuring results 61

Annex E (informative) Special terms for compressors 63

Annex F (informative) Examples of acceptance test reports 96

Bibliography 142

Documents
Document Sharing Hub

Full document details: BS ISO 5389:2005

Foreword

ISO (the International Organization for Standardization) is a worldwide federation of national standards bodies (ISO member bodies). The work of preparing International Standards is normally carried out through ISO technical committees. Each member body interested in a subject for which a technical committee has been established has the right to be represented on that committee. International organizations, governmental and non-governmental, in liaison with ISO, also take part in the work. ISO collaborates closely with the International Electrotechnical Commission (IEC) on all matters of electrotechnical standardization.

International Standards are drafted in accordance with the rules given in the ISO/IEC Directives, Part 2.

The main task of technical committees is to prepare International Standards. Draft International Standards adopted by the technical committees are circulated to the member bodies for voting. Publication as an International Standard requires approval by at least 75 % of the member bodies casting a vote.

Attention is drawn to the possibility that some of the elements of this document may be the subject of patent rights. ISO shall not be held responsible for identifying any or all such patent rights.

ISO 5389 was prepared by Technical Committee ISO/TC 118, *Compressors and pneumatic tools, machines and equipment*, Subcommittee SC 1, *Process compressors*.

This second edition cancels and replaces the first edition (ISO 5389:1992), which has been technically revised. In particular, an improved flow Sheet for determination of setting conditions using similarity conditions has been integrated, taking into account the Reynolds number correction method.

Three classes of conversion of test results have been defined, including tests beyond flow similarity conditions.

The subclause on measuring uncertainties has been revised. The tried and proven procedure for determination of measuring uncertainties using the difference method has been added in order to be able to meet all test requirements, including in particular those occurring in the case of multicasing compressors and machine sets consisting of different driving machines and compressors.

The subclause on guarantee comparison has been enlarged, taking into account all possible cases of performance curves and guarantee points.

ISO 5389 was prepared, based on ASME PTC 10 [1] and VDI 2045-1 [2] and VDI 2045-2 [3].

Documents
Document Sharing Hub
Full document details: BS ISO 5389:2005

Turbocompressors — Performance test code

1 Scope

This International Standard applies to performance tests on turbocompressors of all types. It does not apply to fans and high-vacuum pumps, or to jet-type compressors with moving drive components

Turbocompressors comprise machines in which inlet, compression and discharge are continuous flow processes. The gas is conveyed and compressed in impellers and decelerated with further increase in pressure in fixed vaned or vaneless stators.

This International Standard is intended to provide standard provisions for the preparation, procedure, evaluation and assessment of performance tests on compressors as specified above. The acceptance test of the performance is based on this performance test code. Acceptance tests are intended to demonstrate fulfilment of the order conditions and guarantees specified in the contract.

2 Normative references

The following referenced documents are indispensable for the application of this document. For dated references, only the edition cited applies. For undated references, the latest edition of the referenced document (including any amendments) applies.

ISO 5167-1, *Measurement of fluid flow by means of pressure differential devices inserted in circular cross-section conduits running full — Part 1: General principles and requirements*

3 Symbols and definitions

3.1 Symbols and units

3.1.1 Latin letters

Symbol	Meaning	Unit
A	area	m^2
a	sonic velocity	m/s
B	manufacturing tolerance	%
b	outlet width of 1st impeller	m
c	velocity	m/s
c_p, c_v	specific heat capacity	kJ/(kg·K)
c_i	evaluation coefficients	—
D	outer impeller diameter of the first impeller	m
f	correction factor	—
f_x	mean relative deviation	

Documents
Document Sharing Hub

Full document details: BS ISO 5389:2005

Symbol	Meaning	Unit
G	quality grade	%
g	local acceleration due to gravity	m/s^2
h	specific enthalpy	kJ/kg
k	isentropic exponent	—
k_T	isentropic exponent, temperature	—
k_V	isentropic exponent, volume	
l	length of column	mm
Ma	Mach number	—
M_t	torque	Nm
M	molar mass	kg/mol
m	temperature exponent	—
$\dot{m}$	mass flow	kg/s
N	speed of rotation	1/s
n	polytropic exponent	—
P	power	kW
p	pressure	MPa (bar)
$\dot{Q}$	heat flow	kW
R	specific gas constant	J/(kg·K)
Ra	average roughness	µm
R_{mol}	universal gas constant	J/(kmol·K)
Re	Reynolds number	—
S	digital measuring step	—
s	specific entropy	kJ/(kg·K)
T	thermodynamic temperature	K
t	temperature	°C
u	tip speed, referred to D	m/s
u	specific internal energy	kJ/kg
V	confidence interval or measuring uncertainty	—
v	specific volume	m^3/kg
$\dot{V}$	volume flow	m^3/s
W	result function	—
w	mass fraction	—
X	compressibility function	—
X_N	ratio of reduced speeds of rotation	—
x	vapour content referred to moist mass of vapour of the same gas	kg/kg
$x_{(Subscript)}$	vapour content of vapour/gas mixtures referred to dry gas	kg/kg
Y	compressibility function	—
y	function value	—

Documents
Document Sharing Hub
Full document details: BS ISO 5389:2005

Symbol	Meaning	Unit
y	specific compression work	kJ/kg
Z	compressibility factor	—
z	number of stage groups	—

3.1.2 Greek letters

Symbol	Meaning	Unit
α	coefficient of heat transfer	W/(m^2·K)
β	coefficient of cubic expansion	1/K
γ	weighting factor	—
Δ	difference	—
ε	calculation coefficient	—
η	efficiency	—
η	dynamic viscosity	Ns/m^2
ϑ	ratio of ($RZ_1\ T_1$) values	—
κ	ratio of specific heat capacities	—
ν	polytropic ratio	—
ν	kinematic viscosity	m^2/s
Π	pressure ratio	—
ρ	density	kg/m^3
τ	relative uncertainty of measurement	—
ϕ	ratio of volume flow ratios	—
φ	flow coefficient	—
$\varphi_{(\text{Subscript})}$	relative humidity	—
ψ	reference process work coefficient	—
ω	angular speed	1/s

3.1.3 Subscripts

Index	Meaning
1	inlet (suction side)
2	outlet (discharge side)
I, II, III, ..., z	stages, numbered in direction of flow
∞	at an infinitely large Reynolds number
A	uncooled section of an intercooled compressor
air	dry air
amb	ambient (air, temperature)
an	assumption, driving machine
av	average
B	cooled section of a multi-stage intercooled compressor
cal	calibration

Documents
Document Sharing Hub

Full document details: BS ISO 5389:2005

Index	Meaning
co	converted to guarantee conditions
cog	converted to the pressure ratio and inlet volume flow of the guarantee point
comb	combined sections
cond	condensate
cou	coupling
crit	critical
d	dynamic
dev	deviation
dr	driving machine
dry	dry
eff	effective
Ex	extreme value of ϕ
g	guarantee or reference conditions
gas	gas
i	ith term of a sum (i = 1, 2, 3, ...)
i	internal
in	input
j	number of stage group (j = I, II, III, ..., z)
k	isentropic exponent
L	leakage
lub	lubricant
M	measurement, motor
$\dot{m}$	mass flow
mech	mechanical
n	standard state
N	frequency of rotation
out	output
p	polytropic
P	power
Pr	reference or standard process
pr	precalculated or predicted test results
rad	radiation and convection
ran	relevant measuring range of instrument
Re	referred to Reynolds number
red	reduced speed
ref	reference value
res	result
s	isentropic
sat	saturated steam/vapour

Documents
Document Sharing Hub
Full document details: BS ISO 5389:2005

Index	Meaning
seal	sealing liquid
side	sidestream or extractions
st	static
sup	supply
sur	surface
sys	system
T	isothermal
t	temperature
te	test result
term	terminals
tol	permissible deviation
tot	total
u	tip or peripheral
us	usable
V	volume
vap	vapour, steam
wet	moist
wf	working fluid
W	cooling water or coolant
x	between inlet and outlet
y	function value

Where no specific remark is made to the contrary, the thermodynamic variables of state used without indices in this International Standard describe total state.

3.2 Definitions

For the purposes of this document, the following terms and definitions apply. Additional terms and definitions are given in Annex E.

3.2.1
ratio of volume flow ratios

$$\phi = \frac{\left(\dot{V}_1 / \dot{V}_2\right)_{\text{te}}}{\left(\dot{V}_1 / \dot{V}_2\right)_{\text{g}}} \tag{1}$$

3.2.2
ratio of reduced speeds of rotation

$$X_N = \frac{\left(\dfrac{N}{\sqrt{R \cdot Z_1 \cdot T_1}}\right)_{\text{te}}}{\left(\dfrac{N}{\sqrt{R \cdot Z_1 \cdot T_1}}\right)_{\text{g}}} \tag{2}$$

Documents
Document Sharing Hub
Full document details: BS ISO 5389:2005

3.2.3
tip Mach number

$$Ma_{\mathrm{u}} = \frac{u}{a_1} \tag{3}$$

3.2.4
tip Reynolds number

$$Re_{\mathrm{u}} = \frac{ub}{\upsilon_1} \tag{4}$$

3.2.5
volume flow coefficient

$$\varphi = \frac{\dot{V}_1}{\frac{\pi}{4} \cdot D^2 \cdot u} \tag{5}$$

3.2.6
reference process work coefficient

$$\psi_{\mathrm{Pr}} = \frac{y_{\mathrm{Pr}}}{u^2/2} \tag{6}$$

3.2.7
enthalpy coefficient

$$\psi_{\mathrm{i}} = \frac{\Delta h}{u^2/2} \tag{7}$$

3.2.8
RZ_1T_1 **ratio**

$$\vartheta_j = \frac{(R \cdot Z_1 \cdot T_1)_j}{(R \cdot Z_1 \cdot T_1)_{\mathrm{I}}} \qquad \vartheta_{j,\mathrm{B}} = \frac{(R \cdot Z_1 \cdot T_1)_j}{(R \cdot Z_1 \cdot T_1)_{\mathrm{I,B}}} \tag{8}$$

where I,B is the first stage of cooled section B

3.2.9
section
one to several successive stages of a turbocompressor without intercooling through which the same mass flow flows

4 Guarantees

4.1 General

The customer and the manufacturer shall make a contractual agreement specifying which properties and characteristics of the compressor are to be guaranteed and demonstrated by the acceptance test. Verification of these properties is effected by means of the values measured in the acceptance test and converted to the guarantee conditions.

Fulfilment of the guarantee may be demanded only if all components of the compressor system are in correct condition at the acceptance test (see 6.1.3).

Documents
Document Sharing Hub
Full document details: BS ISO 5389:2005

4.2 Preconditions for the guarantee

The conditions that apply as a precondition for the guarantee, modification of which will affect the functioning of the compressor, shall be specified in the contract of supply. These conditions can include the following:

a) inlet pressure (or discharge pressure in the case of suction-type compressors) and inlet temperature;

b) in the case of inward sidestreams, their thermodynamic states and the ratio of the side mass flows to the inlet mass flow, in the case of intermediate extraction the ratio of the extracted mass flows to the inlet mass flow and the extraction pressure;

c) in the case of intercooled compressors, the recooling temperatures and pressure drops between the relevant compressor sections;

d) physical properties of the gas or vapour and its composition in volume or mass fractions;

e) coolant, its mass flow and inlet temperature;

f) operating conditions of the driving machine (e.g. enthalpy differences, inlet and outlet state, heat value of the fuel, type, voltage and frequency of electrical current, speed);

g) inlet and outlet state referred to the inlet and outlet flow area of the compressor;

h) speed (necessary deviations to meet the guarantee points shall be agreed upon between customer and manufacturer).

4.3 Object of the guarantee

The following values can be guaranteed under the preconditions specified in 4.2:

a) actual inlet volume flow as defined in E.4.2;

b) discharge pressure (or inlet pressure in the case of suction-type compressors) and intermediate pressures in the case of inward sidestreams and intermediate extraction;

c) the power for specified inlet volume flows and discharge pressures (or inlet pressures in the case of vacuum-type compressors) in the form of

   — compressor power at the compressor coupling, or

   — power of the compressor with gearbox at the coupling of the driving machine, or

   — electrical power at the terminals of the drive motor, or

   — driving machine fuel consumption.

   Where the compressor and driving machine have common components (e.g., bearings, oil pumps, etc.), an agreement shall be made specifying the manner in which the losses occurring inside the components are to be apportioned (see 5.9).

   The related power or the efficiency related to a suitable reference process (see E.5) may also be guaranteed instead of power.

d) the power of auxiliary machinery (e.g. oil pumps or cooling-water pumps) where such is not included in the guaranteed power;

Documents
Document Sharing Hub

Full document details: BS ISO 5389:2005

e) operating range limits, as follows:

— maximum actual inlet volume flow at a specified discharge pressure or maximum pressure at a specified actual inlet volume flow,

— minimum actual inlet volume flow at a specified discharge pressure,

— surge limit.

See E.9.

4.4 Supplementary guarantees

Additional guarantees (for part-load efficiencies, sealants, temperature of the gas compressed, cooling efficiency of coolers and condensers) can be required in cases were they are of significance for operation, or for any other reasons.

4.5 Guarantee comparison

In case of an acceptance test, the test results measured and converted to the guarantee conditions shall be assessed against the values guaranteed (see Clause 8), making allowance for the limits of measuring uncertainties (see 6.4).

Any manufacturing tolerances for the guarantee shall be deemed to constitute a component of the contract of supply and not of this International Standard.

4.6 Guarantees for series production

Where a series of compressors of the same design are manufactured within a short period of time, it is not customary to perform an acceptance test on each individual compressor. Such a test performed on a few compressors selected at random from the series and completed successfully, constituting a type-test, shall be deemed to suffice. The details of this procedure shall be governed by the contract of supply.

5 Measuring methods and measuring equipment

5.1 General

5.1.1 Measuring methods and measuring uncertainties

Following measuring methods and measuring instruments inclusive of the rules necessary for their use shall be used if applicable.

Other measuring methods may be used upon agreement regarding testing and fitting.

5.1.2 Facilities for measurement

The measuring points and equipment for measurement of pressure, temperature, flow, power and speed shall be incorporated into the compressor during design and during its installation into the subsequent system. Above all, it shall be ensured at all points for measurement of flow as specified in ISO 5167-1 that adequate lengths of straight pipe are available and suitable flanged joints for installation of the orifices and nozzles. Figures E.3 and E.4 illustrate a suitable arrangement for two measuring points each for pressure and temperature on the compressor. Guarantees should be referred to the measuring points provided and prepared. Sockets for reference instruments should be provided at the main measuring points.

Documents
Document Sharing Hub
Full document details: BS ISO 5389:2005

5.1.3 Measuring instruments

The following measuring instruments shall be used for acceptance tests:

a) measuring instruments which have been calibrated by comparison with measuring instruments as specified in 5.1.3 c),

b) measuring instruments for which a calibration or test certificate issued by an accredited authority is submitted,

c) other tried and proven measuring instruments of a known accuracy, the use of which has been agreed between the parties to the contract.

All measuring instruments (and orifices and nozzles in particular) shall be checked immediately before installation and/or before and after the test for condition and dimensional accuracy. It shall, in addition, be ensured that the installation point, installation itself, and the measuring instrument itself comply with the relevant specifications. The result of this check shall be recorded.

5.1.4 Use of transducers; data acquisition

When electronic measuring instruments are used with transducers of any type and digital evaluation is possible, the transducers shall be calibrated and a record kept of calibration. It shall be possible to check the measuring systems by suitable means. This provision applies analogously to the use of data acquisition systems and electronic data processing.

5.2 Pressures

5.2.1 Static pressure

The static pressure present at a wall should be measured by means of holes drilled in the wall. Such holes shall have neither a burr on the wall surface, nor a flared opening. The diameter of the holes shall be kept as small as possible; the lower limit is that adequate to avoid the danger of blockage.

In long straight pipes, flow parallel to the pipe axis is established. The static pressure may then be assumed to be constant in every flat flow cross-section perpendicular to the axis of the pipe; sampling of pressure by means of a hole drilled in the pipe wall then suffices for the purpose of measurement (see Figures E.3 and E.4 for the pressure-sampling apparatus).

5.2.2 Dynamic pressure and total pressure

Where an average velocity, c, is known from flow measurement and flow area, an average dynamic pressure, p_d, can be calculated from this and with the static pressure, p, an average total pressure, p_{tot}, can be calculated as follows:

For the average velocity:

$$c = -\frac{c_p \cdot p \cdot A}{\dot{m} \cdot R \cdot Z} + \sqrt{\left(\frac{c_p \cdot p \cdot A}{\dot{m} \cdot R \cdot Z}\right)^2 + 2 \cdot c_p \cdot T_{tot}} \tag{9}$$

For the ratio of total to static pressure:

$$\frac{p_{tot}}{p} = \frac{p + p_d}{p} = \left(\frac{T_{tot}}{T}\right)^{\frac{k}{k-1}} \tag{10}$$

Documents
Document Sharing Hub
Full document details: BS ISO 5389:2005

This approximation for the calculation of the dynamic and total pressure with the average velocity, c, is regarded as sufficiently accurate in the scope of the present rules.

5.2.3 Installation of measuring lines

Measuring lines installed between the sampling point and the display instrument shall be installed with great care. Any leaks shall be eliminated. Provisions shall be made to prevent blockage by foreign bodies. Where condensate occurs in the measuring lines, such lines shall be completely filled with condensate or shall be reliably kept free of condensate (e.g. by arranging the measuring instrument at a geodetic higher level than the measuring point).

5.3 Temperatures

The static temperature, T, and total temperature, T_{tot}, cannot be directly measured as variables of state of a gas in flow.

Ratio of total to static temperature:

$$\frac{T_{tot}}{T} = \frac{1}{1 - \frac{c^2}{2 \cdot c_p \cdot T_{tot}}} \tag{11}$$

Temperature sensors of conventional type and size (liquid thermometers, thermocouples, resistance thermometers with or without thermowells for installation) gravitate, even when correctly installed, to their so-called characteristic temperature, which is located between T and T_{tot}, as soon as they are exposed to the flowing gas. There are, however, temperature probes (“total temperature measurement instruments”) such as plate-type, hook, and diffusor thermometers, the indication of which approximates extremely closely to the total temperature (temperature at rest) of the gas.

Where it can be shown that the velocity recovery effect is insignificant, it may be neglected. In no case should it be neglected if the dynamic head exceeds 0,5 % of the specific compression work. The velocity recovery factor to be used should be agreed on. In the absence of any more specific values, the following may be used:

a) thermometers and thermocouples in wells: 0,65;

b) bare thermocouples: 0,80;

c) bare thermocouples with insulation shields: 0,97.

5.4 Gas density

For gases and vapours of known composition, density can be determined from equations of state, state charts, or tables. In the case of gas mixtures of unknown composition, density should be measured directly using an acknowledged method.

5.5 Gas composition

5.5.1 General

Where mixtures of gases or gas/vapour mixtures are being compressed, the composition of the mixture shall, if necessary, be checked at regular intervals using an acknowledged method. The frequency, nature and accuracy of such checks will vary according to fluctuations in gas composition.

Documents
Document Sharing Hub
Full document details: BS ISO 5389:2005

5.5.2 Moisture content

5.5.2.1 Air humidity

The relative humidity, expressed in percent, of air at atmospheric pressure (p_{amb}) can be calculated as follows using the temperatures read on the wet (t_{wet}) and dry (t_{dry}) thermometer of a psychrometer (as defined, for instance, by *Assmann*) using Sprung's approximation equation:

$$\varphi_{vap} = \frac{p_{sat} - 0{,}5 \cdot \left(t_{dry} - t_{wet}\right) \cdot \frac{p_{amb}}{755}}{p_{dry}} \cdot 100 \qquad (12)$$

where

p_{sat} is the saturated vapour pressure at t_{wet};

p_{dry} is the saturated vapour pressure at t_{dry};

p_{amb} is the ambient pressure reading.

Relative humidity (φ_{vap}) can be read from an h_{air} - x_{air} chart for any pressure, p, of the air at known values for t_{wet} and t_{dry} and the barometer level p_{amb}.

The relative humidity of compressed air can be determined by diverting a side stream from the centre of the pressure line and depressurizing it to atmospheric pressure. The relative humidity, φ_{vap}, measured at atmospheric pressure, shall then be converted to the state in the line.

Recognized methods other than the psychrometric measuring method are also permissible (e.g. the dewpoint, freezing-out, lithium chloride and absorption methods).

5.5.2.2 Moisture in other gases

The other methods mentioned in 5.5.2.1 are recommended for use with gases other than air [instead of Equation (12)].

5.6 Gas velocity

5.6.1 Quantitative measurement

The numerical value for local velocity can be measured using indicating anemometers or probes (e.g. Prandtl or pitot tube), which are non-direction-dependent within certain limits (see 5.7.3).

5.6.2 Determination of direction

The direction of velocity can be determined using fixed calibrated probes, or by means of the pressure differences measured at adjustable probes.

Determination of direction is not necessary in long straight piping sections.

5.7 Volume flow and mass flow

5.7.1 Flow measurement using orifices and nozzles

ISO 5167-1 is definitive for measurement of flow using orifices and nozzles. Measurement may be effected using non-standardized orifices and nozzles if special agreements to this effect have been made (see e.g. References [4] and [5]).

AVA Documents
Document Sharing Hub

Full document details: BS ISO 5389:2005

5.7.2 Measurement using gas meters

Volume flow measurements can be effected using calibrated gas meters.

It shall be ensured that the gas flows through the meter without disruption by pulsating surges. The meter shall also be checked for leaks at the drums or bellows and for precise filling with sealant liquid and for changes in the gas-saturation level of the sealing liquid.

5.7.3 Other measuring methods

If one of the measuring methods mentioned in 7.5.1 and 7.5.2 is not be practicable for technical or economical reasons, other measuring methods may be used upon agreement between the customer and the manufacturer.

In a constant flow, the volume or mass flow can be determined from a calibrated pressure difference or by means of measurement of the velocity profile (e.g. Reference [6]). The mass flow can also be calculated from suitable energy balances, with the inclusion of drive power or of the process.

5.8 Speed of rotation

Where measurement of the speed of rotation is necessary for the performance test, it shall be determined with the accuracy necessary for this purpose using a cyclometer, tachometer, frequency meter, etc.

5.9 Power

Where the power input to the compressor is guaranteed, this shall be measured

a) by performing an energy balance on the driver in accordance with the appropriate test codes for the particular type of machine;

b) by measuring the torque using a cradled (swinging field) type of motor or a precision torque-meter;

c) by establishing a total energy balance for the compressor, by measuring all the losses and adding them to the energy input to the compressed gas.

In case 5.9 a), where the performance is guaranteed in terms of the energy input to the driver, this shall be measured in accordance with the appropriate International Standards or national standards.

In the case 5.9 b) of measuring the torque, torque-meters shall not be used for measurement below one-third of their rated torque. They shall be calibrated with the measuring element at the same temperature as used during the test. The calibration shall be carried out twice, once with continuously increasing load and once with continuously decreasing load, and the mean of the two sets of readings shall be used. With both torque-meters and cradled electric motors, it shall be shown that the hysteresis effect, i.e. the difference between the readings with increasing and decreasing load due to mechanical friction etc., does not exceed 0,5 % of the measured torque.

In the case 5.9 c) of establishing a total energy balance of the compressor-heat exchange with the ambient air by means of conduction and radiation shall be taken into account:

$$\dot{Q}_{\text{rad}} = \alpha \cdot A_{\text{rad}} \cdot \left(t_{\text{sur}} - t_{\text{amb}}\right) \tag{13}$$

A coefficient of heat transfer α = 14 [W/(m^2·K)] can be used for estimation of these losses. A_{rad} is the external surface of the compressor between inlet and discharge. t_{sur} is a mean surface temperature of the compressor, either measured or estimated from the gas temperatures in the compressor. If the radiation heat loss, $\dot{Q}_{\text{rad}}$, is already known when evaluating the test values, test power can already be corrected by adding $\dot{Q}_{\text{rad,te}}$ to the gas power, $P_{\text{i,}\Delta\text{t,te}}$, evaluated from mass flow and temperature rise.

Documents
Document Sharing Hub
Full document details: BS ISO 5389:2005

$$P_{i,te} = P_{i,\Delta t,te} + \dot{Q}_{rad,te} \quad (14)$$

Otherwise, e.g. in case of an online test evaluation, $\dot{Q}_{rad}$ is converted separately (see 7.2.4.5).

6 Performance test

6.1 Preparation for the test

6.1.1 General

It shall be ensured when preparing for the performance test that measuring instruments, the measuring inaccuracies of which ensure the necessary level of accuracy (see 6.4.2), are selected.

6.1.2 Test procedure

The type, scope and chronological sequence of measurements, the location of the measuring points and the measuring methods to be used, should all be specified in a test schedule. The diagrams and drawings required for comprehension should be attached to the test procedure.

In the case of performance tests, this procedure should be agreed between the supplier and the purchaser on the basis of the guarantee conditions.

The operating points at test shall be selected in accordance with 7.2. Bypass lines from the pressure to the suction side of the compressor and from the hot-water to the cold-water side of the coolers, including the flow-restriction elements, etc., can be installed, if necessary, as an aid to adaptation of test conditions to guarantee conditions.

6.1.3 Inspections and preliminary test

It shall be ensured before (and after) the performance test that all lines are free of obstructions and all parts of the system are in correct condition. It shall also be ensured that all supply and return lines not in use during the test are correctly closed, by installing blind discs if necessary. All relevant pipes shall be checked for tightness. Any components in the system exposed to fouling, and surface heat-exchange coolers in particular, shall be cleaned on the water and gas sides before the test is started. If this is not possible, corresponding agreements shall be made on the implications.

All measuring instruments and measuring lines shall be carefully checked for correct adjustment and correct connection (see 5.1).

Also in the case of performance tests to be performed at the installation location, the supplier may first perform his own preliminary test. Such preliminary tests can also be used to familiarize the test staff and to test and check the instruments and equipment used. If this test is successful, it can be accepted as a performance test by the customer.

6.2 Execution of the test

6.2.1 General

Performance tests should, wherever possible, take place under the operating conditions specified. It is recommendable to isolate the compressor system from operational fluctuations.

Where the performance test is performed in the system, the adjustment of operating parameters may be performed only in consultation with the person responsible for the system.

AVA Documents
Document Sharing Hub

Full document details: BS ISO 5389:2005

During a performance test on a compressor or a compressor system, no modification that would influence the compressor performance and that could not be retained under normal operating conditions may be implemented.

The performance test shall be carried out with all values in steady-state condition.

The data measured, the time of measurement and unusual occurrences shall be documented during the test.

The most important measured values shall (wherever possible) all be registered simultaneously. After the test, the supplier's and purchaser's representatives and any neutral parties attending shall all be supplied with a copy of the documentation.

The type, number and duration of measurements and their frequency will vary according to the importance of the particular measurements, taking into account the special characteristics of the measuring equipment and of operation. An agreement shall be made on this item.

In the case of cooled compressors, it is also advisable to ascertain in a test the effectiveness of the intercooler under design conditions.

6.2.2 Permissible mean value deviations from the values specified in the guarantee conditions and permissible fluctuations of individual values around the mean values

If the operating conditions deviate from the guarantee conditions, the test shall be valid, provided the mean value deviations from the values in the guarantee preconditions are within certain limits. The limits can be found in Tables 1 and 2 (7.2), in Figure 2 and Annex A.

Still greater deviations can be allowed, provided corresponding agreements have been made between the supplier and the purchaser.

Where individual values fluctuate substantially, it is necessary to make an agreement regarding the permissibility and possible enlargement of the measurement uncertainty range, depending on the particular circumstances (see e.g. Reference [7]).

6.3 Evaluation of test results

6.3.1 Averaging

Readings from the values that influence the calculation linearly, taken at equal time intervals, can be averaged arithmetically.

Readings from values that do not influence the calculation linearly, taken at equal time intervals, shall be averaged in the equivalent form.

6.3.2 Mass flow and inlet volume flow

Effective inlet volume flow, $\dot{V}_{1,\mathrm{us,wet}}$, can be determined from measured mass flow, $\dot{m}_{\mathrm{te}}$, (see E.4.2).

6.3.3 Power (power at coupling), fluid consumption

The power (power at coupling), P_{cou}, of the compressor can be determined in accordance with 5.9.

Where a gearbox is used, the gear losses have to be determined separately (by means, for instance, of measurement of the losses dissipated in the form of heat in the gearbox oil).

Where the compressor is driven by thermal machines, the fluid consumption can be determined from the acceptance measurements in accordance with the rules for acceptance of the respective driving machine (see 5.9).

Documents
Document Sharing Hub
Full document details: BS ISO 5389:2005

6.3.4 Power of the reference process

The power of the reference process can be calculated using the measured inlet and outlet state. Selection of the reference process (isentropic, polytropic, isothermal) depends on the type and manner of operation of the compressor (see E.5.1).

6.3.5 Specific working fluid consumption

Where a thermal engine is used as driving machine and the operating conditions of the compressor and the driver are constant, the performance of the compressor may be expressed in terms of the mass flow of the driver's working fluid per unit effective inlet volume flow of the compressor.

Where compressor operating conditions are subject to change, but the operating conditions of the driving machine are constant, working fluid consumption should preferably be referred to the power of the reference process, e.g. $\dot{m}_{\mathrm{wf}} / P_{\mathrm{Pr}}$.

6.4 Measuring uncertainty of test results

6.4.1 Basic principles

Any measurement involves a degree of uncertainty. Uncertainties also arise from conversion (see 7.2.5).

The data contained in 6.4 presuppose that the requirements specified in Clause 5 are fulfilled. If this is not the case, an agreement shall be made regarding an appropriate increase in the measuring uncertainties for the individual measured variables and of the confidence ranges for the gas data. It is further assumed that all registrable systematic errors in the measurement of individual measured quantities and gas data have been eliminated by means of corrections. A further precondition is that the confidence limits of the reading error and integration error have been rendered negligible by means of an adequate number of readings. The (small) non-registrable systematic errors are also covered by the measuring uncertainties. Quality grades and error limits are sometimes used for determination of the measuring uncertainties of individual measured quantities, since the registrable systematic error of the measuring instruments used, with some exceptions, covers only a fraction of the quality grade or error limit.

The data regarding the determination of measuring uncertainties for individual measured quantities (6.4.2), for confidence ranges of gas data (6.4.3) and for variables of state, are approximations. These approximations can be improved only with a corresponding level of complexity and expense.

In accordance with Reference [7], the measuring uncertainties defined in this International Standard should be taken at the 95 % confidence limits.

The instructions regarding determination of overall uncertainties of measuring results (6.4.4) and their application as semi-axes for the measuring uncertainty ellipses (8.2.4) include convenient simplifications, such as ignoring certain relationships; see Reference [8].

6.4.2 Measuring uncertainty of individual measured variables

6.4.2.1 Measuring uncertainty of pressures

6.4.2.1.1 Precision pressure gauges and pressure transducers

The relative measuring uncertainty, expressed in percent, for pressure difference is

$$\tau_{\Delta p} = \frac{V_{\Delta p}}{\Delta p} \cdot 100 = \pm\, G \frac{\Delta p_{\mathrm{ran}}}{\Delta p_{\mathrm{te}}} \qquad (15)$$

Where the measuring instrument has a quality grade of $G < 0{,}2$, the term $G = 0{,}2$ should nonetheless be used in the equation, in order to make allowance for mounting errors.

Documents
Document Sharing Hub

Full document details: BS ISO 5389:2005

6.4.2.1.2 Liquid columns

If liquid columns are applied, the measuring uncertainty depends above all on the readability of deflection Δl. If no special aids are used, a measuring uncertainty, $V_{\Delta l}$, of ± 1 mm can be achieved.

Relative measuring uncertainty, expressed in percent, in the 100 mm $\leqslant \Delta l \leqslant$ 1 000 mm range is

$$\tau_{\Delta l} = \frac{V_{\Delta l}}{\Delta l} \cdot 100 = \frac{1}{\Delta l} \cdot 100 \tag{16}$$

For $\Delta l >$ 1 000 mm, relative measuring uncertainty, expressed in percent, is

$$\tau_{\Delta l} = 0{,}1$$

6.4.2.1.3 Absolute pressures

The measuring uncertainty of an absolute pressure, p, depends on the uncertainty of the measured ambient pressure, p_{amb}, and the pressure difference, $p - p_{\text{amb}}$:

$$\tau_p = \sqrt{\left(\frac{p_{\text{amb}}}{p} \cdot \tau_{p,\text{amb}}\right)^2 + \left(\frac{p - p_{\text{amb}}}{p} \cdot \tau_{p-p,\text{amb}}\right)^2} \tag{17}$$

6.4.2.2 Measuring uncertainties of temperatures

6.4.2.2.1 General

National standards contain information on the calculation of errors and error limits, with the inclusion of unavoidable minor boundary influences. The provisions in 6.4.2.2.2 to 6.4.2.2.4 are intended to facilitate selection.

6.4.2.2.2 Liquid-in-glass thermometers

The error limit determined by means of calibration and enlarged by mounting allowances should be used as measuring uncertainty, V_t. Normally, V_t = 1 K.

6.4.2.2.3 Thermocouples

Where the entire measuring system has been calibrated recently and precision measuring instruments (quality grade 0,1) are being used for measurement, a measuring uncertainty, V_t, of ± 1,0 K can be used for temperatures to 300 °C.

Substantially smaller measuring uncertainties can be achieved via the use of special instrument combinations, particularly for small temperature differences.

6.4.2.2.4 Resistance thermometers

Where the entire measuring system has been calibrated recently, a measuring uncertainty, V_t, of ± 1,0 K can be used for temperatures to 300 °C. The most accurate system for the particular application of the measuring methods should, however, be used for this purpose.

6.4.2.3 Measuring uncertainties of flow

Tolerance, $\tau_{\dot{m}}$, of the flow measurement using standardized orifices and nozzles shall be calculated in accordance with ISO 5167-1. In cases where it is not possible to completely eliminate pulsation surges, correction factors shall be applied. In addition, the tolerance, $\tau_{\dot{m}}$, shall be enlarged by 20 % of the correction factor.

Documents
Document Sharing Hub
Full document details: BS ISO 5389:2005

Where measurement is performed using meters (e.g. for oil volume flow), the measuring uncertainties of the instruments (specified, for instance, by means of a test certificate) shall be used.

6.4.2.4 Measuring uncertainties of speed of rotation

The relative measuring uncertainty, expressed in percent, of the speed of rotation using calibrated analogue measuring instruments is

$$\tau_N = \frac{V_N}{N} \cdot 100 = \pm G \frac{N_{\text{ran}}}{N_{\text{te}}} \tag{18}$$

The relative measuring uncertainty, expressed in percent, of speed of rotation using calibrated digital measuring instruments is

$$\tau_N = \frac{V_N}{N} \cdot 100 = \pm \frac{S}{N_{\text{te}}} \cdot 100 \tag{19}$$

6.4.2.5 Measuring uncertainty of torque

The relative measuring uncertainty, expressed in percent, of torque using calibrated torsion dynamometers is

$$\tau_{M,\text{t}} = \frac{V_{M,\text{t}}}{M_{\text{t}}} \cdot 100 = \pm G \frac{M_{\text{t,ran}}}{N_{\text{te}}} \cdot 100 \tag{20}$$

The measuring uncertainty stated by the manufacturer of the measuring equipment can be used for torque measurement using cradle-type motors.

6.4.2.6 Measuring uncertainty of power at the coupling of the driving machine

The relative measuring uncertainty, expressed in percent, of power at the coupling via the measured electrical power of an electric motor is

$$\begin{aligned} \tau_{P,\text{cou}} &= \frac{V_{P,\text{cou}}}{P_{\text{cou}}} \cdot 100 = \pm \sqrt{\left(\frac{V_{P,\text{el}}}{P_{\text{el}}}\right)^2 + \left(\frac{V_{\eta,\text{M}}}{\eta_{\text{M}}}\right)^2} \cdot 100 \\ &= \pm \sqrt{\tau_{P,\text{el}}^2 + \tau_{\eta,\text{M}}^2} \end{aligned} \tag{21}$$

where

$V_{P,\text{el}}$ is the measuring uncertainty of electrical energy consumed;

$V_{\eta,\text{M}}$ is the uncertainty of motor efficiency. The supplier of the electric motor shall supply, with the motor, curves stating motor efficiency as a function of load and shall state the degree of uncertainty.

For the calculation of power at the coupling from measured electrical power consumption and measured individual losses, the measuring uncertainties of these individual losses shall be taken into account in a manner appropriate to the method of their measurement.

For the measurement of power at the coupling on other driving machines, the relative measuring uncertainty, $\tau_{P,\text{cou}}$, shall be calculated in accordance with the corresponding standard.

AVA Documents
Document Sharing Hub

Full document details: BS ISO 5389:2005

6.4.2.7 Measuring uncertainties of power from temperature difference and mass flow

Where power (e.g. gas power, mechanical power losses) is determined from a temperature difference and a mass flow, the measuring uncertainty, expressed in percent, is

$$\tau_P = \frac{V_P}{P} \cdot 100 = \pm \sqrt{\tau_{\dot{m}}^2 + \tau_{\mathrm{cp}}^2 + \frac{V_{t1}^2 + V_{t2}^2}{(t_2 - t_1)^2} \cdot 100^2} \qquad (22)$$

6.4.2.8 Measuring systems

Since the measured value is generally displayed on measuring instruments at the end of a measuring system, the rules for measuring systems specified in applicable standards, e.g. Reference [7], shall also be observed.

6.4.3 Confidence ranges for gas data

6.4.3.1 General

Where gas composition fluctuates, particular care shall be devoted to suitable and correct sampling. The confidence ranges for gas data shall be increased if these fluctuations exceed the ranges that can be balanced out by means of suitable sampling.

The information in 6.4.3.2 to 6.4.3.4 also presupposes suitable chemical or physical analytical methods for determination of gas composition.

6.4.3.2 Gas constant

6.4.3.2.1 Pure gases

Where the gas constant is taken from recognized equations of state, its confidence range, V_R, can be ignored.

6.4.3.2.2 Gas mixtures

The confidence range, V_R, of the gas constants can be ignored, provided the conditions of 6.4.3.1 are met. If the gas constant is determined by means of measurement of density using precision measuring instruments as specified in 5.4, a relative confidence range V_R/R of ± 0,5 % should be used.

6.4.3.3 Compressibility factor

6.4.3.3.1 Pure gases

The confidence range, V_Z, of the compressibility factor can be found in the relevant literature for the pure gases most commonly compressed; see Reference [9].

Where the compressibility factor is determined using equations of state, confidence range, V_Z, should be estimated.

6.4.3.3.2 Gas mixtures

The greatest accuracy level can be achieved by means of measurement of the compressibility factor of the gas mixture.

For the estimation of the confidence range of a compressibility factor determined from equations of state, it is principally the confidence range, V_Z, of the compressibility factor of the component occupying the greatest proportion by volume and the confidence range, V_Z, of the component whose compressibility factor most greatly deviates from 1 that should be used.

Documents
Document Sharing Hub
Full document details: BS ISO 5389:2005

6.4.3.4 Isentropic exponent

6.4.3.4.1 Pure gases

Where the isentropic exponent for approximately perfect gases is taken from recognized tables, the confidence range, V_k, of the isentropic exponent can be ignored.

No accurate data are available on the confidence ranges, V_k, of the isentropic exponents of gases which deviate greatly from perfect behaviour; they can be estimated.

6.4.3.4.2 Gas mixtures

The same remarks as those made in 6.4.3.4.1 apply, provided the conditions of 6.4.3.1 are met.

6.4.4 Uncertainty of measuring results

6.4.4.1 General

The equations for calculation of the relative uncertainties of measured results are compiled in 6.4.4.2. They state the semi-axes for the measuring uncertainty ellipses (see 8.2.4) and shall be expanded by the additional tolerances if necessary (see 7.2.5):

$$\tau_{\text{tot}} = \pm\left(\left|\tau_{\text{res}}\right| + \left|\tau_{\text{dev}}\right|\right) \tag{23}$$

These measuring uncertainty ellipses are plotted around the measured points.

In the event that only one guarantee point and one test point are available, a relative total uncertainty of measuring results can be determined for the power or related power if this is converted to the guaranteed inlet volume flow and pressure ratio, Π_g. In this case, the equations for relative measuring uncertainties for related power apply approximately (see 6.4.4.2.4). This should be applied to the guarantee comparison in accordance with 8.2.2.

6.4.4.2 Relative uncertainty of measuring results calculated by differentiation

Formulae derived according to Annex D.

6.4.4.2.1 For the inlet volume flow $\tau_{\text{res},\dot{V}}$

The relative uncertainty of measuring results for inlet volume flow is

$$\tau_{\text{res},\dot{V}} = \pm\sqrt{\tau_{\dot{m}}^2 + \tau_N^2 + \tau_{p1}^2 + \tau_{T1}^2 + \tau_{Z1}^2} \tag{24}$$

6.4.4.2.2 For the pressure ratio, $\tau_{\text{res},\Pi}$

The relative uncertainty of measuring results for the pressure ratio is

$$\tau_{\text{res},\Pi} = \pm\frac{1}{X_N{}^2}\sqrt{\left(\ln\Pi\right)_v^2\left(4\cdot\tau_N^2 + \tau_{T1}^2 + \tau_R^2 + \tau_{Z1}^2\right) + \tau_{p1}^2 + \tau_{p2}^2} \tag{25}$$

Documents
Document Sharing Hub
Full document details: BS ISO 5389:2005

6.4.4.2.3 For the specific polytropic compression work, $\tau_{\text{res},y,\text{p}}$

The relative uncertainty of measuring results for the specific polytropic compression work is

$$\tau_{\text{res},y,\text{po}} = \frac{V_{y,\text{p}}}{y_{\text{p}}} = \pm\sqrt{\left(\frac{1}{\ln\frac{p_2}{p_1}}\right)^2 \cdot \left(\tau_{p1}^2 - \tau_{p2}^2\right) + \left(\frac{T_2}{T_2 - T_1} - \frac{1}{\ln\frac{T_2}{T_1}}\right)^2 \cdot \tau_{T2}^2 + \left(\frac{T_1}{T_2 - T_1} - \frac{1}{\ln\frac{T_2}{T_1}}\right)^2 \cdot \tau_{T1}^2 + \tau_R^2 + \tau_{Z,m}^2} \quad (26)$$

6.4.4.2.4 For power, $\tau_{\text{res},P,\text{cou}}$, related power, $\tau_{\text{res}(P,\text{cou}/\dot{V})}$, and efficiency, $\tau_{\text{res},\eta,\text{cou}}$

The relative uncertainties of measuring results required for formulation of the equations for relative uncertainty of measuring results for power, related power and efficiency, and the factors by which these relative individual measuring uncertainties are multiplied, are compiled in Table 1.

Table 1 — Factors or relative measuring uncertainties for individual measured variables for determination of uncertainty of measuring results for determination of power, related power and efficiency in accordance with 6.4.4.2.4

Relative measuring uncertainty for individual measured values	Uncooled compressor			Cooled compressor $\vartheta_{j,\text{te}} = \vartheta_{j,\text{g}}$			Cooled compressor $\vartheta_{j,\text{te}} \neq \vartheta_{j,\text{g}}$		
	Case 1 [c]	Case 2 [d]	Case 3 [e]	Case 1 [c]	Case 2 [d]	Case 3 [e]	Case 1 [c]	Case 2 [d]	Case 3 [e]
$\tau_{P,\text{cou}}$	0	$\frac{1}{1+1/\varepsilon_2}$	0	0	$\frac{1}{1+1/\varepsilon_2}$	0	0	$\frac{1}{1+1/\varepsilon_2}$	0
$\tau_{P\text{i}}$	$\frac{P_{\text{i,co}}}{P_{\text{cou,co}}}$	0	0	$\frac{P_{\text{i,co}}}{P_{\text{cou,co}}}$	0	0	$\frac{P_{\text{i,co}}}{P_{\text{cou,co}}}$	0	0
$\tau_{P,\text{mech}}$	$\frac{P_{\text{mech,co}}}{P_{\text{cou,co}}}$	$\frac{1}{1+\varepsilon_2}$	$\frac{1}{1+\varepsilon_2}$	$\frac{P_{\text{mech,co}}}{P_{\text{cou,co}}}$	$\frac{1}{1+\varepsilon_2}$	$\frac{1}{1+\varepsilon_2}$	$\frac{P_{\text{mech,co}}}{P_{\text{cou,co}}}$	$\frac{1}{1+\varepsilon_2}$	$\frac{1}{1+\varepsilon_2}$
$\tau_{M\text{t}}$	0	0	$\frac{1}{1+1/\varepsilon_2}$	0	0	$\frac{1}{1+1/\varepsilon_2}$	0	0	$\frac{1}{1+1/\varepsilon_2}$
τ_N [a]	1	1	0	1	1	0	$1+2\varepsilon_3 \ln \Pi_{\text{A,co}}$		$2\varepsilon_3 \ln \Pi_{\text{A,co}}$
	0	0	1	0	0	1	$2\varepsilon_3 \ln \Pi_{\text{A,co}}$		$1+\ldots$ $\ldots 2\varepsilon_3 \ln \Pi_{\text{A,co}}$
$\tau_{\dot{m}}$ [a]	0								
	1								
τ_{p1} [a]	$1-\frac{1}{\ln \Pi_{\text{te}}}$								
	$\frac{1}{\ln \Pi_{\text{te}}}$								
τ_{T1} [a]	0						$\varepsilon_3 \ln \Pi_{\text{A,co}}$		
	1						$1+\varepsilon_3 \ln \Pi_{\text{A,co}}$		
τ_{Z1} [a]	0						$\varepsilon_3 \ln \Pi_{\text{A,co}}$		
	1						$1+\varepsilon_3 \ln \Pi_{\text{A,co}}$		

Documents
Document Sharing Hub
Full document details: BS ISO 5389:2005

Table 1 *(continued)*

Relative measuring uncertainty for individual measured values	Uncooled compressor			Cooled compressor $\vartheta_{j,\mathrm{te}} = \vartheta_{j,\mathrm{g}}$			Cooled compressor $\vartheta_{j,\mathrm{te}} \neq \vartheta_{j,\mathrm{g}}$		
	Case 1 [c]	Case 2 [d]	Case 3 [e]	Case 1 [c]	Case 2 [d]	Case 3 [e]	Case 1 [c]	Case 2 [d]	Case 3 [e]
τ_R [a]	0						$\varepsilon_3 \ln \Pi_{\mathrm{A,co}}$		
	1						$1+\varepsilon_3 \ln \Pi_{\mathrm{A,co}}$		
τ_{p2}	$1/\ln \Pi_{\mathrm{te}}$								
τ_k	ε_1	ε_1	ε_1	0	0	0	0	0	0
$\tau_{T1,\mathrm{B}}$	0	0	0	0	0	0	ε_3	ε_3	ε_3
$\tau_{Z1,\mathrm{B}}$	0	0	0	0	0	0	ε_3	ε_3	ε_3
$\tau_{T1,j}$ [b]	0	0	0	$\frac{z-1}{z}$	$\frac{z-1}{z}$	$\frac{z-1}{z}$	$\frac{z-2}{z-1}$	$\frac{z-2}{z-1}$	$\frac{z-2}{z-1}$

[a] Here, the factors for determination of uncertainty of measuring results for power at coupling $\tau_{\mathrm{res},P\mathrm{cou}}$, not including τ_{dev}, are shown in the top line, and those for related power $\tau_{\mathrm{res}(P\mathrm{cou}/\dot{V})}$ and for efficiency $\tau_{\mathrm{res},\eta\mathrm{cou}}$, not including τ_{dev}, in the bottom line.

[b] For $\vartheta_{j,\mathrm{te}} = \vartheta_{j,\mathrm{g}}$ $T_{1j\mathrm{av}} = \frac{\sum_{j=\mathrm{II}}^{j=z} T_{1j}}{z-1}$, $\dot{V}_{tj\mathrm{av}} = \frac{\sum_{j=\mathrm{II}}^{j=z} V_t}{z-1}$ and $\tau_{T1j} = \frac{\dot{V}_{tj\mathrm{av}}}{T_{1j\mathrm{av}}}$

For $\vartheta_{j,\mathrm{te}} \neq \vartheta_{j,\mathrm{g}}$ $T_{1j\mathrm{av}} = \frac{\sum_{j=\mathrm{III}}^{j=z} T_{1j}}{z-2}$, $\dot{V}_{tj\mathrm{av}} = \frac{\sum_{j=\mathrm{III}}^{j=z} V_t}{z-2}$ and $\tau_{T1j} = \frac{\dot{V}_{tj\mathrm{av}}}{T_{1j\mathrm{av}}}$

[c] Case 1: Power at the coupling, $P_{\mathrm{cou,te}}$, is determined by means of measurement of gas power $P_{\mathrm{i,te}}$ and mechanical losses $P_{\mathrm{mech,te}}$.

[d] Case 2: Power at the coupling is measured on the driving machine.

[e] Case 3: Power at the coupling is determined by means of measurement of torque $M_{\mathrm{t,te}}$ and rotational speed N_{te}.

Coefficients:

$$\varepsilon_1 = \frac{1}{1-k_{\mathrm{te}}} + \frac{1}{k_{\mathrm{te}}}\left(\frac{\ln \Pi_{\mathrm{te}}}{1-\Pi_{\mathrm{te}}^{\left(\frac{1-k}{k}\right)_{\mathrm{te}}}}\right) \tag{27}$$

$$\varepsilon_2 = \frac{P_{\mathrm{cou,te}}}{P_{\mathrm{mech,co}}\frac{P_{\mathrm{i,te}}}{P_{\mathrm{i,co}}} - P_{\mathrm{mech,te}}} \tag{28}$$

$$\varepsilon_3 = \frac{P_{\mathrm{iB,co}}}{P_{\mathrm{i,co}}} \tag{29}$$

AVA Documents
Document Sharing Hub

Full document details: BS ISO 5389:2005

EXAMPLE The equation for relative uncertainty of measured results for power at the coupling of a cooled compressor ($\vartheta_{j,te} = \vartheta_{j,g}$) can be formulated as follows in accordance with Table 2 if power at the coupling in the test $P_{\text{cou,te}}$ has been determined by means of measurement of torque and rotational speed (case 3):

$$\tau_{\text{res},(P\text{cou})} = \pm\left\{\left(\frac{1}{1+\varepsilon_2}\tau_{P\text{mech}}\right)^2 + \left(\frac{1}{1+\frac{1}{\varepsilon_2}}\tau_{M\text{t}}\right)^2 + \left(2\cdot\varepsilon_3\cdot\ln\Pi_{\text{A,co}}\cdot\tau_N\right)^2 + \left[\left(1-\frac{1}{\ln\Pi_{\text{te}}}\right)\tau_{p1}\right]^2 + \ldots\right.$$

$$\ldots + \left(\varepsilon_3\cdot\ln\Pi_{\text{A,co}}\cdot\tau_{T1}\right)^2 + \left(\varepsilon_3\cdot\ln\Pi_{\text{A,co}}\cdot\tau_{Z1}\right)^2 + \left(\varepsilon_3\cdot\ln\Pi_{\text{A,co}}\cdot\tau_R\right)^2 + \ldots$$

$$\left.\ldots + \left(\frac{1}{\ln\Pi_{\text{te}}}\tau_{p2}\right)^2 + \left(\varepsilon_3\cdot\tau_{T_{1,\text{B}}}\right)^2 + \left(\varepsilon_3\cdot\tau_{Z_{1,\text{B}}}\right)^2 + \left(\frac{z-2}{z-1}\tau_{T_{1,j}}\right)^2\right\}^{1/2} \quad (30)$$

6.4.4.3 Determination of measuring uncertainty using the difference method

The uncertainty of measuring results $\tau_{\text{res},W}$ of a result function, W, (e.g. steam consumption) can be determined as follows, particularly in the case of complicated functional interactions whose derivation by means of closed mathematical solutions is difficult.

The result function, W, is based on all measured values, converted to the guarantee preconditions and corrected to the guarantee value.

For example, for $W = P_{\text{cou,g}}$, with $\tau_{\text{res},W}$ expressed in percent:

$$W = P_{\text{i,co}}\cdot\frac{y_{T,\text{g}}}{y_{T,\text{co}}}\cdot\frac{V_{1,\text{g}}}{V_{1,\text{co}}} + P_{\text{mech,co,g}} \quad (31)$$

$$\tau_{\text{res},W} = \frac{V_W}{W}\cdot 100 = \pm\sqrt{\sum\left(\frac{\partial W}{\partial x_i}\cdot\frac{V_{xi}}{W}\right)^2}\cdot 100$$

$$= \pm\sqrt{\sum f_{xi}^2}\cdot 100 \quad (32)$$

$$f_{xi} = \frac{W\left(x_i + V_{xi}\right) - W\left(x_i - V_{xi}\right)}{2\cdot W\left(x_i\right)} \quad (33)$$

For this purpose, the result function, W, for all measured variables and gas data, x_i, contained therein is calculated using the values increased or decreased by the individual measuring uncertainty V_{xi}, and the mean relative deviation f_{xi} of the result function, W, is calculated from their difference at the position of the measured value x_i.

Documents
Document Sharing Hub
Full document details: BS ISO 5389:2005

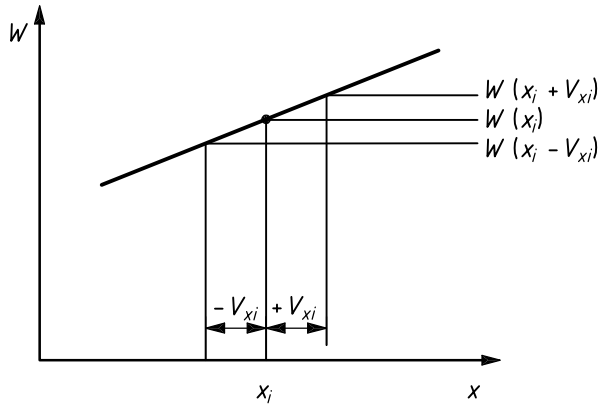

Figure 1 — Variation of a result function versus an individual measuring uncertainty

6.4.4.4 Relative uncertainty of measuring results for single-stage measurements on multi-stage compressors

The following equations apply in the case of the composition of the overall performance curve from the curves of single stages or sections measured separately:

for the relative measuring uncertainty for volume flow:

$$\tau_{\text{comb},\dot{V}} = \left(1 + 0{,}2 \cdot \sqrt{z-1}\right) \frac{\sum \tau_{\dot{V},j}}{z} \tag{34}$$

for the relative measuring uncertainty for the pressure ratio:

$$\tau_{\text{comb},\Pi} = \left(1 + 0{,}2 \cdot \sqrt{z-1}\right) \cdot \frac{\sum \left(\tau_{\Pi,j} \cdot W_{\text{co},j}\right)}{\sum W_{\text{co},j}} \tag{35}$$

for the relative measuring uncertainty for power:

$$\tau_{\text{comb},P} = \left(1 + 0{,}2 \cdot \sqrt{z-1}\right) \cdot \frac{\sum \left(\tau_{P,j} \cdot P_{\text{co},j}\right)}{\sum P_{\text{co},j}} \tag{36}$$

The factors 0,2 and $z - 1$ make allowance for the unavoidable inaccuracies of separate measurement of the individual sections and in compilation of the results.

6.4.4.5 Weighted relative uncertainty of measuring results

If different measuring methods have been used, weighted measuring values and uncertainties can be obtained following Reference [7]:

Weighted measuring result:

$$\bar{W}_{\gamma} = \frac{\sum \left(W_i \cdot \gamma_i\right)}{\sum \gamma_i} \tag{37}$$

Documents
Document Sharing Hub
Full document details: BS ISO 5389:2005

with

$$\gamma_i = \left(\frac{1}{V_{Wi}}\right)^2 \tag{38}$$

Weighted uncertainty of measuring results:

$$V_{\bar{W}y} = \frac{1}{\sqrt{\sum \gamma_i}} = \frac{1}{\sqrt{\sum \left(\frac{1}{V_{Wi}}\right)^2}} \tag{39}$$

Weighted relative uncertainty of measuring results:

$$\tau_{\bar{W}y} = \frac{V_{\bar{W}y}}{\bar{W}_\gamma} \tag{40}$$

7 Conversion of test results to guarantee conditions

7.1 General

7.1.1 Purpose of conversion

The test results can be directly compared with the guarantee values only if the compressor is measured precisely under the guarantee operating conditions during the acceptance test.

If the operating conditions during the test deviate from those specified in the guarantee, the test results shall be converted to the guarantee operating conditions. Only such converted test data may be compared with the guarantee values in the guarantee comparison as specified in Clause 8.

7.1.2 Object of conversion

The values converted are essentially the following:

— effective inlet volume flow, $\dot{V}_{1,us}$;

— pressure ratio, Π, or head;

— and power at the coupling, P_{cou}.

Power at the coupling P_{cou} is composed additively of gas power P_i and mechanical loss P_{mech}, which are converted separately. Allowance shall be made, if necessary, for the influence of leakage flows.

7.2 Conversion

7.2.1 Adherence to the requirements deriving from similarity theory

Conversion of test results from test conditions to the guarantee conditions is generally possible if similarity of the flow in the compressor is ensured during conversion of a test point to guarantee conditions, i.e., provided the essential conditions can be maintained for identical reference process work coefficients, see Equation (6), and for identical flow coefficients, see Equation (5).

Where variable geometry systems for control of flow in the compressor (e.g. adjustable inlet guide vanes or diffuser vanes) are installed, the conversion will apply only to one constant setting of such systems. These

Documents
Document Sharing Hub
Full document details: BS ISO 5389:2005

similarity conditions relate only to the flow in the compressor, and not to mechanical losses. For this reason, these shall be separately measured and converted for the guarantee comparison (see 7.2.4.4).

a) Identical reference process work coefficients and volume flow coefficients

Under identical reference process work coefficients and flow coefficients, ψ and φ, the ratio of a characteristic flow velocity in the compressor to tip speed has an identical value under test and under guarantee conditions. For this reason, it is necessary, but not sufficient, that φ and ψ or $\dot{V}_1/N$ or Y/N^2 be kept constant for conversion of the test point.

b) Identical isentropic exponents

The change of state of the compressed gas can be kept identical under test and guarantee conditions in all stages of the compressor only if the isentropic exponents are identical.

c) Identical Mach numbers

In order for the velocity ratios to be identical in a gas at every flow path location, the condition shall be imposed, in addition to the requirement for identical reference process work and flow coefficients, that the volume flow ratios (volume flow referred to inlet volume flow) remain constant at every flow path location under test and guarantee conditions. The requirement for identical volume flow ratios in all stages of the compressor is met — always assuming identical isentropic exponents — if the tip Mach numbers Ma_u are identical under test and guarantee conditions. Under these preconditions, identical tip Mach number signifies simultaneously identical local Mach number (flow velocity referred to the respective local sonic velocity).

d) Identical ϑ_j ratios in the individual stages

The similarity condition of identical ϑ_j ratios in the individual stages signifies that the values $\vartheta_j = (RZ_1T_1)_j/(RZ_1T_1)_\mathrm{I}$ are constant (j = I, II, ...). In uncooled compressors, this requirement is fulfilled anyway given identical isentropic exponents and identical tip Mach number.

In cooled compressors, the condition ϑ_j = const shall be achieved by means of corresponding adjustment of the intercooler.

The cooler performance cannot be assessed if the test values diverge from the guarantee conditions. If necessary, performance shall be tested separately.

e) Identical Reynolds numbers

In order that the boundary layer of the flow, and thus also the flow pattern influenced by it, remain constant, the Reynolds number, as well as the parameters already mentioned, shall also remain constant in the conversion calculation.

f) Identical heat exchange characteristic

In cases where heat exchange has an influence on the compression process, the corresponding characteristic variables shall also remain identical.

7.2.2 Approximations to the requirements deriving from similarity theory

7.2.2.1 General

Since it is, in general, not possible to fulfil all similarity conditions simultaneously, it will be necessary to neglect individual conditions to a greater or minor extent; see Reference [10].

In compressors operating at flow velocities in the sonic velocity range, it is necessary to check whether the deviations in Mach numbers during the test from those in the guarantee conditions are within the permissible

AVA Documents
Document Sharing Hub

Full document details: BS ISO 5389:2005

range. In this context, however, it is not the tip Mach numbers Ma_u for which allowance shall be made, but instead the local Mach numbers (ratio of local flow velocity to local sonic velocity).

7.2.2.2 Negligence of influence of certain characteristic variables

If it is not possible to satisfy all the conditions required for the characteristic variables simultaneously, it is necessary to dispense with the equality of those characteristic variables which generally have only secondary influence on efficiency and are of significance only in boundary areas, once their magnitude has been checked under test and guarantee conditions.

As heat exchange generally has only a slight influence on the compression process in uncooled compressor stages, the corresponding characteristic variables for heat transfer play a role only in case of extreme deviations in test conditions. Intercoolers are not considered in this context.

7.2.2.3 Permissible deviations of characteristic variables whose Influence cannot be neglected

7.2.2.3.1 Preconditions

Similarity in the entire compressor is ensured provided ψ_p and φ of each stage, Ma_u, k, ϑ_j and if necessary Re remain identical.

Approximations may be appropriate in cases where the tip speed Mach number or the isentropic exponent k, or both variables, in test conditions cannot be precisely adopted to the guarantee conditions in uncooled compressors; and in cooled compressors if, in addition to the two conditions mentioned above, the temperature ratios cannot be maintained either.

Deviations of the Reynolds number are permissible up to certain limits (see Figure 2). If the Reynolds number in the test is lower than the limits of Figure 2, only a Reynolds number correction, in accordance with Annex C, within the limits of Figure 2 shall be made. The influence of the Reynolds number on efficiency, specific compression work and flow coefficient shall be taken into account when determining the test conditions (see 7.2.2.3.2) and converting test results to guarantee conditions (see 7.2.4.1).

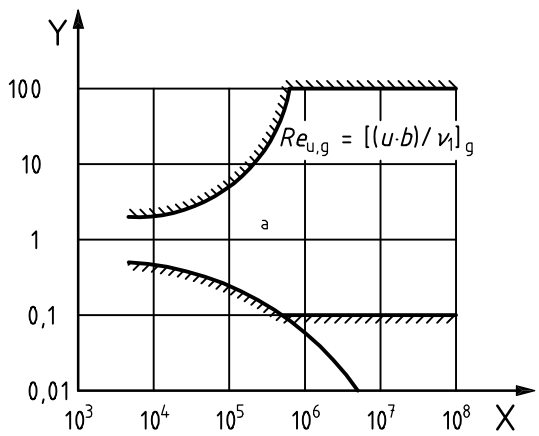

Key

X guarantee Reynolds number, $Re_{u,g}$

Y Reynolds number ratio, $\frac{Re_{u,te}}{Re_{u,g}}$

a Permissible range of application.

Figure 2 — Permissible range of application for conversion

Documents
Document Sharing Hub
Full document details: BS ISO 5389:2005

The approximation procedures start from the precondition that at $\varphi_{te} = \varphi_g$ or $\left(\dot{V}_1 / N\right)_{te} = \left(\dot{V}_1 / N\right)_g$ the velocity ratios, and thus the volume flow ratios in the compressor during the test, can deviate up to a certain percentage from the ratios under guarantee conditions without a substantial effect on efficiency and specific work of compression.

7.2.2.3.2 Permissible deviation of volume flow ratio, ϕ

The greatest deviations in volume flow always occur for $n_{te} = n_g$ at the end of the compression process.

For $n_{te} \neq n_g$, the condition of identical volume flow ratios throughout the compression process is achievable only approximately, since the maximum volume flow deviations can occur within the compressor as a result of a divergent pattern in change of state.

The inner tolerance limit for deviation of the ratio of volume flow ratios ϕ is $\Delta\phi_{tol} = \pm 0{,}01$. It shall be checked if this limit can be maintained by means of variation of test values N_{te}, R_{te}, $Z_{1,te}$ or $T_{1,te}$. In such cases, the test should be performed without the use of a supplementary tolerance. Otherwise, it has to be checked whether the test can still be performed within the outer tolerance limit $\Delta\phi_{tol} = 0{,}05$ (see 7.2.5). In this case, the test can be performed with approximated similarity using a supplementary tolerance (Figures 6 and 7).

The permissible ratio of reduced speeds $X_{N,tol}$, Equation (2), can be calculated using the permissible deviation $\Delta\phi_{tol}$ of the ratio of volume flow ratios, ϕ, Equation (1); see Annex A.

If the outer tolerance limits do not suffice, it shall be checked on a case-to-case basis if tests may still be performed according to the method described in Annex B.

If the check of the test values indicates that the values $\eta_{p,te}$ and $(p_2/p_1)_{te}$ deviate from the values $\eta_{p,pr}$ and $(p_2/p_1)_{pr}$ predicted for the test conditions, the check for similarity conditions should be repeated using these values.

7.2.2.3.3 Permissible deviations of tip Mach Number

The permissible deviations of the volume flow ratio themselves include a limitation on the permissible deviations of tip Mach Number.

$$\frac{Ma_{u,te}}{Ma_{u,g}} = X_N \cdot \sqrt{\frac{k_{1,g}}{k_{1,te}}} \tag{41}$$

Mach number effects shall be considered if the critical relative Mach number Ma_{crit} (localy sonic velocity in the stage) is reached under guarantee or test conditions for the test point and the converted point.

7.2.2.3.4 Permissible deviations of the Reynolds number

It is necessary to check the deviation of the test Reynolds number from that of the guarantee conditions. Allowance is made for the influence of this deviation on operation of compressors by means of suitable correction provisions, which, however, may be used only in specific cases.

The cases for application of the correction equations and the selection of a suitable test Reynolds number are determined by two factors:

— accuracy of the correction equation for various Reynolds numbers;

— accuracy of the test results achieved at reduced inlet pressures or lower speeds.

In the case of centrifugal compressors, the well-proven method for correction of the Reynolds number (see Annex C) shall be used. The limits of application of the equations are shown in Figure 2.

AVA Documents
Document Sharing Hub

Full document details: BS ISO 5389:2005

In the case of axial compressors, the correct method for Reynolds number correction depends on the blade characteristics used by the compressor manufacturer. For this reason, the method and the application ranges should be agreed between the manufacturer and the user.

7.2.3 Subdivision of conversion cases

7.2.3.1 Classes of conversion

According to the test conditions, the following classes derive for adjustment, test and conversion:

— Class A: Test, maintaining the inner tolerance limit $\Delta\phi_{tol} = \pm 0{,}01$. If this is not possible:

— Class B: Test, maintaining the outer tolerance limit $\Delta\phi_{tol} = \pm 0{,}05$. If this is not possible:

— Class C: Test beyond the outer tolerance limit.

7.2.3.2 Conversion according to classes A and B

These cases are shown schematically in Tables 2 and 3 and in Annex A.

7.2.3.3 Conversion according to class C

This case is described in Annex B.

Table 2 — Adjustment, test, conversion: uncooled compressor

	$n_{te} = n_g$		$n_{te} \neq n_g$	
Case	**3a**	**3b**	**3c**	**3d**
Example			**Annex F, Example 1**	**Annex F, Example 5**
Ratio of reduced speeds, see 7.2.2.3.2	Set compressor at $X_{N,tol} = \sqrt{\psi_{p,g}/\psi_{p,te}}$. Deviations within tolerance limit $\Delta\phi_{tol} = \pm 0{,}01$ as per Annex A are permissible. No supplementary tolerance for conversion.	If adjacent condition cannot be met, set compressor at $X_{N,tol}$ within outer tolerance limit $\Delta\phi_{tol} = \pm 0{,}05$ as per Annex A. Supplementary tolerance for conversion as per 7.2.5.	Set compressor with X_N to be within inner tolerance limit $\Delta\phi_{tol} = \pm 0{,}01$ as per Annex A. No supplementary tolerance for conversion.	If adjacent condition cannot be met, set compressor with X_N to be within outer tolerance limit $\Delta\phi_{tol} = \pm 0{,}05$ as per Annex A. Supplementary tolerance for conversion as per 7.2.5.
Mach number: see 7.2.2.3.3	If $Ma_{u,te} \neq Ma_{u,g}$, check whether changes caused by Mach number occur in the performance curve range relevant for the guarantee comparison (critical Mach number, choke Mach number).			
Reynolds number: see 7.2.2.3.4	Check whether $Re_{u,te}/Re_{u,g}$ is within the range permissible for conversion of efficiency (in accordance with Figure 2 for centrifugal compressors).			
Performance curve	Operation of one point in the vicinity of the guarantee point or not less than two test points which enclose the guarantee value for specific work of compression or for inlet volume flow (depending on guarantee comparison).			
Conversion	7.2.4.1, Figure 3.			
Converted values	Check whether the similarity conditions have been met in the test.			
Guarantee comparison	Clause 8.			

Documents
Document Sharing Hub
Full document details: BS ISO 5389:2005

Table 3 — Adjustment, test, conversion: intercooled compressor

	$n_{te} = n_g$ and $Re_{u,te} \approx Re_{u,g}$		Other application cases, for instance: a) $n_{te} = n_g$ and $Re_{u,te} \neq Re_{u,g}$ b) $n_{te} \neq n_g$ c) Inward sidestreams or extractions	
Case	**4a**	**4b**	**4c**	**4d**
Example	**Annex F, Example 4**	**Annex F, Example 3**		**Annex F, Example 2**
Ratio of reduced speeds: See 7.2.2.3.2	Set first section at $X_{N,tol} = 1$. Deviations within inner tolerance limit $\Delta\phi_{tol} = \pm 0{,}01$ as per Annex A are permissible. No supplementary tolerance for conversion.	Set the individual uncooled sections with X_N to be within inner tolerance limit $\Delta\phi_{tol} = \pm 0{,}01$ as per Annex A. No supplementary tolerance for conversion. If the above condition cannot be met, set first section at X_N within outer tolerance limit $\Delta\phi_{tol} = \pm 0{,}05$ as per Annex A. Supplementary tolerance for first section for conversion as per 7.2.5.	Set the individual uncooled sections with X_N to be within inner tolerance limit $\Delta\phi_{tol} = \pm 0{,}01$ as per Annex A. No supplementary tolerance for conversion for these sections.	If the adjacent condition cannot be met for all uncooled sections, set the relevant sections at X_N within the outer tolerance limit $\Delta\phi_{tol} \pm 0{,}05$ as per Annex A. Supplementary tolerance for conversion as per 7.2.5 for the relevant sections.
RZ_1T_1, ratio as defined in 3.2.8	Set stage inlet temperatures in such a way that $\frac{\vartheta_{j,te}}{\vartheta_{j,g}} = 1$	If the adjacent condition cannot be met, subdivide into uncooled first section and intercooled downstream section at $\frac{\vartheta_{j,B,te}}{\vartheta_{j,B,g}} = 1$	Wherever possible, set the stage inlet temperatures in such a way that the test can be run at an identical speed for all sections.	
Mach numbers: see 7.2.2.3.3	If $Ma_{u,te} \neq Ma_{u,g}$, check whether changes due to Mach number occur in the characteristic curve range relevant for the guarantee comparison (critical Mach number, choke Mach number).			
Reynolds number: see 7.2.2.3.4	Overall conversion via specific isothermal work of compression and isothermal total efficiency only possible if $Re_{u,te} \approx Re_{u,g}$. (No change in polytropic stage efficiency.)	Check that $Re_{u,te}/Re_{u,g}$ is in the permissible range for conversion of efficiency (in accordance with Figure 2 for centrifugal compressors).		

Documents
Document Sharing Hub
Full document details: BS ISO 5389:2005

Table 3 *(continued)*

	$n_{te} = n_g$ and $Re_{u,te} \approx Re_{u,g}$		Other application cases, for instance: a) $n_{te} = n_g$ and $Re_{u,te} \neq Re_{u,g}$ b) $n_{te} \neq n_g$ c) Inward sidestreams or extractions	
Case	**4a**	**4b**	**4c**	**4d**
Example	**Annex F, Example 4**	**Annex F, Example 3**		**Annex F, Example 2**
Performance curve	As for uncooled compressors in Table 2.	First uncooled section as the intercooled high-pressure section indicated in Table 2 with adequate number of characteristic curve points for superpositioning.	First uncooled section as in Table 2, all other sections with adequate number of performance curve points for superpositioning.	
Conversion	7.2.4.2.1, Figure 4	7.2.4.2.1, Figure 5.	As per Table 2 for each uncooled section, then superpositioning with recooling temperatures and pressure losses, and mass flow ratios as per guarantee conditions if necessary, Section 7.2.4.2.2.	
Converted values	Check whether similarity conditions were met in test.			
Guarantee comparison	Clause 8.			

7.2.4 Conversion equations

7.2.4.1 Conversion for uncooled compressors or sections

Provided the conditions specified in 7.2.1 and 7.2.2 are met and the gas behaves approximately perfect, the test values can be converted to guarantee conditions using the procedure shown in Figure 3.

For real gas behaviour, the variables 1, 3, 6 and 7 in Figure 3 should be calculated from the temperatures and pressures measured, either using the compressibility functions; see Equations (E.22) and (E.23), or using gas data programs. At small pressure ratios, calculation can also be effected by means of the isentropic change of state; see Equation (E.74).

Documents
Document Sharing Hub
Full document details: BS ISO 5389:2005

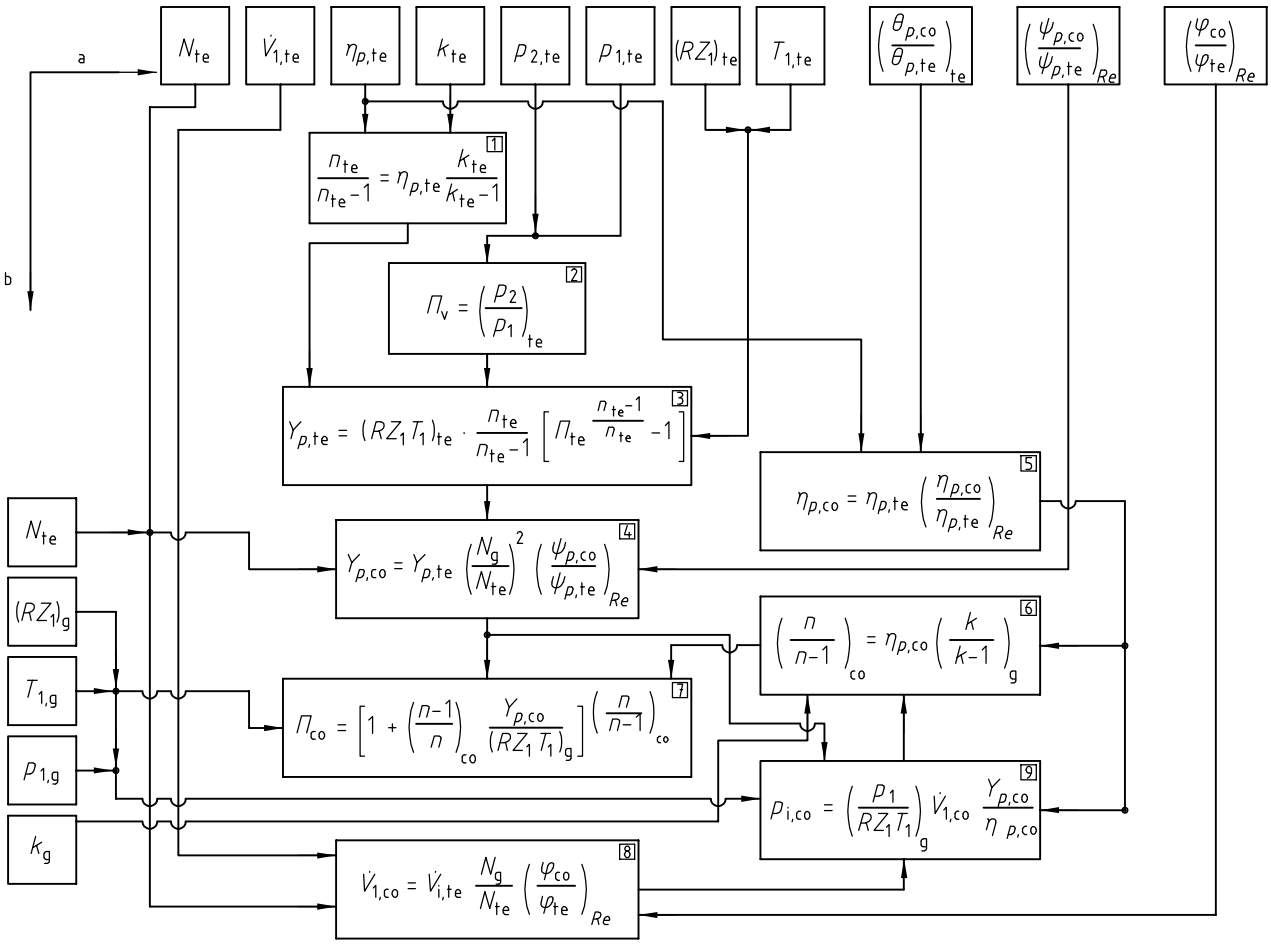

a Test values.

b Guarantee conditions.

Figure 3 — Calculation for uncooled compressors or sections with approximately perfect gas behaviour

7.2.4.2 Conversion for cooled compressors

7.2.4.2.1 Overall conversion

Provided the conditions specified in 7.2.1 and 7.2.2 are fulfilled and that the test conditions achieved mean that there is no need to make allowance for the influence of the Reynolds number, the test results can be converted to the guarantee conditions using the procedure shown in Figures 4 and 5.

Where $\vartheta_{j,te} = \vartheta_{j,g}$, conversion can be carried out as shown in Figure 4.

Documents
Document Sharing Hub
Full document details: BS ISO 5389:2005

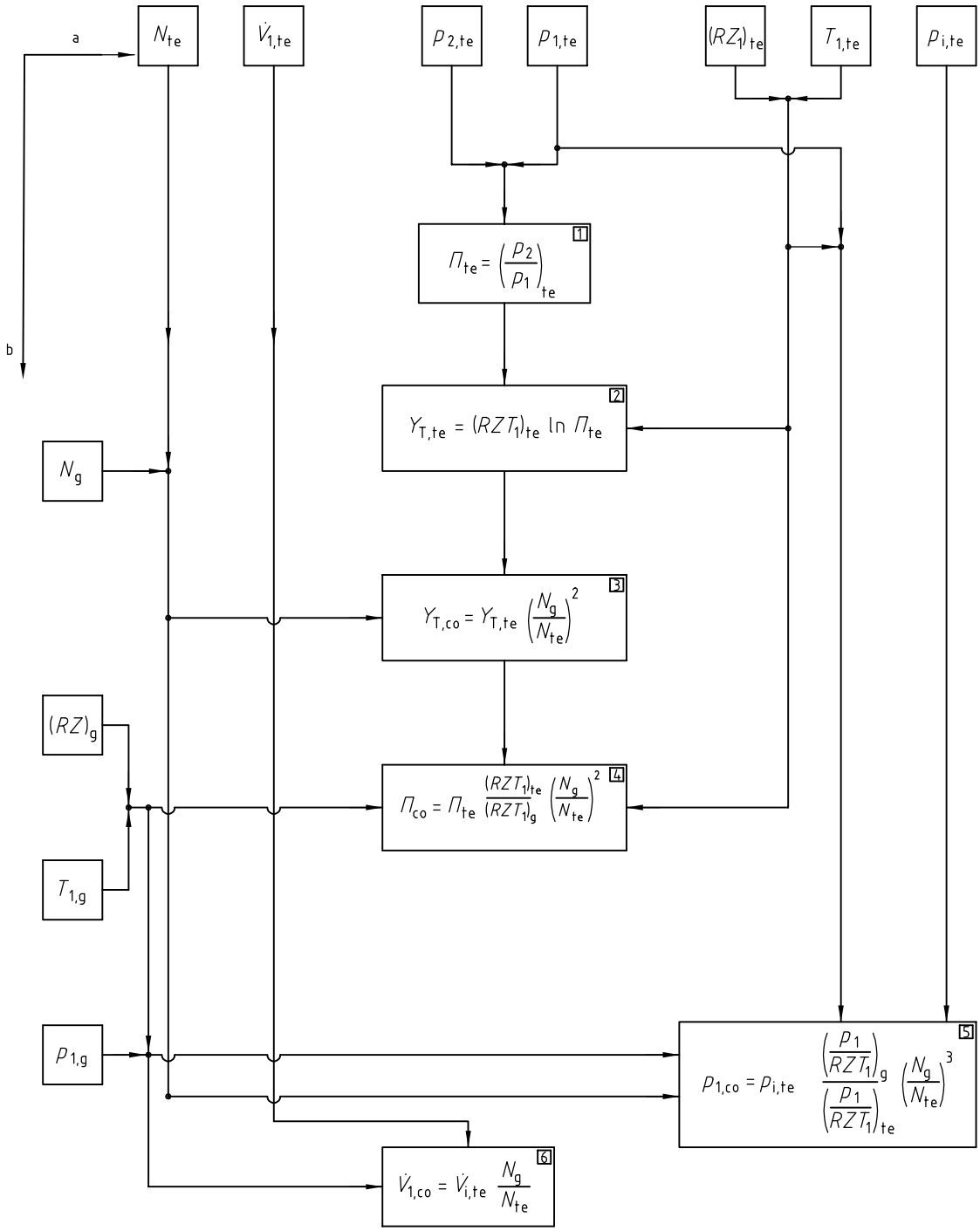

a Test values.

b Guarantee conditions.

Figure 4 — Overall conversion for cooled compressors where $\vartheta_{j,te} = \vartheta_{j,g}$, $n_{te} = n_g$ and with approximately perfect gas behaviour

Where $\vartheta_{j,te} \neq \vartheta_{j,g}$, the test results can be converted in accordance with Figure 5 It is presupposed here only that, where multiple intercooling is installed, the products RZ_1T_1 downstream of the intercoolers have the same ratio to one another in the test as in the guarantee conditions.

The measured gas power of the compressor shall be subdivided into a section A for the uncooled section and a section B for the cooled section. It will, in general, be possible to perform this subdivision during the test.

Documents
Document Sharing Hub
Full document details: BS ISO 5389:2005

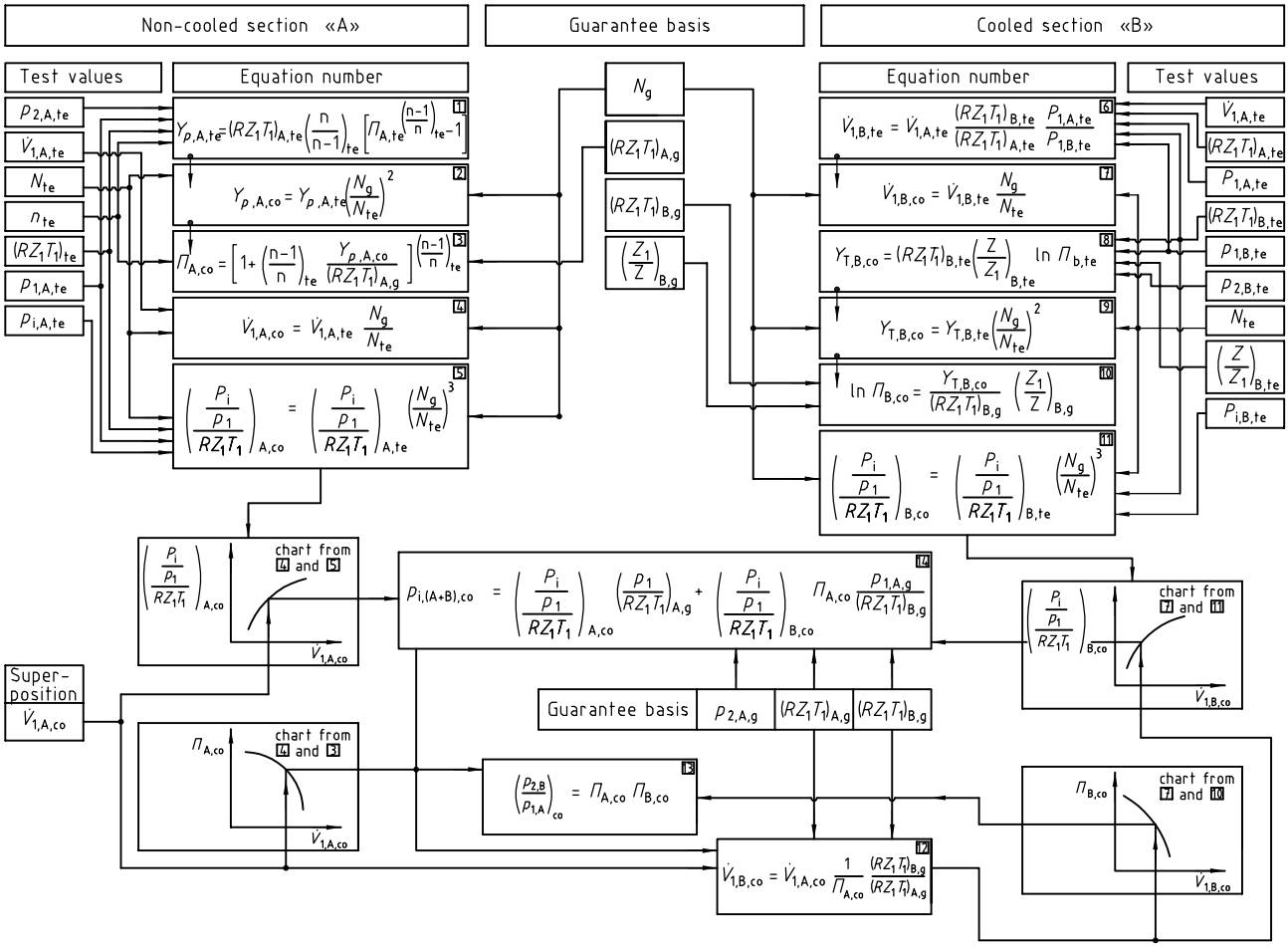

Figure 5 — Conversion for cooled compressors where $\vartheta_{j,\mathrm{te}} \neq \vartheta_{j,\mathrm{g}}$, but $\vartheta_{jB,\mathrm{te}} = \vartheta_{jB,\mathrm{g}}$, $n_{\mathrm{te}} = n_{\mathrm{g}}$ and approximately with perfect gas behaviour

Where this is not possible, the subdivision can be performed proportional to the specific design work of compression.

These power portions shall then be converted to the guarantee conditions using the procedure shown in Figure 5.

7.2.4.2.2 Conversion by means of uncooled sections

Where the conditions for an overall conversion are not met (e.g. greater Reynolds number deviations, different isentropic exponent, intercooler operating conditions diverging from guarantee conditions), the conversion shall be effected by means of superpositioning of the section performance curves converted in accordance with 7.2.4.1.

7.2.4.3 Provision for leakage flows

Allowance shall be made in the conversion for changes in leakage flows where the test conditions in the test diverge significantly from the guarantee conditions.

AVA Documents
Document Sharing Hub

Full document details: BS ISO 5389:2005

7.2.4.4 Conversion of mechanical power loss

Mechanical power loss, P_{mech}, is the sum of all individual mechanical losses. These depend on the respective test and guarantee conditions, and on speed, power consumption, axial thrust, and the viscosity and temperature of the lubricant, in particular.

Individual mechanical losses occur in axial and radial bearings, lubricant pumps, compressor gear boxes, liquid and gas operated shaft seals, mechanical contact seals, etc., in particular.

The losses are normally measured on the basis of oil-temperature rise and/or calculated from design dimensions and the test data.

The sum of the converted individual losses is the mechanical power loss, $P_{\text{mech,co}}$, from which $P_{\text{cou,co}}$ can now be calculated:

$$P_{\text{cou,co}} = P_{\text{i,co}} + P_{\text{mech,co}} \tag{42}$$

The power loss due to bearing friction can be determined for plain bearings.

The influence of speed on the mechanical losses can be estimated by the equation:

$$P_{\text{mech,co}} = P_{\text{mech,te}} \left(\frac{N_{\text{g}}}{N_{\text{te}}} \right)^{b} \tag{43}$$

where b = 1,5 to 2,0

7.2.4.5 Correction of gas power due to radiation

If not directly added to measured gas power according to 5.9, the heat transferred to the ambient air during the test in case of an energy balance is converted to guarantee preconditions by the equation

$$\dot{Q}_{\text{rad,co}} = \dot{Q}_{\text{rad,te}} \cdot \frac{P_{\text{i},\Delta t,\text{co}}}{P_{\text{i},\Delta t,\text{te}}} \tag{44}$$

and added to the gas power, $P_{\text{i},\Delta h,\text{co}}$, measured over mass flow and enthalpy rise and converted to guarantee preconditions

$$P_{\text{i,co}} = P_{\text{i},\Delta t,\text{co}} + \dot{Q}_{\text{rad,co}} \tag{45}$$

The converted discharge temperature $t_{2,\text{co}}$ then can be corrected by

$$t_{2,\text{co}} = t_{1,\text{g}} + \left(t_{2,\text{co},\Delta t} - t_{1,\text{g}} \right) \cdot \frac{P_{\text{i,co}}}{P_{\text{i},\Delta t,\text{co}}} \tag{46}$$

$\dot{Q}_{\text{rad,co}}$ is not the heat transferred to ambient air by radiation at guarantee preconditions.

7.2.5 Supplementary tolerances

Where it has not been possible to meet the inner tolerance limit during the test, a supplementary tolerance for power and specific compression work shall be determined as follows:

Documents
Document Sharing Hub
Full document details: BS ISO 5389:2005

For the pressure ratio, Π, and the polytropic exponents, n_{te}, and n_g, the permissible upper and lower limit values of $X_{N,tol}$ with the parameter $\Delta\phi_{tol}$ shall be calculated according to the flow diagram in Annex A or

$$X_{N,tol}\sqrt{\frac{\psi_{p,te}}{\psi_{p,g}}} \tag{47}$$

at the inner tolerance limit and at the outer tolerance limits shall be taken from the relevant figures and $X_{N,tol}$ shall be calculated with this value.

Figure 6 shows an example of such a diagram, which shall be drafted newly in each case.

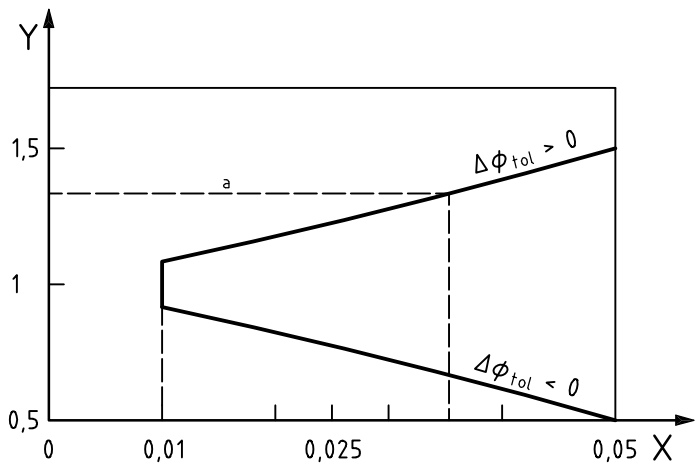

Key

X deviation, $|\Delta\phi|$, of the ratio of the volume flow ratios

Y X_N

a Achievable in the test.

Figure 6 — Procedure to determine the deviation of the ratio, ϕ, of volume flow ratios for determination of supplementary tolerance

This figure supplies the corresponding value for $\Delta\phi$ for the test value X_N.

The supplementary tolerance τ_{dev} can then be calculated:

If	$\lvert\Delta\phi\rvert < 0{,}01$	$\tau_{dev} = 0$
If	$0{,}01 < \lvert\Delta\phi\rvert < 0{,}05$	$\tau_{dev} = 25\ (\lvert\Delta\phi\rvert - 0{,}01)$ in %
If	$\lvert\Delta\phi\rvert > 0{,}05$ (Test class C)	$\tau_{dev} = 1{,}0$ %

7.2.6 Special notes

Where a portion of the gas condensates, e.g. in the intercoolers in the test and/or guarantee case, the condensated amount shall be taken into account in power in accordance with the compression work necessary for it, and in the volume flow. It shall be borne in mind that the amount actually condensated up to stage "j" of the compressor is, in general, smaller than its thermodynamically calculated quantity (separation efficiency < 1). Where it is necessary to convert from a test state at a specified moisture content to a guarantee state of a different moisture content, the separation efficiency of the respective coolers shall be assumed constant in the test and guarantee conditions by way of approximation. The measured amounts of condensated water in the test shall be converted at the ratio of the amounts which would result in each case

AVA Documents
Document Sharing Hub

Full document details: BS ISO 5389:2005

at a separation efficiency of 1. The power for each stage shall be corrected by the amount by which the gas mass flow differs in the test and guarantee conditions due to differing amounts of water condensation. Precise conversion, on the other hand, is possible from a test with moist gas to the guarantee state (dry gas) by adding to the power for each stage the extra energy required for compression of the gas which, in the guarantee case, would remain in place of the fluid condensated out during the test.

Furthermore, during the compression process or in the compression system and its measuring points, chemical reactions which modify gas contents, volumes and temperatures, in particular, can occur.

Where a compressor features inward sidestreams and/or extractions, the volume sidestream flows or extraction flows under test and guarantee conditions shall be harmonized in proportion to the main flow. Here, conversion shall be performed on the basis of the mixture states.

Where the compressor is operated under test and guarantee conditions at differing pressure levels, leakage losses shall be considered.

Where a compressor consists of several casings or where its design makes it possible to remove intercoolers and install measuring lines in their place, the compressor can be subdivided into separate compressor units for test purposes.

The acceptance test does not necessarily furnish proof that the intercoolers fulfil the guarantee conditions with regard to re-cooling temperature, pressure loss, coolant flow, etc.

8 Guarantee comparison

8.1 Object

The guarantee comparison is comprised of the following:

a) verification of the guaranteed absolute and/or related values for power or fluid consumption, and/or for the efficiency of the compressor under guarantee conditions (see 4.3);

b) verification of the guaranteed upper limit of the operating range of the compressor under guarantee conditions and, possibly, also of the lower limit of the operating range and the corresponding efficiencies under guarantee conditions.

8.2 Execution

8.2.1 General

In order to verify fulfilment of the guarantee, the guarantee values are compared with the test results converted to the guarantee conditions. Inclusion of total uncertainty τ_{tot} (6.4.4.1) in the guarantee comparison is dealt with below.

The guarantee comparison is carried out in most cases by means of graphic presentation. The inlet volume flow, $\dot{V}$, is selected as the abscissa X. The equations for the relative uncertainty of measured results shall be derived anew for other plotted features. The variable to be verified, e.g., efficiency η_{cou}, is plotted as the ordinate Y. The methods for the guarantee comparison described below apply, provided no contractual agreements to the contrary have been made.

Documents
Document Sharing Hub
Full document details: BS ISO 5389:2005

8.2.2 Comparison of single test points with single guarantee points

Power at the coupling $P_{\text{cou, co}}$ converted to guarantee conditions in accordance with 6.3 is converted to the values taken as a basis for the guarantee for inlet volume flow, $\dot{V}_{1,\text{g}}$, and pressure ratio $\Pi_{\text{g}}[y_{\text{g}} = f(\Pi_{\text{g}})]$; see Figure 7 assuming constant gas efficiency:

$$P_{\text{cou,cog}} = P_{\text{i,co}} \cdot \frac{\dot{V}_{1,\text{g}}}{\dot{V}_{1,\text{co}}} \cdot \frac{y_{\text{g}}}{y_{\text{co}}} + P_{\text{mech,cog}} \tag{48}$$

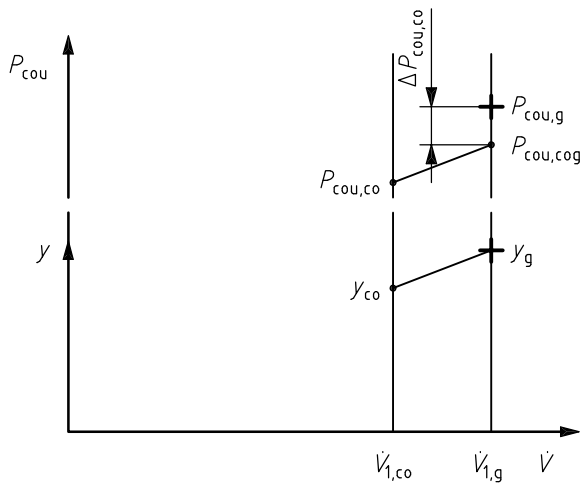

Figure 7 — Guarantee comparison for single test points

The applicability of this procedure is restricted by the permissibility of the assumption of a constant efficiency.

A guarantee comparison with respect to the performance curve shape is not possible. The measuring uncertainty for $P_{\text{cou,co}}$ shall, in this case, be calculated using the equation for related power at the coupling in 6.4.4.2.4

8.2.3 Comparison of measured performance curves with guarantee points

8.2.3.1 Compressors with fixed geometry and speed

Where a manufacturing tolerance is agreed for the inlet volume flow and/or discharge pressure (pressure ratio) for a compressor due to the lack of facilities for control to vary the performance curve, the guarantee comparison for power shall be carried out in accordance with Equation (48). The following point of the performance curve is taken as a basis for this, according to the type of manufacturing tolerance agreed:

— manufacturing tolerance on inlet volume flow;

— performance curve point at guaranteed discharge pressure (pressure ratio); see Figure 8;

— manufacturing tolerance on discharge pressure (pressure ratio): performance curve point at guaranteed inlet volume flow; see Figure 9;

— manufacturing tolerance on inlet volume flow and discharge pressure (pressure ratio): intersection of the performance curve with the straight line from the guarantee point to the minimum or maximum point of the tolerance field; see Figure 10.

Documents
Document Sharing Hub

Full document details: BS ISO 5389:2005

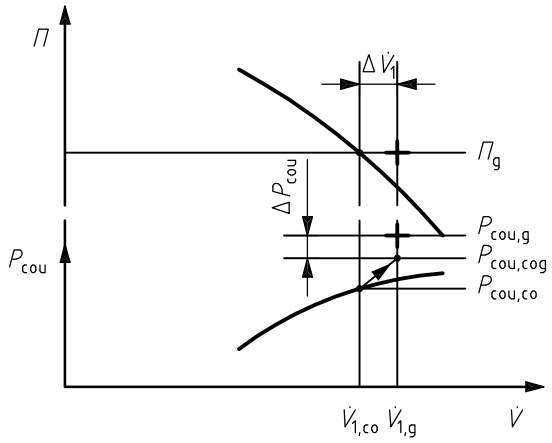

Figure 8 — Guarantee comparison for a compressor at guaranteed pressure ratio

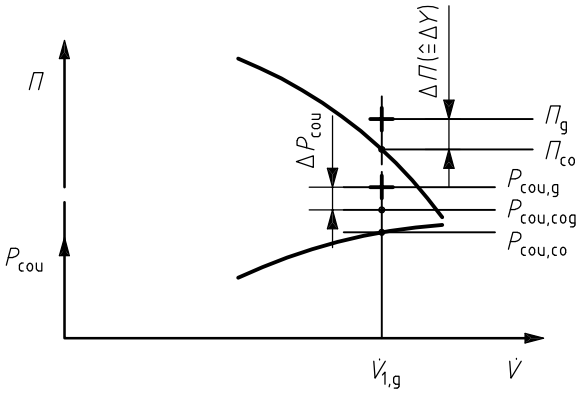

Figure 9 — Guarantee comparison for a compressor with guaranteed inlet volume flow

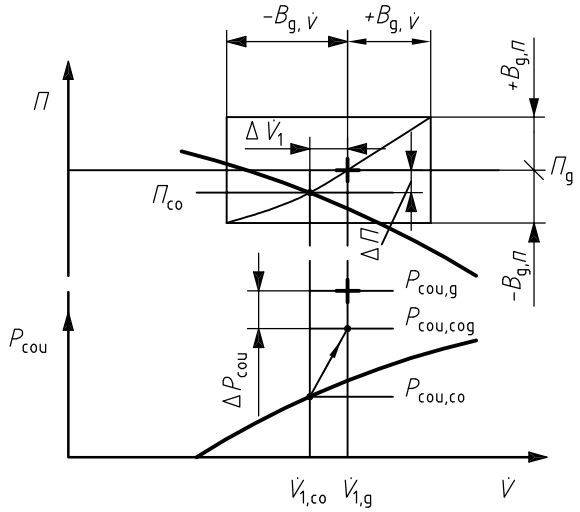

Figure 10 — Guarantee comparison for adjustable pressure ratio and inlet volume flow
(e.g. where manufacturing tolerance applies to pressure ratio and inlet volume flow)

Documents
Document Sharing Hub
Full document details: BS ISO 5389:2005

8.2.3.2 Compressors with variable geometry or variable speed

Here, the guarantee comparison can be carried out directly in accordance with Figure 11 using a performance curve through the guarantee point $\left(\dot{V}_{1,g}, \Pi_g\right)$.

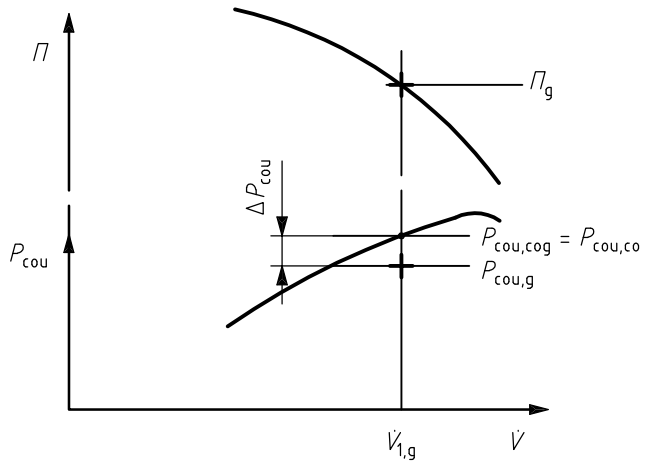

Figure 11 — Guarantee comparison for a compressor with variable geometry or variable speed

This performance curve can be operated directly, or may be produced from adjacent performance curves in conjunction with the similarity conditions or by means of interpolation.

8.2.3.3 Special case: inlet throttle control

Where the converted performance curve for the inlet volume flow of the guarantee point exhibits a greater pressure ratio than the guaranteed pressure ratio and inlet throttling is possible at the place where the compressor is installed, the guarantee comparison may be carried out making allowance for inlet throttle losses. Under perfect gas behaviour and without intercooling (Figure 12):

$$P_{\text{cou,cog}} = (P_{\text{cou,co}} - P_{\text{mech,co}}) \frac{p_{2,g}}{p_{2,co}} + P_{\text{mech,co}} \tag{49}$$

Where p_2/p_1 is a constant

$$\frac{\dot{V}_{1,g}}{\dot{V}_{1,co}} = \frac{p_{2,g}}{p_{2,co}} \tag{50}$$

The throttled inlet pressure is

$$p_{1,\text{cog}} = \frac{p_{2,g}}{p_{2,co} / p_{1,g}} \tag{51}$$

This suction pressure shall be in the tolerable operating range.

Documents
Document Sharing Hub
Full document details: BS ISO 5389:2005