BS ISO 5636-3:2013

BSI Standards Publication

Paper and board — Determination of air permeance (medium range)

Part 3: Bendtsen method

bsi.

...making excellence a habit.™

Document Sharing Hub

National foreword

This British Standard is the UK implementation of ISO 5636-3:2013. It supersedes BS 6538-2:1992 which is withdrawn.

The UK participation in its preparation was entrusted to Technical Committee PAI/11, Methods of test for paper, board and pulps.

A list of organizations represented on this committee can be obtained on request to its secretary.

This publication does not purport to include all the necessary provisions of a contract. Users are responsible for its correct application.

© The British Standards Institution 2013. Published by BSI Standards Limited 2013

ISBN 978 0 580 69826 2

ICS 85.060

Compliance with a British Standard cannot confer immunity from legal obligations.

This British Standard was published under the authority of the Standards Policy and Strategy Committee on 31 October 2013.

Amendments issued since publication

Date	Text affected

Documents
Document Sharing Hub

Full document details: BS ISO 5636-3:2013

INTERNATIONAL STANDARD

ISO 5636-3

Third edition
2013-11-01

Paper and board — Determination of air permeance (medium range) —

Part 3: Bendtsen method

Papier et carton — Détermination de la perméabilité à l'air (plage de valeurs moyennes) —

Partie 3: Méthode Bendtsen

Reference number
ISO 5636-3:2013(E)

Documents
Document Sharing Hub

© ISO 2013

Full document details: BS ISO 5636-3:2013

COPYRIGHT PROTECTED DOCUMENT

© ISO 2013

All rights reserved. Unless otherwise specified, no part of this publication may be reproduced or utilized otherwise in any form or by any means, electronic or mechanical, including photocopying, or posting on the internet or an intranet, without prior written permission. Permission can be requested from either ISO at the address below or ISO's member body in the country of the requester.

ISO copyright office
Case postale 56 • CH-1211 Geneva 20
Tel. + 41 22 749 01 11
Fax + 41 22 749 09 47
E-mail copyright@iso.org
Web www.iso.org

Published in Switzerland

© ISO 2013 – All rights reserved

Documents
Document Sharing Hub

Full document details: BS ISO 5636-3:2013

Contents

Page

Foreword ..... **iv**
1 Scope **1**
2 Normative references **1**
3 Terms and definitions **1**
4 Principle **1**
5 Apparatus **2**
6 Sampling **3**
7 Conditioning **3**
8 Preparation of test pieces **3**
9 Calibration **3**
9.1 Variable-area flow-measuring device 3
9.2 Electronic flow-measuring device 3
10 Procedure **3**
11 Calculation and expression of results **4**
11.1 Calculation of air permeance 4
11.2 Reporting the results 4
11.3 Standard deviation and coefficient of variation 4
12 Test report **4**
Annex A (normative) **Calibration of capillary tubes and variable-area flowmeters** **6**
Annex B (normative) **Care and maintenance of variable-area flowmeter-type Bendtsen testers** **10**
Annex C (informative) **Precision** **12**
Bibliography **14**

© ISO 2013 – All rights reserved

Documents
Document Sharing Hub
Full document details: BS ISO 5636-3:2013

Foreword

ISO (the International Organization for Standardization) is a worldwide federation of national standards bodies (ISO member bodies). The work of preparing International Standards is normally carried out through ISO technical committees. Each member body interested in a subject for which a technical committee has been established has the right to be represented on that committee. International organizations, governmental and non-governmental, in liaison with ISO, also take part in the work. ISO collaborates closely with the International Electrotechnical Commission (IEC) on all matters of electrotechnical standardization.

The procedures used to develop this document and those intended for its further maintenance are described in the ISO/IEC Directives, Part 1. In particular the different approval criteria needed for the different types of ISO documents should be noted. This document was drafted in accordance with the editorial rules of the ISO/IEC Directives, Part 2 (see www.iso.org/directives).

Attention is drawn to the possibility that some of the elements of this document may be the subject of patent rights. ISO shall not be held responsible for identifying any or all such patent rights. Details of any patent rights identified during the development of the document will be in the Introduction and/or on the ISO list of patent declarations received (see www.iso.org/patents).

Any trade name used in this document is information given for the convenience of users and does not constitute an endorsement.

For an explanation on the meaning of ISO specific terms and expressions related to conformity assessment, as well as information about ISO's adherence to the WTO principles in the Technical Barriers to Trade (TBT) see the following URL: Foreword - Supplementary information

The committee responsible for this document is ISO/TC 6, *Paper, board and pulps*, Subcommittee SC 2, *Test methods and quality specifications for paper and board*.

This third edition cancels and replaces the second edition (ISO 5636-3:1992), which has been technically revised. In this third edition mainly editorial changes have been made and also precision data has been added as informative Annex C.

ISO 5636 consists of the following parts, under the general title *Paper and board — Determination of air permeance (medium range)*:

— *Part 3: Bendtsen method*

— *Part 4: Sheffield method*

— *Part 5: Gurley method*

— *Part 6: Oken method*

NOTE 1 *Part 1: General method* will be withdrawn after the third editions of Parts 3, 4 and 5 have been published, as it was considered redundant.

NOTE 2 *Part 2: Schopper method* was withdrawn in 2006 as it was considered obsolete.

NOTE 3 *Part 6: Oken method* is being prepared.

© ISO 2013 – All rights reserved
Documents
Document Sharing Hub
Full document details: BS ISO 5636-3:2013

INTERNATIONAL STANDARD ISO 5636-3:2013(E)

Paper and board — Determination of air permeance (medium range) —

Part 3: Bendtsen method

1 Scope

This part of ISO 5636 specifies the Bendtsen method for determining the air permeance of paper and board using the Bendtsen apparatus.

It is applicable to papers and boards which have air permeances between 0,35 µm/(Pa·s) and 15 µm/(Pa·s) when tested with the Bendtsen apparatus.

It is unsuitable for rough-surfaced materials which cannot be securely clamped to avoid leakage.

2 Normative references

The following documents, in whole or in part, are normatively referenced in this document and are indispensable for its application. For dated references, only the edition cited applies. For undated references, the latest edition of the referenced document (including any amendments) applies.

ISO 186, *Paper and board — Sampling to determine average quality*

ISO 187, *Paper, board and pulps — Standard atmosphere for conditioning and testing and procedure for monitoring the atmosphere and conditioning of samples*

3 Terms and definitions

For the purposes of this document, the following terms and definitions apply.

3.1
air permeance
mean air flow rate through unit area under unit pressure difference in unit time, under specified conditions

Note 1 to entry: Air permeance is expressed in micrometres per pascal second [1 ml/(m^2·Pa·s) = 1 µm/(Pa·s)].

Note 2 to entry: This property is called air permeance, and not air permeability, because it is reported as a sheet property and is not standardized with respect to thickness to give a material property per unit thickness.

4 Principle

A test piece is clamped between a circular gasket and an annular flat surface of known dimensions. The absolute air pressure on one side of the test area of the test piece is equivalent to atmospheric pressure and the difference in pressure between the two sides of the test piece is maintained at a small, substantially constant, value during the test. Determination of the flow of air through the test area in a specified time.

© ISO 2013 – All rights reserved

Documents
Document Sharing Hub
Full document details: BS ISO 5636-3:2013

5 Apparatus

Bendtsen apparatus, see Figure 1, consisting of a compressor (see 5.1) and a pressure stabilizing reservoir (see 5.2) to supply air, a flowmeter (see 5.4) with a pressure controlling device (see 5.3) and a measuring head (see 5.5).

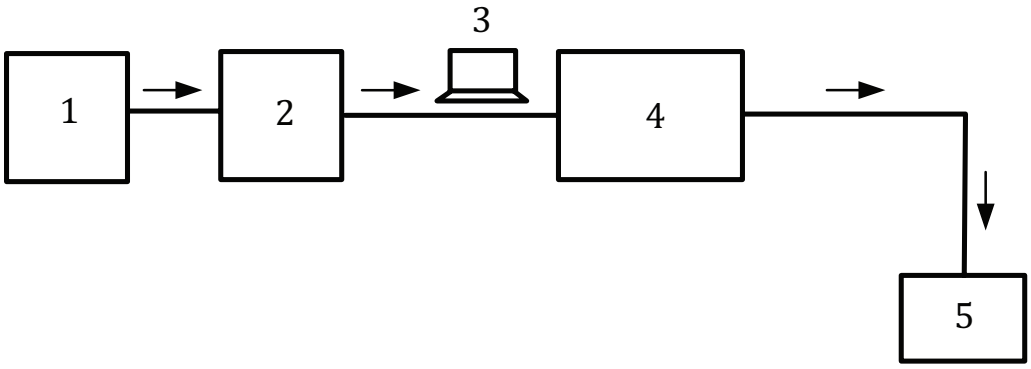

Key

1 compressor
2 pressure stabilizing reservoir
3 pressure controlling device
4 flowmeter
5 sample clamping device and measuring head

Figure 1 — Flow diagram of the Bendtsen apparatus

5.1 Compressor, generating air at a pressure of about 127 kPa. If necessary, filters shall be provided to ensure that the air is clean and free of oil.

5.2 Pressure stabilizing reservoir, having a vessel volume of about 10 litres and installed between the compressor and the pressure controlling device, or some other means of providing a stable air flow.

NOTE The pressure stabilizing reservoir is not normally supplied with the apparatus. Its provision, or some other means of providing a stable air flow, is the responsibility of the user.

5.3 Pressure controlling device, to control the air pressure at the inlet of the flowmeter. This shall comprise a manostat weight, a pressure regulator or some other means of creating a steady nominal air pressure of (1,47 ± 0,02) kPa measured at the manostat.

NOTE Most Bendtsen apparatus are provided with three interchangeable manostat weights but only the 1,47 kPa manostat meets the requirement of this part of ISO 5636.

5.4 Variable-area flowmeters, to measure the flow rate in the following ranges: 5 ml/min to 150 ml/min, 50 ml/min to 500 ml/min and 300 ml/min to 3 000 ml/min. The resolution of these variable-area flowmeters shall be 2 ml/min, 5 ml/min and 20 ml/min respectively. The variable-area flowmeter may be replaced by an electronic air flowmeter having a measuring range suitable for the material measured that allows the air flow to be determined with an error of less than ± 5 ml/min or ± 5 % whichever is greater.

On some apparatus the available measuring ranges are 0 to 300 ml/min and 300 ml/min to 3 000 ml/min. The resolution of these variable area flowmeters shall be 1 % of the maximum reading scale.

5.5 Measuring head, consisting of a device in which the test piece is clamped between an annular flat surface and a circular rubber gasket. The annular ring and the gasket shall be of such dimensions that the

© ISO 2013 – All rights reserved
Documents
Document Sharing Hub
Full document details: BS ISO 5636-3:2013