BS ISO 5685:2022

BSI Standards Publication

# Road vehicles — Testing the abrasion resistance of automotive glazing with the windscreen wiper test

Documents
Document Sharing Hub

Full document details: BS ISO 5685:2022

# National foreword

This British Standard is the UK implementation of ISO 5685:2022.

The UK participation in its preparation was entrusted to Technical Committee AUE/1, Vehicle Lighting & Visibility.

A list of organizations represented on this committee can be obtained on request to its committee manager.

**Contractual and legal considerations**

This publication has been prepared in good faith, however no representation, warranty, assurance or undertaking (express or implied) is or will be made, and no responsibility or liability is or will be accepted by BSI in relation to the adequacy, accuracy, completeness or reasonableness of this publication. All and any such responsibility and liability is expressly disclaimed to the full extent permitted by the law.

This publication is provided as is, and is to be used at the recipient's own risk.

The recipient is advised to consider seeking professional guidance with respect to its use of this publication.

This publication is not intended to constitute a contract. Users are responsible for its correct application.

© The British Standards Institution 2022
Published by BSI Standards Limited 2022

ISBN 978 0 539 15992 9

ICS 43.040.65

**Compliance with a British Standard cannot confer immunity from legal obligations.**

This British Standard was published under the authority of the Standards Policy and Strategy Committee on 31 July 2022.

**Amendments/corrigenda issued since publication**

| Date | Text affected |
|---|---|

Documents
Document Sharing Hub

Full document details: BS ISO 5685:2022

INTERNATIONAL STANDARD

# ISO 5685

First edition
2022-05

# Road vehicles — Testing the abrasion resistance of automotive glazing with the windscreen wiper test

*Véhicules routiers — Contrôle de la résistance à l'abrasion du vitrage automobile par un test essuie-glace*

Reference number
ISO 5685:2022(E)

Documents
Document Sharing Hub
© ISO 2022

Full document details: BS ISO 5685:2022

**COPYRIGHT PROTECTED DOCUMENT**

© ISO 2022

All rights reserved. Unless otherwise specified, or required in the context of its implementation, no part of this publication may be reproduced or utilized otherwise in any form or by any means, electronic or mechanical, including photocopying, or posting on the internet or an intranet, without prior written permission. Permission can be requested from either ISO at the address below or ISO's member body in the country of the requester.

ISO copyright office
CP 401 • Ch. de Blandonnet 8
CH-1214 Vernier, Geneva
Phone: +41 22 749 01 11
Email: copyright@iso.org
Website: www.iso.org

Published in Switzerland



© ISO 2022 – All rights reserved

Documents
Document Sharing Hub

Full document details: BS ISO 5685:2022

# Contents

Page

**Foreword** ... **v**
**Introduction** ... **vi**
**1 Scope** ... **1**
**2 Normative references** ... **1**
**3 Terms and definitions** ... **1**
**4 Principle** ... **2**
**5 Test Conditions** ... **2**
**6 Apparatus** ... **2**
6.1 Abrasion testing device ... 2
6.2 Components to guide the wiper rubber ... 4
6.3 Specimen boxes with spacer plates ... 5
6.4 Haze measurement device ... 6
6.4.1 General ... 6
6.4.2 Haze measurements with a haze meter ... 7
**7 Preparation of the abrasion testing device** ... **9**
7.1 Settings of the abrasion testing device ... 9
7.2 Setting up the abrasion testing device ... 9
7.3 Inserting the wiper rubber into the wiper rubber holder ... 10
7.4 Load weight of the wiper rubber ... 11
7.5 Movement of the wiper rubber on the test piece ... 12
7.6 Checking the wiper rubber guidance ... 13
**8 Preparation of the test pieces** ... **13**
8.1 General ... 13
8.2 Cleaning the test pieces ... 14
8.3 Conditioning of the test pieces ... 14
8.4 Measurement of the initial haze of the test pieces ... 14
8.5 Insertion of the test pieces into the bottom opening of the specimen boxes ... 14
**9 Completion of the abrasion testing device** ... **16**
9.1 Positioning of the specimen boxes in the abrasion testing device ... 16
9.2 Mounting of the wiper bridge with wiper rubber holders and wiper rubbers on the abrasion testing device ... 16
9.3 Filling the standardized test dust suspension into the specimen boxes ... 16
**10 Carrying out the abrasion process** ... **17**
10.1 Carrying out the first 10 000 wiping cycles ... 17
10.2 Switching the positions of the specimen boxes after 10 000 wiping cycles ... 17
10.2.1 General ... 17
10.2.2 Switching the positions in the case of parallel orientation of the specimen boxes ... 17
10.2.3 Switching the positions in the case of series orientation of the specimen boxes ... 17
10.3 Remounting the wiper bridge ... 18
10.4 Carrying out the second 10 000 wiping cycles ... 18
**11 Cleaning and visual assessment of the test pieces** ... **18**
**12 Measurement of final haze** ... **19**
**13 Evaluation and presentation of the results** ... **19**
**14 Test report** ... **19**
**Annex A** (informative) **Sample templates** ... **20**

Documents
Document Sharing Hub

© ISO 2022 – All rights reserved


Full document details: BS ISO 5685:2022

**Annex B** (informative) **Statistical results of the round robin test to determine the reproducibility of the windscreen wiper test** ..... **28**

**Bibliography** ..... **29**



© ISO 2022 – All rights reserved

Documents
Document Sharing Hub

Full document details: BS ISO 5685:2022

# Foreword

ISO (the International Organization for Standardization) is a worldwide federation of national standards bodies (ISO member bodies). The work of preparing International Standards is normally carried out through ISO technical committees. Each member body interested in a subject for which a technical committee has been established has the right to be represented on that committee. International organizations, governmental and non-governmental, in liaison with ISO, also take part in the work. ISO collaborates closely with the International Electrotechnical Commission (IEC) on all matters of electrotechnical standardization.

The procedures used to develop this document and those intended for its further maintenance are described in the ISO/IEC Directives, Part 1. In particular, the different approval criteria needed for the different types of ISO documents should be noted. This document was drafted in accordance with the editorial rules of the ISO/IEC Directives, Part 2 (see www.iso.org/directives).

Attention is drawn to the possibility that some of the elements of this document may be the subject of patent rights. ISO shall not be held responsible for identifying any or all such patent rights. Details of any patent rights identified during the development of the document will be in the Introduction and/or on the ISO list of patent declarations received (see www.iso.org/patents).

Any trade name used in this document is information given for the convenience of users and does not constitute an endorsement.

For an explanation of the voluntary nature of standards, the meaning of ISO specific terms and expressions related to conformity assessment, as well as information about ISO's adherence to the World Trade Organization (WTO) principles in the Technical Barriers to Trade (TBT), see www.iso.org/iso/foreword.html.

This document was prepared by Technical Committee ISO/TC 22, *Road vehicles*, Subcommittee SC 35, *Lighting and visibility*.

Any feedback or questions on this document should be directed to the user's national standards body. A complete listing of these bodies can be found at www.iso.org/members.html.

© ISO 2022 – All rights reserved


Documents
Document Sharing Hub
Full document details: BS ISO 5685:2022

# Introduction

The surfaces of vehicle glazing are usually subject to abrasive wear in service. This is caused by various mechanisms such as the impact of small particles (e.g. sand), the use of car wash brushes, windscreen wipers or ice scrapers, or the rolling up and down of panes of glazing with deposited dirt on them in the case of roll-up windows.

Various test methods are required in order to be able to evaluate to a sufficient extent the abrasion resistance of glazing surfaces with regard to these different mechanisms that occur in service. In addition to the abrasive wheel test [taber test (see ISO 3537, ISO 15082 and UNECE R43)], the sand drop test (see UNECE R43) and the more recent car wash test (see ISO 15082 and UNECE R43) that have been established in abrasion testing of vehicle glazing for many years, a method is to be standardized that simulates the abrasion that results from the use of windscreen wipers. This is significant for the evaluation of windscreens in particular, but also for other panes of glazing.


© ISO 2022 – All rights reserved
Documents
Document Sharing Hub
Full document details: BS ISO 5685:2022

# Road vehicles — Testing the abrasion resistance of automotive glazing with the windscreen wiper test

## 1 Scope

This document specifies a method for determining the resistance of a glazing surface to abrasion by a wiper rubber under the influence of a standardized test dust suspension.

## 2 Normative references

The following documents are referred to in the text in such a way that some or all of their content constitutes requirements of this document. For dated references, only the edition cited applies. For undated references, the latest edition of the referenced document (including any amendments) applies.

ISO 3536, *Road vehicles — Safety glazing materials — Vocabulary*

ISO 12103-1:2016, *Road vehicles — Test contaminants for filter evaluation — Part 1: Arizona test dust*

## 3 Terms and definitions

For the purposes of this document, the terms and definitions given in ISO 3536 and the following apply.

ISO and IEC maintain terminology databases for use in standardization at the following addresses:

— ISO Online browsing platform: available at https://www.iso.org/obp

— IEC Electropedia: available at https://www.electropedia.org/

**3.1**
**individual test**
single experiment in which a test piece is subjected to 20 000 *wiping cycles* (3.3)

Note 1 to entry: Two test pieces can always be tested at the same time in a test procedure.

**3.2**
**complete test**
consists of three *individual tests* (3.1), i.e. a test on three test pieces

Note 1 to entry: One of the three individual tests may be repeated if areas with differing abrasion occur [see also *chatter marks* (3.7)]. Every valid individual test shall fulfil the requirements in order to fulfil the requirements for a set of test pieces.

**3.3**
**wiping cycle**
single forward and backward movement of the abrasion testing device carriage

**3.4**
**stroke length**
travel distance of the carriage or bridge

Note 1 to entry: The stroke length corresponds to half a *wiping cycle* (3.3).

**3.5**
**wiper track length**
travel distance of the wiper rubber lip

© ISO 2022 – All rights reserved

Documents
Document Sharing Hub
Full document details: BS ISO 5685:2022

**3.6**
**wiper rubber holder**
mounting device for the wiper rubber

**3.7**
**chatter mark**
area with differing abrasion that generally has wave patterns and is caused by non-uniform, jerking motion of the wiper rubber lip

## 4 Principle

A wiper rubber is moved forward and backward across a glazing surface using an abrasion testing device (see 6.1). A standardized aqueous test dust suspension is used as the abrasive medium.

The surface wear is evaluated by measuring the increase in haze.

## 5 Test Conditions

Unless otherwise specified, the tests are to be carried out under the following conditions:

— ambient temperature: (20 ± 5) °C;

— atmospheric pressure: 86 kPa to 106 kPa;

— relative humidity: (60 ± 20) %.

## 6 Apparatus

### 6.1 Abrasion testing device

The apparatus is presented in Figure 1 a) to Figure 1 c) and includes the following individual components as a minimum:

— an abrasion testing device with a moving carriage: the moving carriage shall be set for a forward and backward motion of (37 ± 2) cycles per minute and a stroke length (half a wiping cycle) of (130 ± 5) mm;

— a wiper bridge that is mounted on the moving carriage. Self-supporting arms that the wiper rubber holders can be mounted on are attached to the wiper bridge;

  The height of the wiper bridge is to be selected in such a way that the self-supporting arms are at an angle of (45 ± 5)° in the final test apparatus (see 9.1).

— two wiper rubber holders that are suitable for inserting two commercially available wiper rubbers and that can be set in such a way that the test pieces can be subjected to a load of (15 ± 0,5) g per cm of wiper rubber length (see 7.4);

— two specimen boxes (see 6.3) that the test pieces are placed in and that are filled with the standardized aqueous test dust suspension (see 9.3);

— various spacer plates in the dimensions of the test pieces, but with different thicknesses, that are used for compensation of different test piece thicknesses;

It is necessary that the bottom of the specimen box and the test piece surface to be tested are at the same height.


© ISO 2022 – All rights reserved
Documents
Document Sharing Hub
Full document details: BS ISO 5685:2022

It is to be ensured that the underside of the test piece placed on the spacer plates is not scratched, e.g. by adding a soft film with a maximum thickness of 100 µm[1)] to the surface of the spacer plates.

NOTE 1 The spacer plates can be made from the specimen box material, for example.

— five inlay plates to clamp the specimen boxes;

NOTE 2 One of the inlay plates [No. 13 in Figure 1 b) and Figure 1 c)] can be used as a clamp on one of the sides of the specimen box that is perpendicular to the direction of movement in order to increase the clamping effect on the specimen box.

— a stainless steel basin;

— a wiping cycle counter.

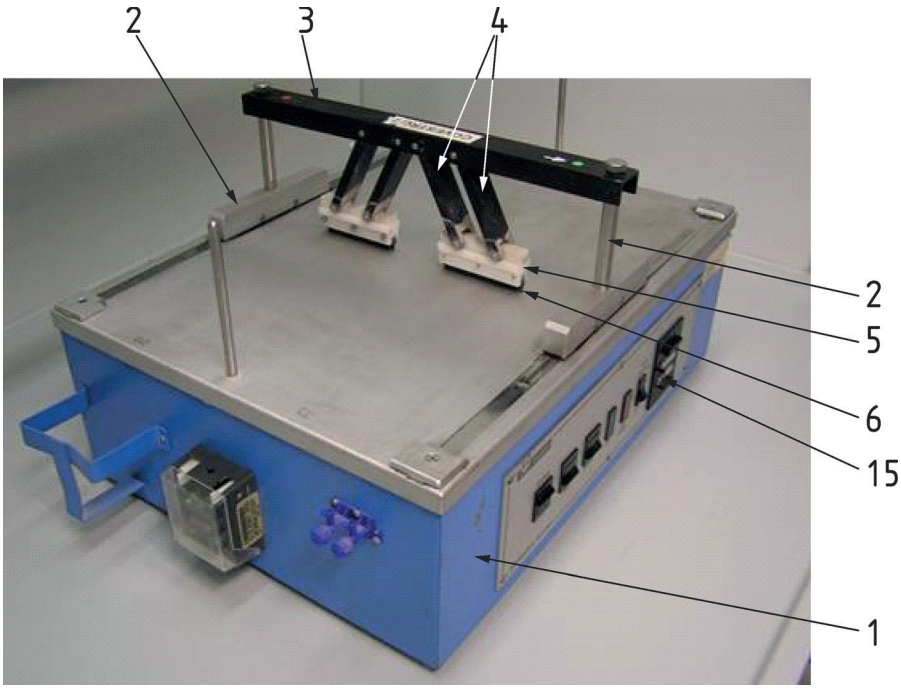


**a) Example of an abrasion testing device with a moving carriage, together with components to guide the wiper rubber**

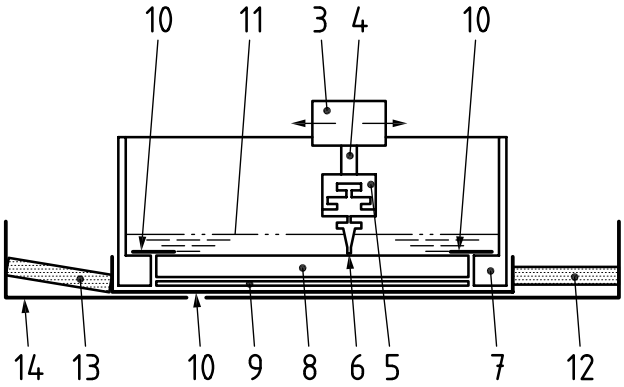


**b) Cross-sectional view of the abrasion testing device, with added components to hold the test pieces and the standardized test dust suspension**

1) The spacer plates can be covered in a manner largely free of creases using so-called masking films, for example, which are normally used to protect hard plastic-glazing materials during storage and transport.

© ISO 2022 – All rights reserved

AVA Documents Document Sharing Hub
Full document details: BS ISO 5685:2022

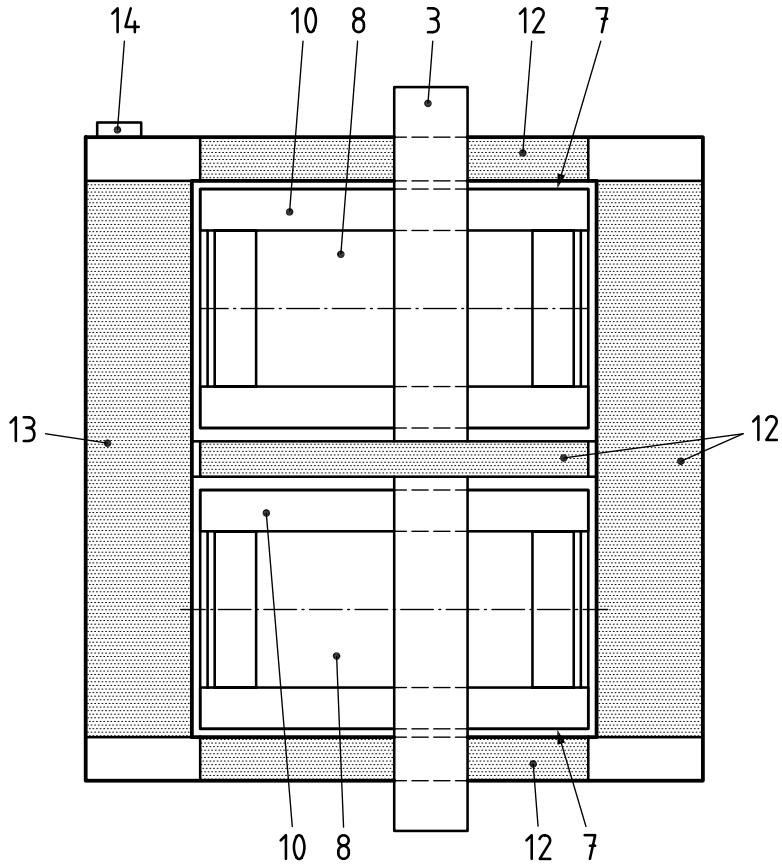


**c) Top view of the abrasion testing device**

**Key**

1 abrasion testing device
2 moving carriage
3 wiper bridge
4 self-supporting arms
5 wiper rubber holder
6 wiper rubbers
7 specimen boxes
8 test piece
9 spacer plates
10 adhesive tape
11 standardized aqueous test dust suspension
12 inlay plates
13 clamp plate
14 stainless steel basin
15 wiping cycle counter

**Figure 1 — Abrasion testing device**

## 6.2 Components to guide the wiper rubber

Wiper rubber holders[2)] and wiper rubbers[3)] can be added to a commercially available abrasion testing device (e.g. a washing and scrubbing resistance tester) to create an abrasion testing device for the wiper test.

2) Suitable abrasion testing devices and wiper holders can be purchased from BYK Gardner, Geretsried, Germany. This information is given for the convenience of users of this document and does not constitute an endorsement by ISO of this product.

3) Suitable wiper rubbers can be purchased from Bosch, Bühl, Germany (CR wiper rubber, “H Stoff P32”, Item No. 3.391.018.399). This information is given for the convenience of users of this document and does not constitute an endorsement by ISO of this product.


© ISO 2022 – All rights reserved
Documents
Document Sharing Hub
Full document details: BS ISO 5685:2022