BS ISO 5686-2:2024

BSI Standards Publication

Polygonal turret interface with flat contact surface

Part 2: Receivers of type F, H, A and X for shanks of type F, H and A

Documents
Document Sharing Hub

Full document details: BS ISO 5686-2:2024

National foreword

This British Standard is the UK implementation of ISO 5686-2:2024.

The UK participation in its preparation was entrusted to Technical Committee W/-, Consumer Products and Services Sector Policy and Strategy Committee.

A list of organizations represented on this committee can be obtained on request to its committee manager.

Contractual and legal considerations

This publication has been prepared in good faith, however no representation, warranty, assurance or undertaking (express or implied) is or will be made, and no responsibility or liability is or will be accepted by BSI in relation to the adequacy, accuracy, completeness or reasonableness of this publication. All and any such responsibility and liability is expressly disclaimed to the full extent permitted by the law.

This publication is provided as is, and is to be used at the recipient's own risk.

The recipient is advised to consider seeking professional guidance with respect to its use of this publication.

This publication is not intended to constitute a contract. Users are responsible for its correct application.

© The British Standards Institution 2024
Published by BSI Standards Limited 2024

ISBN 978 0 539 18598 0

ICS 25.060.20

Compliance with a British Standard cannot confer immunity from legal obligations.

This British Standard was published under the authority of the Standards Policy and Strategy Committee on 31 October 2024.

Amendments/corrigenda issued since publication

Date	Text affected

Documents
Document Sharing Hub

Full document details: BS ISO 5686-2:2024

International Standard

ISO 5686-2

First edition
2024-10

Polygonal turret interface with flat contact surface —

Part 2: Receivers of type F, H, A and X for shanks of type F, H and A

Interfaces de tourelle polygonales avec surface de contact plane —

Partie 2: Récepteurs d'outil de type F, H, A et X pour les queues d'outil de type F, H et A

Reference number
ISO 5686-2:2024(en)

© ISO 2024

Documents
Document Sharing Hub

Full document details: BS ISO 5686-2:2024

COPYRIGHT PROTECTED DOCUMENT

© ISO 2024

All rights reserved. Unless otherwise specified, or required in the context of its implementation, no part of this publication may be reproduced or utilized otherwise in any form or by any means, electronic or mechanical, including photocopying, or posting on the internet or an intranet, without prior written permission. Permission can be requested from either ISO at the address below or ISO's member body in the country of the requester.

ISO copyright office
CP 401 • Ch. de Blandonnet 8
CH-1214 Vernier, Geneva
Phone: +41 22 749 01 11
Email: copyright@iso.org
Website: www.iso.org

Published in Switzerland

Documents
Document Sharing Hub
Full document details: BS ISO 5686-2:2024

Contents

Page

Foreword ... **iv**

1 Scope ... **1**

2 Normative references ... **1**

3 Terms and definitions ... **1**

4 Polygonal taper receivers, types and dimensions ... **2**
- 4.1 General ... 2
- 4.2 Polygonal taper receiver, Type F ... 3
- 4.3 Polygonal taper receiver, Type H ... 6
- 4.4 Polygonal taper receiver, Type A ... 7
- 4.5 Polygonal taper receiver, Type X ... 8
- 4.6 Dimensions ... 8

5 Design ... **9**
- 5.1 Fastening of the PTI tool holders ... 9
- 5.2 Clamping forces ... 9
- 5.3 Material and heat treatment ... 9

6 Designation ... **10**

Annex A (informative) **Clamping forces for PTI receivers of types F, H, A and X** ... **11**

Annex B (informative) **Measuring planes for contour determination of the polygon** ... **12**

Annex C (informative) **Application of PTI types in turret lathes** ... **45**

Annex D (informative) **Set-up and design of the PTI interface in turret lathes** ... **47**

Annex E (informative) **Interface for energy and data transfer** ... **50**

Bibliography ... **51**

© ISO 2024 – All rights reserved

Documents
Document Sharing Hub

Full document details: BS ISO 5686-2:2024

Foreword

ISO (the International Organization for Standardization) is a worldwide federation of national standards bodies (ISO member bodies). The work of preparing International Standards is normally carried out through ISO technical committees. Each member body interested in a subject for which a technical committee has been established has the right to be represented on that committee. International organizations, governmental and non-governmental, in liaison with ISO, also take part in the work. ISO collaborates closely with the International Electrotechnical Commission (IEC) on all matters of electrotechnical standardization.

The procedures used to develop this document and those intended for its further maintenance are described in the ISO/IEC Directives, Part 1. In particular, the different approval criteria needed for the different types of ISO document should be noted. This document was drafted in accordance with the editorial rules of the ISO/IEC Directives, Part 2 (see www.iso.org/directives).

ISO draws attention to the possibility that the implementation of this document may involve the use of (a) patent(s). ISO takes no position concerning the evidence, validity or applicability of any claimed patent rights in respect thereof. As of the date of publication of this document, ISO had not received notice of (a) patent(s) which may be required to implement this document. However, implementers are cautioned that this may not represent the latest information, which may be obtained from the patent database available at www.iso.org/patents. ISO shall not be held responsible for identifying any or all such patent rights.

Any trade name used in this document is information given for the convenience of users and does not constitute an endorsement.

For an explanation of the voluntary nature of standards, the meaning of ISO specific terms and expressions related to conformity assessment, as well as information about ISO's adherence to the World Trade Organization (WTO) principles in the Technical Barriers to Trade (TBT), see www.iso.org/iso/foreword.html.

This document was prepared by Technical Committee ISO/TC 29, *Small tools*, Subcommittee SC 9, *Tools with defined cutting edges, holding tools, cutting items, adaptive items and interfaces*.

A list of all parts in the ISO 5686 series can be found on the ISO website.

Any feedback or questions on this document should be directed to the user's national standards body. A complete listing of these bodies can be found at www.iso.org/members.html.

© ISO 2024 – All rights reserved

Documents
Document Sharing Hub
Full document details: BS ISO 5686-2:2024

Polygonal turret interface with flat contact surface —

Part 2:
Receivers of type F, H, A and X for shanks of type F, H and A

1 Scope

This document specifies the dimensions of polygonal taper receivers with flat contact surface (PTI). These receivers are the machine-side part of the interface to the (in cutting process non-rotating) tool carrier of machine tools (e.g. turret lathes, turning centres).

This document specifies four types of machine-side interface types, which differ at the face contact. The bores for receiving the tool shanks themselves are designed identically for all types.

— Receiver type F has one hole for the coolant supply (F = fluid); PTI-F type tool holder can be installed in 0°- and 180°-position.

— Receiver type H has a primary coolant hole for the main supply and a secondary coolant hole for an intermediate tool position on the face contact (H = half). For PTI type H holders an installation position offset by 180° is not possible.

— Receiver type A has one hole on the face contact for the primary coolant supply and one additional hole for supplying the tool holder (driven tool) with sealing air (A = air). Two more bores allow the installation of PTI-A holders with spring-type straight pin in 0°- and 180°-position.

— Receiver type X has a primary coolant hole for the main supply and a secondary coolant hole for an intermediate tool position on the face contact. In addition, the type X receiver has one hole for supplying the tool holder (driven tool) with sealing air and two bores for the 0°- and 180°-position of the spring-type straight pin of PTI-A holders.

2 Normative references

The following documents are referred to in the text in such a way that some or all of their content constitutes requirements of this document. For dated references, only the edition cited applies. For undated references, the latest edition of the referenced document (including any amendments) applies.

ISO 1101, *Geometrical product specifications (GPS) — Geometrical tolerancing — Tolerances of form, orientation, location and run-out*

ISO 2768-1, *General tolerances — Part 1: Tolerances for linear and angular dimensions without individual tolerance indications*

ISO 3040, *Geometrical product specifications (GPS) — Dimensioning and tolerancing — Cones*

3 Terms and definitions

No terms and definitions are listed in this document.

ISO and IEC maintain terminology databases for use in standardization at the following addresses:

— ISO Online browsing platform: available at https://www.iso.org/obp

— IEC Electropedia: available at https://www.electropedia.org/

© ISO 2024 – All rights reserved

Documents
Document Sharing Hub
Full document details: BS ISO 5686-2:2024

4 Polygonal taper receivers, types and dimensions

4.1 General

The dimensions of the polygonal taper receiver with flat contact surface type F are specified in Figure 1, Figure 2 and Annex B. Additional and specific dimensions for type H are given in Figure 3, for type A in Figure 4 and for type X in Figure 5. Table 1 provides the parameters of all types and sizes. Details of the types F, H, A and X, not specified in Figures 1 a), 1b), 2a), 2b), 3, 4 and 5, shall be chosen appropriately.

Type F with bores for the coolant supply is used for both stationary and driven tool holders. Type H is intended for the design of stationary tool holders with an additional coolant bore for an intermediate position. Type A contains a sealing air hole for the supply of driven tool holders. Form X is a combination Type of types H and A and provides two coolant positions and sealing air as well.

Tolerances of form, orientation, location and run-out shall be in accordance with ISO 1101. Dimensions and tolerances of cones shall be in accordance with ISO 3040. Tolerances not specified shall be of tolerance class "m" in accordance with ISO 2768-1.

Details about the application of PTI types in turret lathes see Annex C.

Details about set-up and design of the PTI interface in turret lathes see Annex D.

Details about interface for energy and data transfer see Annex E.

© ISO 2024 – All rights reserved

Documents
Document Sharing Hub
Full document details: BS ISO 5686-2:2024

4.2 Polygonal taper receiver, Type F

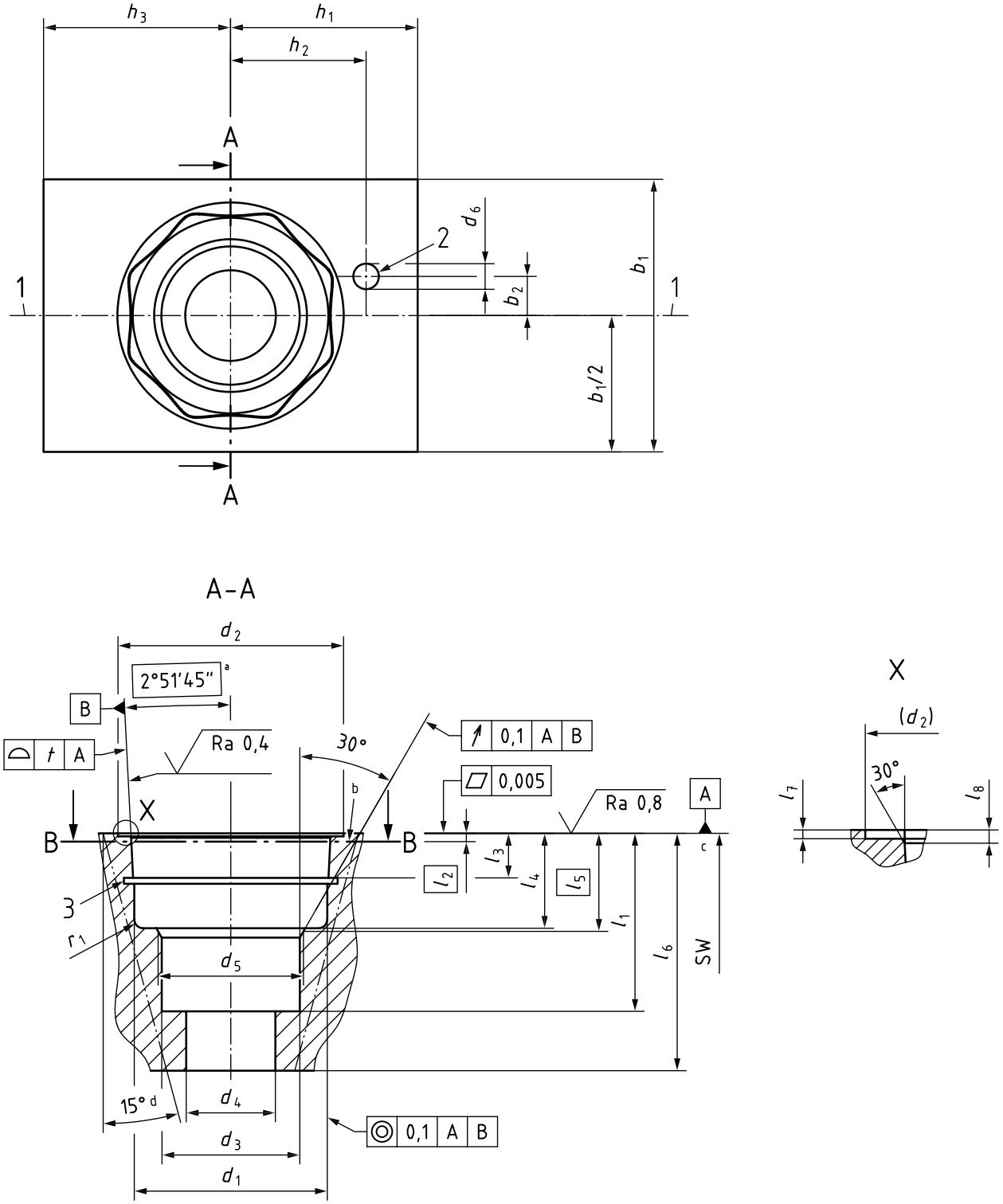

a) Main view

© ISO 2024 – All rights reserved

Documents
Document Sharing Hub
Full document details: BS ISO 5686-2:2024

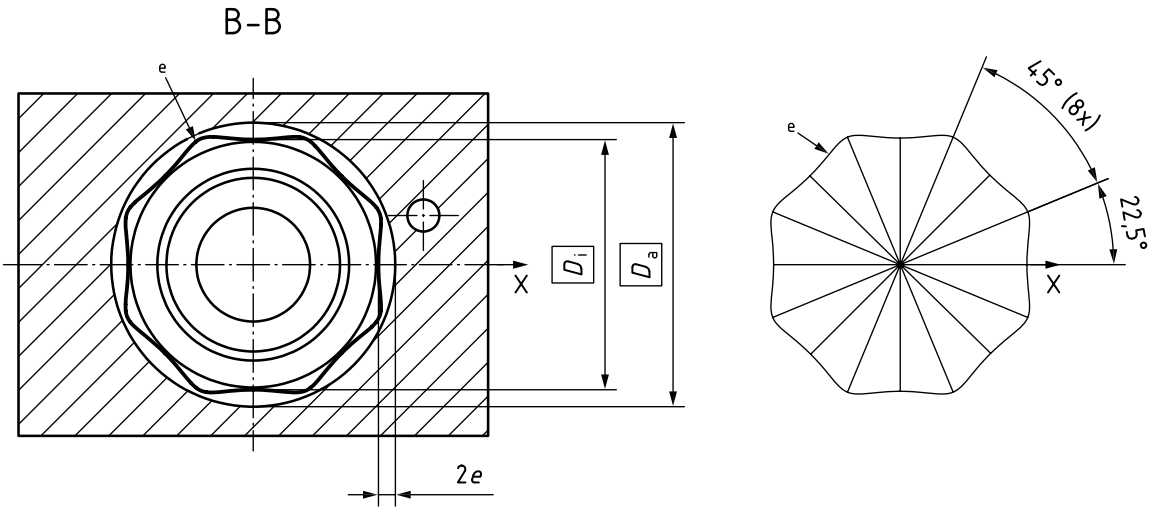

b) Details

Key

1 position of the cutting edge for tools with single cutting edge

2 coolant bore (main version)

3 undercut according to the manufacturer's choice

a Angle valid in any cross section perpendicular to the tangent to the polygon curve.

b Reference plane for polygon curve at a theoretical distance l_2 from the flat contact face.

c Not convex.

d Angle valid for a twelve-fold turret.

e Polygon curve according to the formula in Figure 2 (hypotrochoid with n = 8).

NOTE See Table 1 for all symbols.

Figure 1 — Polygonal taper receiver, Type F

In Figure 2, the hypotrochoidal profile can be described in Cartesian coordinates by the following parametric Formulae (1) and (2):

$$x(\varphi) = r \cdot \cos(\varphi) - e \cdot \cos[(n-1) \cdot \varphi] \quad (1)$$

$$y(\varphi) = r \cdot \sin(\varphi) + e \cdot \sin[(n-1) \cdot \varphi] \quad (2)$$

where

a is the radius of the base circle K_B;

b is the radius of the pitch circle K_R;

r is the base radius of the H-profile for the parameter equations;

n is the number of drivers (n = 8, for the hypotrochoidal profile of this standard);

e is the eccentricity;

φ is the parameter angle 0° to 360°.

© ISO 2024 – All rights reserved

Documents
Document Sharing Hub
Full document details: BS ISO 5686-2:2024

The relationships between the base radius r, with the minimum circumscribed circle diameter Da and with the maximum inscribed circle diameter Di are described in Formulae (3) and (4):

$$r = Di/2 + e = a - b \quad (3)$$

$$r = Da/2 - e \quad (4)$$

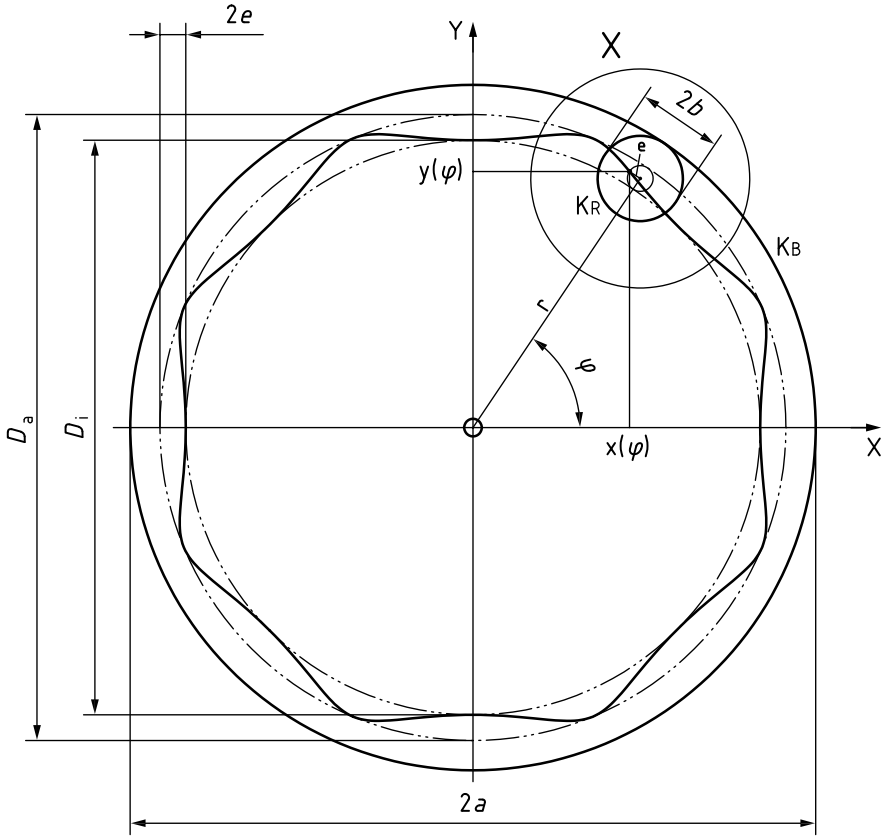

a) Main measurements, formulae

© ISO 2024 – All rights reserved

Documents
Document Sharing Hub
Full document details: BS ISO 5686-2:2024

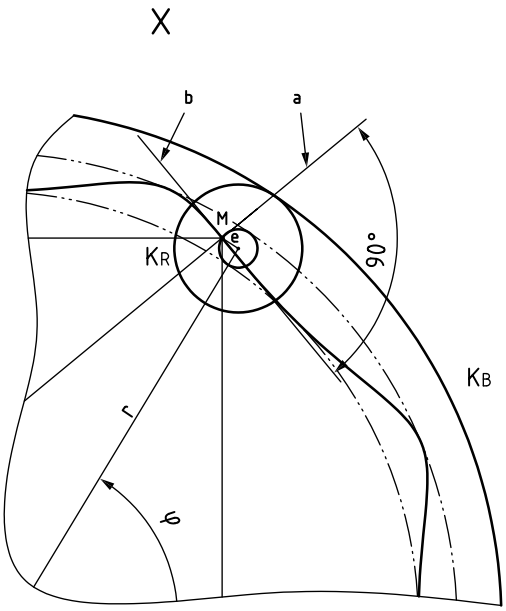

b) Enlarged detail

Key

a Perpendicular to the polygon curve at the tangent contact point.

b Tangen to the polygon curve with the point $x(\varphi), y(\varphi)$.

M Point on the polygon curve at the coordinates $x(\varphi), y(\varphi)$.

Figure 2 — Polygon curve (hypotrochoid)

4.3 Polygonal taper receiver, Type H

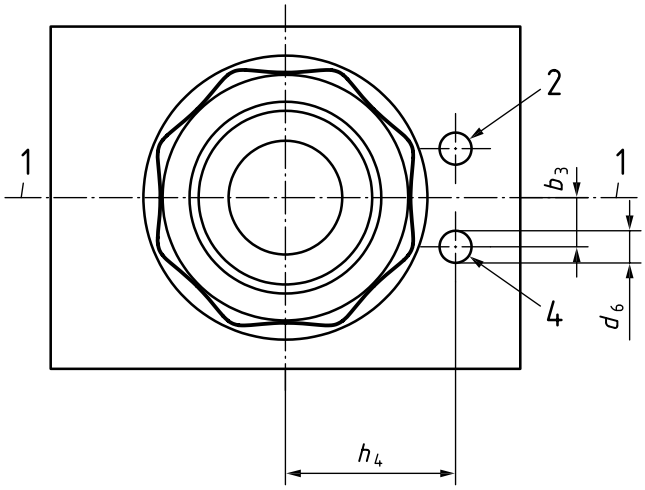

Key

1 position of the cutting edge for tools with single cutting edge

2 coolant bore (main version)

4 coolant bore for an intermediate position

NOTE All unspecified dimensions and specifications are given in Figure 1 and Figure 2.

Figure 3 — Polygonal taper receiver, Type H

© ISO 2024 – All rights reserved

Documents
Document Sharing Hub
Full document details: BS ISO 5686-2:2024

4.4 Polygonal taper receiver, Type A

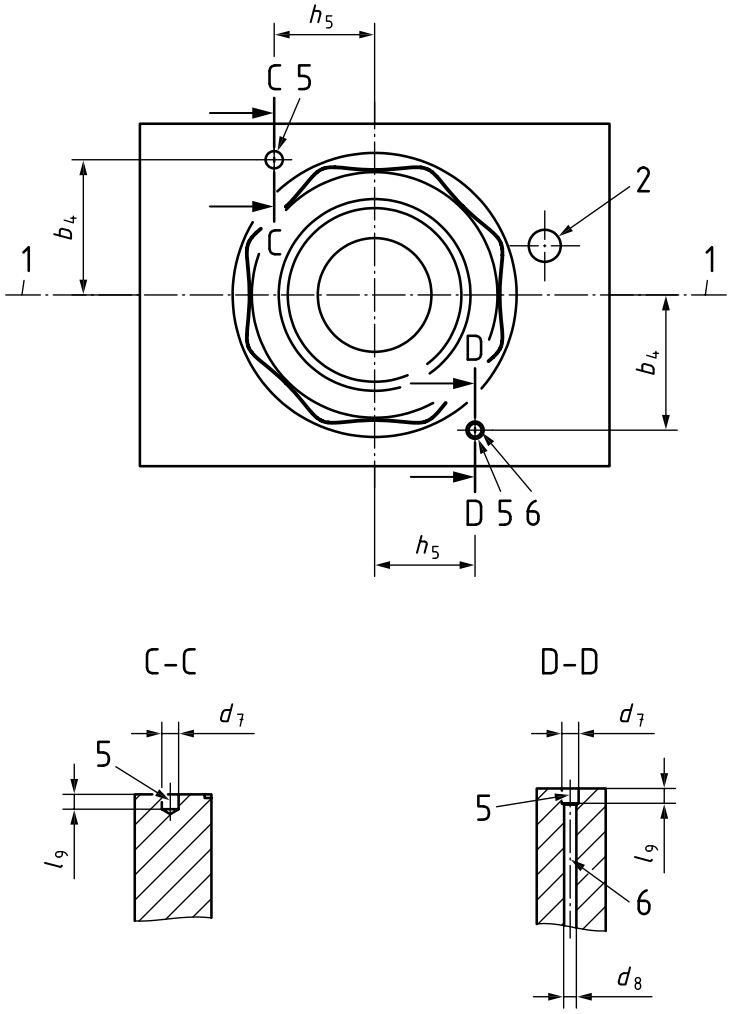

Key

1 position of the cutting edge for tools with single cutting edge

2 coolant bore (main version)

5 bore for insertion of spring-type straight pin

6 sealing air hole

NOTE All unspecified dimensions and specifications are given in Figure 1 and Figure 2.

Figure 4 — Polygonal taper receiver, Type A

© ISO 2024 – All rights reserved

Documents
Document Sharing Hub
Full document details: BS ISO 5686-2:2024

4.5 Polygonal taper receiver, Type X

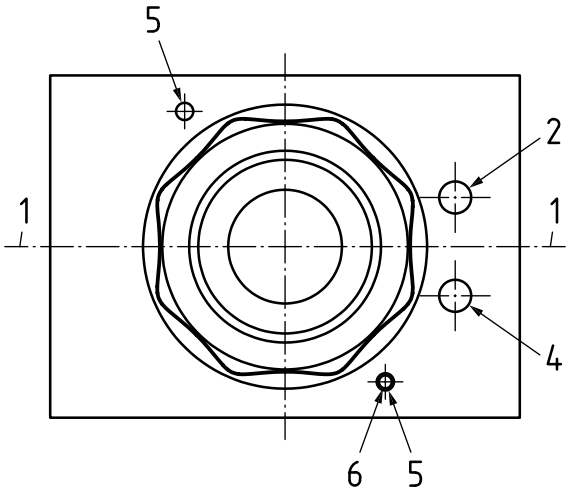

Key

1 position of the cutting edge for tools with single cutting edge
2 coolant bore (main version)
4 coolant bore for an intermediate position
5 bore for insertion of spring-type straight pin
6 sealing air hole

NOTE All unspecified dimensions and specifications are given in Figure 1 and Figure 2.

Figure 5 — Polygonal taper receiver, Type X

4.6 Dimensions

The dimensions of polygonal taper receivers defined in this document shall be in accordance with Table 1.

Table 1 — Polygonal taper receiver, Types F, H, A and X — Dimensions

Dimensions in millimetres

Size		42	54	65	F	H	A	X
b_1	min	58,9	75	91,1	x	x	x	x
b_2		6,5	10	13	x	x	x	x
b_3		6,5	10	13	—	x	—	x
b_4	±0,1	23,8	30	36	—	—	x	x
d_1	+0,2	42	54	65	x	x	x	x
d_2		50	63	76	x	x	x	x
d_3	+0,1	30,3	38,5	46,5	x	x	x	x
d_4	+0,1	16	24	29	x	x	x	x
d_5	±0,1	31,5	40,3	49	x	x	x	x
d_6	max	5,5	7	8,5	x	x	x	x
d_7	+0,1	4,5	4,5	4,5	—	—	x	x
d_8		3,3	3,3	3,3	—	—	x	x
D_a		47	60	73	x	x	x	x
D_i		43	55	67	x	x	x	x

[a] Values are valid for a twelve-fold turret.

© ISO 2024 – All rights reserved

Documents
Document Sharing Hub
Full document details: BS ISO 5686-2:2024

Table 1 *(continued)*

Size		42	54	65	F	H	A	X
e		1	1,25	1,5	x	x	x	x
h_1	min	40,5	48	58	x	x	x	x
h_2	±0,2	31	38	45	x	x	x	x
h_3	min	40,5	48	58	x	x	x	x
h_4	±0,2	31	38	45	—	x	—	x
h_5	±0,1	18	22	27	—	—	x	x
l_1		39	49,5	60	x	x	x	x
l_2		2	2,5	3	x	x	x	x
l_3	±0,1	7,5	10,2	12,2	x	x	x	x
l_4	±0,05	20	26	32	x	x	x	x
l_5		20,6	26,8	33	x	x	x	x
l_6	min	49	62	74	x	x	x	x
l_7		0,7	0,85	1	x	x	x	x
l_8		1	1,3	1,5	—	—	x	x
l_9		5	5	5	—	—	x	x
n		8	8	8	x	x	x	x
r_1	max	1,2	1,5	1,8	x	x	x	x
SW[a]	min	220	280	340	x	x	x	x
t		0,005	0,006	0,008	x	x	x	x

[a] Values are valid for a twelve-fold turret.

5 Design

5.1 Fastening of the PTI tool holders

Two functional areas are provided for fastening the PTI tool holders. The PTI holder has a tightly tolerated 25° clamping shoulder in the lower cylindrical area of the shank for the application of consistent clamping forces and is usable for manual quick change. At the end of the shank, there is a second precise 30° conical surface inverse to the clamping shoulder, which can be used for releasing and ejection. The clamping systems and their installation space are not part of this document.

In principle, automatic clamping of the PTI tool holder is possible. However, for the PTI tool holders specified in this document, no special gripping elements for an automatic change have been provided so far.

5.2 Clamping forces

The clamping system shall be designed in such a way that there is sufficient clamping force to establish contact between the flat surface of the tool holder and the front surface on the receiver after the polygon cone has taken its fitting position due to elastic deformation. The performance of the interface with regard to the transfer of bending moment is largely determined by the size of the clamping force.

To facilitate the practical application of PTI tool holders, the clamping forces specified in Annex A for manual clamping systems can be used.

5.3 Material and heat treatment

Polygonal taper receivers are manufactured from either tempered or case-hardening steel with a core strength of at least 800 N/mm^2 and a surface hardness of at least 58+4 HRC.

© ISO 2024 – All rights reserved

Documents
Document Sharing Hub
Full document details: BS ISO 5686-2:2024

6 Designation

A polygonal taper receiver in accordance with this document shall be designated by:

a) polygonal taper receiver,

b) this document, i.e. ISO 5686-2,

c) PTI,

d) F, H, A or X (type),

e) nominal size, in millimeters (e.g. 65), corresponds to dimension d_1 of this document.

EXAMPLE 1 A polygonal turret interface (PTI), receiver type F, size 65, for coolant supply is designated as follows:

Polygonal receiver ISO 5686-2 — PTI-F 65

EXAMPLE 2 A polygonal turret interface (PTI), receiver type H, size 54, for main and intermediate coolant supply is designated as follows:

Polygonal taper receiver ISO 5686-2 — PTI-H 54

EXAMPLE 3 A polygonal turret interface (PTI), receiver type A, size 42, for combined coolant and sealing air supply is designated as follows:

Polygonal taper receiver ISO 5686-2 — PTI-A 42

© ISO 2024 – All rights reserved

Documents
Document Sharing Hub
Full document details: BS ISO 5686-2:2024

Annex A
(informative)

Clamping forces for PTI receivers of types F, H, A and X

The clamping forces for all sizes of the PTI receivers (types F, H, A and X), shown in Table A.1, are recommended for quick change clamping systems and clamping force initiation on the hardened 25° clamping shoulder of the PTI shank. A second hardened 30° chamfer at the PTI shank can be used to loosen the connection (see Figure A.1).

Table A.1 — Clamping forces

Nominal size		42	54	65
Clamping force	kN	35	50	70

NOTE Lower clamping forces can be sufficient when operational loads are also low (e.g. cutting and feed forces of finish machining). Higher clamping forces however can be required when high operational loads occur (e.g. cutting and feed forces of heavy machining).

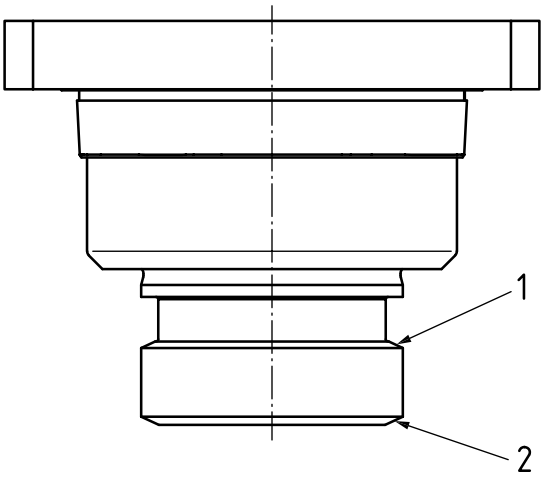

Key

1 25° shoulder for clamping actuation (hardened 56 + 4 HRC)

2 30° chamfer for releasing actuation (hardened 56 + 4 HRC)

Figure A.1 — Clamping elements of the PTI interface

© ISO 2024 – All rights reserved

Documents
Document Sharing Hub
Full document details: BS ISO 5686-2:2024

Annex B
(informative)

Measuring planes for contour determination of the polygon

With the dimensions, tolerances and instructions given in this document, the shape of the polygon cone can be clearly manufactured (turning, milling, grinding). The polygon cone is manufactured based on the description of the polygon (hypotrochoid) defined at distance l_2 (see Table 1) according to the formula in Figure 2 a) and Figure 2 b). The associated coordinate values for this main measurement plane are given in Tables B.2, B.4 and B.6 for the three nominal sizes. The x and y coordinates (in mm) are specified in 0,1° increments for a range of the angle φ from 0° to 22,5°. Due to the symmetry of the eight-fold polygon, the missing coordinate values from 22,6° to 359,9° can be determined trigonometrically.

Based on the hypotrochoid shape of the polygon at a distance l_2, the shape of the polygon along the polygon height is determined by specifying the cone angle (cone 1:10). The cone angle applies in any section perpendicular to the tangent to the polygon curve. The polygonal contour is a hypotrochoid only at reference distance l_2. In all other sectional planes, contours deviate from the mathematically exact hypotrochoid shape.

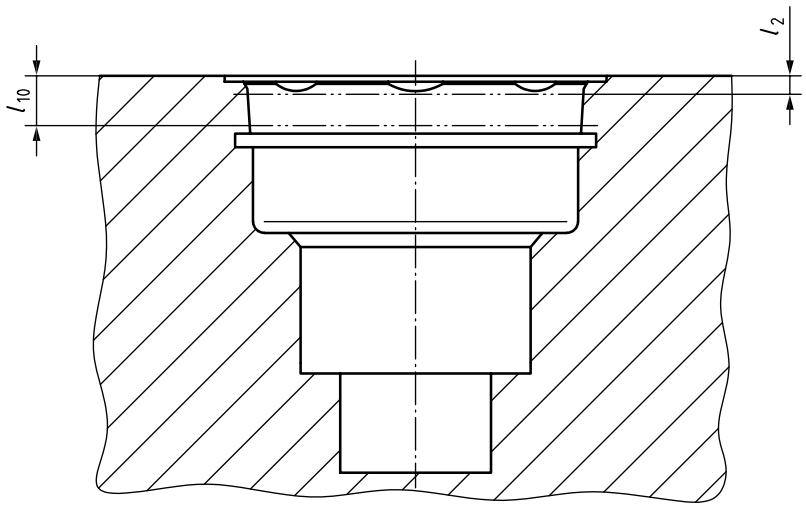

Figure B.1 — Measurement distances for determination of polygon contour

In order to uniformly define the measurement of the polygon contour, a further measuring distance l_{10} is recommended to check the tolerances on a second level (see Figure B.1). Table B.1 shows the values of the measuring distance l_{10}.

Table B.1 — Values for measuring distances for polygon contour measurement

Nominal size	42	54	65
Measuring distance l_{10} mm	6	8,5	10

The geometrically exact polygon curves of the second measuring plane at a distance l_{10} were determined analytically and shown in Tables B.3, B.5 and B.7 for the three nominal sizes with reference to the coordinate system according to Figure 2 a) and Figure 2 b) (angle φ in°, coordinates x and y in mm).

© ISO 2024 – All rights reserved

Documents
Document Sharing Hub
Full document details: BS ISO 5686-2:2024