BS ISO 5700:2013

BSI Standards Publication

# Tractors for agriculture and forestry — Roll-over protective structures — Static test method and acceptance conditions

bsi.

...making excellence a habit.™

Document Sharing Hub

Full document details: BS ISO 5700:2013

## National foreword

This British Standard is the UK implementation of ISO 5700:2013. It supersedes BS ISO 5700:2006 which is withdrawn.

The UK participation in its preparation was entrusted to Technical Committee AGE/6, Agricultural tractors and forestry machinery.

A list of organizations represented on this committee can be obtained on request to its secretary.

This publication does not purport to include all the necessary provisions of a contract. Users are responsible for its correct application.

© The British Standards Institution 2013. Published by BSI Standards Limited 2013

ISBN 978 0 580 68040 3

ICS 65.060.10; 65.060.80

**Compliance with a British Standard cannot confer immunity from legal obligations.**

This British Standard was published under the authority of the Standards Policy and Strategy Committee on 30 June 2013.

**Amendments issued since publication**

| Date | Text affected |
|---|---|

Documents
Document Sharing Hub

Full document details: BS ISO 5700:2013

# INTERNATIONAL STANDARD

# ISO 5700

Fifth edition
2013-05-01

# Tractors for agriculture and forestry — Roll-over protective structures — Static test method and acceptance conditions

*Tracteurs agricoles et forestiers — Structures de protection contre le retournement — Méthode d'essai statique et conditions d'acceptation*

Reference number
ISO 5700:2013(E)

Documents
Document Sharing Hub

© ISO 2013

Full document details: BS ISO 5700:2013

**COPYRIGHT PROTECTED DOCUMENT**

© ISO 2013

All rights reserved. Unless otherwise specified, no part of this publication may be reproduced or utilized otherwise in any form or by any means, electronic or mechanical, including photocopying, or posting on the internet or an intranet, without prior written permission. Permission can be requested from either ISO at the address below or ISO's member body in the country of the requester.

ISO copyright office
Case postale 56 • CH-1211 Geneva 20
Tel. + 41 22 749 01 11
Fax + 41 22 749 09 47
E-mail copyright@iso.org
Web www.iso.org

Published in Switzerland



© ISO 2013 – All rights reserved

Documents
Document Sharing Hub

Full document details: BS ISO 5700:2013

# Contents

Page

**Foreword** ... **iv**
**Introduction** ... **v**
**1 Scope** ... **1**
**2 Normative references** ... **1**
**3 Terms and definitions** ... **1**
**4 Symbols and abbreviated terms** ... **4**
**5 Apparatus** ... **4**
5.1 Horizontal loading tests ... 4
5.2 Crushing tests ... 8
**6 Preparation of tractor and ROPS for testing** ... **9**
**7 Test procedures** ... **10**
7.1 Sequence of tests ... 10
7.2 Horizontal loading from rear, front and side ... 11
7.3 Crushing tests ... 15
7.4 Second longitudinal loading ... 18
**8 Determination of seat index point (SIP), seat location and adjustment for test** ... **18**
8.1 Seat index point ... 18
8.2 Seat location and adjustment for test ... 18
**9 Clearance zone** ... **19**
9.1 Determination of the clearance zone ... 19
9.2 Determination of the clearance zone for tractors with a non-reversible seat ... 20
9.3 Determination of the clearance zone for tractors with a reversible driver's position ... 21
9.4 Optional seats ... 22
**10 Tolerances** ... **22**
**11 Acceptance conditions** ... **23**
11.1 General ... 23
11.2 Clearance zone ... 23
11.3 Recording permanent deflection ... 23
11.4 Required force ... 23
11.5 Overload test ... 23
11.6 Additional conditions ... 25
11.7 Cold weather embrittlement ... 25
**12 Seatbelt anchorage performance** ... **26**
**13 Labelling** ... **26**
**14 Extension to other tractor models** ... **26**
14.1 Administrative extension ... 26
14.2 Technical extension ... 26
**15 Test report** ... **27**
**Annex A** (normative) **Optional requirements for providing resistance to brittle fracture of roll-over protective structure at reduced operating temperature** ... **28**
**Annex B** (normative) **Test report for roll-over protective structure** ... **30**
**Annex C** (informative) **Designation of Maintenance Agency** ... **36**
**Bibliography** ... **37**

© ISO 2013 – All rights reserved


Documents
Document Sharing Hub
Full document details: BS ISO 5700:2013

# Foreword

ISO (the International Organization for Standardization) is a worldwide federation of national standards bodies (ISO member bodies). The work of preparing International Standards is normally carried out through ISO technical committees. Each member body interested in a subject for which a technical committee has been established has the right to be represented on that committee. International organizations, governmental and non-governmental, in liaison with ISO, also take part in the work. ISO collaborates closely with the International Electrotechnical Commission (IEC) on all matters of electrotechnical standardization.

The procedures used to develop this document and those intended for its further maintenance are described in the ISO/IEC Directives, Part 1. In particular the different approval criteria needed for the different types of ISO documents should be noted. This document was drafted in accordance with the editorial rules of the ISO/IEC Directives, Part 2. www.iso.org/directives

Attention is drawn to the possibility that some of the elements of this document may be the subject of patent rights. ISO shall not be held responsible for identifying any or all such patent rights. Details of any patent rights identified during the development of the document will be in the Introduction and/or on the ISO list of patent declarations received. www.iso.org/patents

Any trade name used in this document is information given for the convenience of users and does not constitute an endorsement.

The committee responsible for this document is ISO/TC 23, *Agriculture and forestry machinery*, Subcommittee SC 2, *Common tests*.

This fifth edition cancels and replaces the fourth edition (ISO 5700:2006), which has been technically revised for the technical harmonization with OECD Code 4:July 2012.


© ISO 2013 – All rights reserved
Documents
Document Sharing Hub
Full document details: BS ISO 5700:2013

# Introduction

Testing of roll-over protective structures (ROPS) for wheeled or tracked tractors for agriculture and forestry aims at avoiding or limiting risks to the driver resulting from accidental overturning during normal operation (e.g. field work) of the tractor. The strength of the ROPS is tested by applying static loads and a static crushing test to simulate actual loads which can be imposed on the cab or frame when the tractor overturns either to the rear or to the side without free fall. The tests allow observations to be made on the strength of the structure and the attachment brackets to the tractor and also of the tractor parts that could be affected by the load imposed on the structure.

Provision is made to cover both tractors with the conventional forward-facing driver's position only, as well as those with a reversible driver's position. For tractors with a reversible driver's position, a clearance zone is defined to be the combined clearance zones for the two driving positions. The point of application of the side loading is determined as the mid-point between the seat index points measured in the two positions.

It is recognized that there could be tractor designs — for example, lawn-mowers, narrow vineyard tractors, low profile tractors used in low buildings with limited overhead clearance, orchards, etc., stilt tractors and certain forestry machines such as forwarders — for which this International Standard is not appropriate.

This International Standard specifies technical performance requirements, associated test procedures and performance test report information. Technical harmonization with OECD is ensured by the Maintenance Agency operating as specified in Annex C.

NOTE For narrow-track wheeled tractors, see ISO 12003-1[6] and ISO 12003-2.[7]

© ISO 2013 – All rights reserved

Documents
Document Sharing Hub
Full document details: BS ISO 5700:2013

Documents
Document Sharing Hub

INTERNATIONAL STANDARD ISO 5700:2013(E)

# Tractors for agriculture and forestry — Roll-over protective structures — Static test method and acceptance conditions

## 1 Scope

This International Standard specifies a static test method and the acceptance conditions for roll-over protective structures (cab or frame) of wheeled or tracked tractors for agriculture and forestry.

It is applicable to tractors having at least two axles for wheels mounted with pneumatic tyres, or having tracks instead of wheels, with an unballasted tractor mass of not less than 600 kg and a minimum track width of the rear wheels greater than 1 150 mm. It is not applicable to tractors having a mass ratio (maximum permissible mass / reference mass) greater than 1,75.

## 2 Normative references

The following referenced documents are indispensable for the application of this document. For dated references, only the edition cited applies. For undated references, the latest edition of the referenced document (including any amendments) applies.

ISO 630-1:2011, *Structural steels — Part 1: General technical delivery conditions for hot-rolled products*

ISO 5353:1995, *Earth-moving machinery, and tractors and machinery for agriculture and forestry — Seat index point*

ASTM A370, *Standard Test Methods and Definitions for Mechanical Testing of Steel Products*

## 3 Terms and definitions

For the purposes of this document, the following terms and definitions apply.

**3.1**
**roll-over protective structure**
**ROPS**
framework (safety cab or frame) protecting drivers of tractors for agricultural and forestry that avoids or limits risk to the driver resulting from accidental overturning during normal operation

Note 1 to entry: The ROPS is characterized by the provision of space for a clearance zone, as defined in 9.1, either inside the envelope of the structure or within a space bounded by a series of straight lines from the outer edges of the structure to any part of the tractor that might come into contact with flat ground and that is capable of supporting the tractor in that position if the tractor overturns.

**3.2**
**unballasted tractor mass**
mass of the tractor in working order with tanks and radiators full, roll-over protective structure with cladding, and any track equipment or additional front-wheel drive components required for normal use

Note 1 to entry: Not included are the operator, optional ballast weights, additional wheel equipment, special equipment and loads.

© ISO 2013 – All rights reserved



Documents
Document Sharing Hub
Full document details: BS ISO 5700:2013

**3.3**
**reference mass**
$m_t$
mass, not less than the unballasted mass, selected by the manufacturer for calculation of the energy inputs and crushing forces to be used in the tests

Note 1 to entry: The reference mass shall not be less than the unballasted mass and must be sufficient to ensure the mass ratio does not exceed 1,75.

**3.4**
**maximum permissible mass**
**technically permissible mass**
maximum allowable equipment mass and allowable payload specified by the manufacturer

Note 1 to entry: This mass corresponds to the sum of the technically maximum possible axle loads.

**3.5**
**mass ratio**
number calculated by taking the maximum permissible mass divided by reference mass

**3.6**
**horizontal loading test**
application of a horizontal load to the rear, front and side of the roll-over protective structure

**3.7**
**crushing test**
application of a vertical load through a beam placed laterally across the uppermost members of the roll-over protective structure

**3.8**
**longitudinal median plane**
longitudinal plane of symmetry
zero Y plane
vertical plane Y passing through the mid-points of AB, perpendicular to AB, A and B being such that

— for each wheel, the vertical plane passing through its axis cuts the mid-plane of the wheel following a straight line Δ which meets the supporting surface of the vehicle at one point, and

— A and B are two points thus defined which correspond to two wheels, both of which are either steering or powered wheels, situated respectively at the two ends of the same real or imaginary axle

See Figure 1.

Note 1 to entry: The mid-plane of the dual wheels being equidistant from the inner edge of one wheel and the outer edge of the other, the straight line Δ is, in this particular case, the intersection of the mid-plane of the dual wheels and the vertical plane passing through the axis of the axle pin.

Note 2 to entry: Adapted from ISO 612:1978, Clause 5.

Note 3 to entry: The longitudinal median plane may also be applied to track-laying tractors.


© ISO 2013 – All rights reserved
Documents
Document Sharing Hub
Full document details: BS ISO 5700:2013

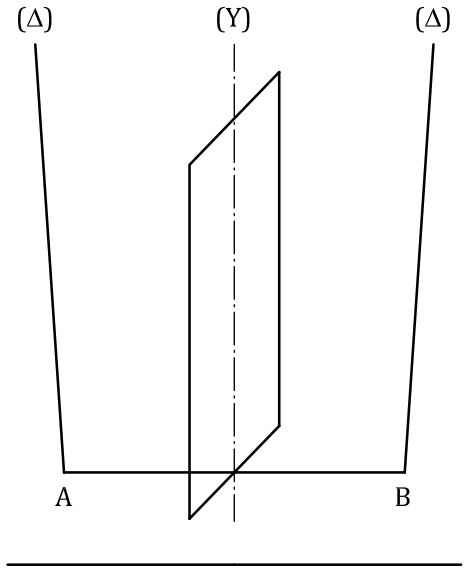


**Figure 1 — Longitudinal median plane**

**3.9**
**track width**
distance between the median planes of the wheels or tracks

Note 1 to entry: If A and B are the two points thus defined for the wheels on the same axle of the tractor, then the track width is the distance between points A and B. The track may be defined for both front and rear wheels.

Note 2 to entry: Where there are dual wheels, the track width is the distance between two planes, each of which is the median plane of the pairs of wheels.

Note 3 to entry: For track-laying tractors, the track width is the distance between the median planes of the tracks.

**3.10**
**vertical reference plane**
plane established before any application of loading, generally longitudinal to the tractor, passing through the seat index point (SIP) and the steering-wheel centre and which is used for establishing the resultant load point in crush loading tests

Note 1 to entry: When a steering wheel does not exist, a vertical plane passing through the SIP and parallel to the longitudinal median plane of the tractor is used. Normally, the reference plane coincides with the longitudinal median plane of the tractor.

**3.11**
**seat reference plane**
vertical plane generally longitudinal to the tractor, passing through the seat index point and to the steering wheel centre and which is used for establishing the clearance zone

Note 1 to entry: This plane is established at the beginning of the series of tests and normally coincides with the longitudinal median plane of the tractor. This plane is assumed to move horizontally with the seat and steering wheel during loading but to remain perpendicular to the tractor or the floor of the ROPS if the latter is resiliently mounted. When a steering wheel does not exist, a vertical plane passing through the SIP and parallel to the longitudinal median plane of the tractor is used.

**3.12**
**wheelbase**
distance between the vertical planes passing through the two lines AB, as defined in 3.8, one for the front wheels and one for the rear wheels

© ISO 2013 – All rights reserved

Documents
Document Sharing Hub
Full document details: BS ISO 5700:2013

**3.13**
**agricultural tractor**
self-propelled agricultural vehicle having at least two axles, or a track-laying agricultural vehicle, and having a maximum design speed of not less than 6 km/h, particularly designed to pull, push, carry and operate implements used for agricultural work (including forestry work), which may be provided with a detachable loading platform

Note 1 to entry: It may be equipped with one or more seats.

## 4 Symbols and abbreviated terms

For the purposes of this document, the symbols in Table 1 apply.

**Table 1 — Symbols**

| Symbol | Description | Unit |
|---|---|---|
| $a_h$ | Half of the horizontal seat adjustment | mm |
| $a_v$ | Half of the vertical seat adjustment | mm |
| $D$ | Deflection of the ROPS for the calculated basic energy required at the point of, and in line with, the load application | mm |
| $D'$ | Deflection of the protective structure for the calculated energy required | mm |
| $E_{il1}$ | Energy input to be absorbed during first longitudinal loading | J |
| $E_{il2}$ | Energy input to be absorbed during second longitudinal loading | J |
| $E_{is}$ | Energy input to be absorbed during side loading | J |
| $F$ | Static load force for the basic energy required | N |
| $F_{max}$ | Maximum static load force occurring during loading (excluding overload) | N |
| $F'$ | Force for the calculated energy required | N |
| $F_f$ | Applied force at front in the crushing test | N |
| $F_r$ | Applied force at rear in the crushing test | N |
| $m_t$ | Reference mass | kg |
| $W$ | Width of the ROPS | mm |

## 5 Apparatus

### 5.1 Horizontal loading tests

**5.1.1** Material, equipment and attachment means for ensuring that the tractor chassis is firmly fixed to the ground and supported independently of the tyres.

**5.1.2** Means of applying a horizontal force to the roll-over protective structure, such as are shown in Figures 2, 3 and 4, complying with the requirements of 5.1.2.1 to 5.1.2.4.


© ISO 2013 – All rights reserved
Documents
Document Sharing Hub
Full document details: BS ISO 5700:2013

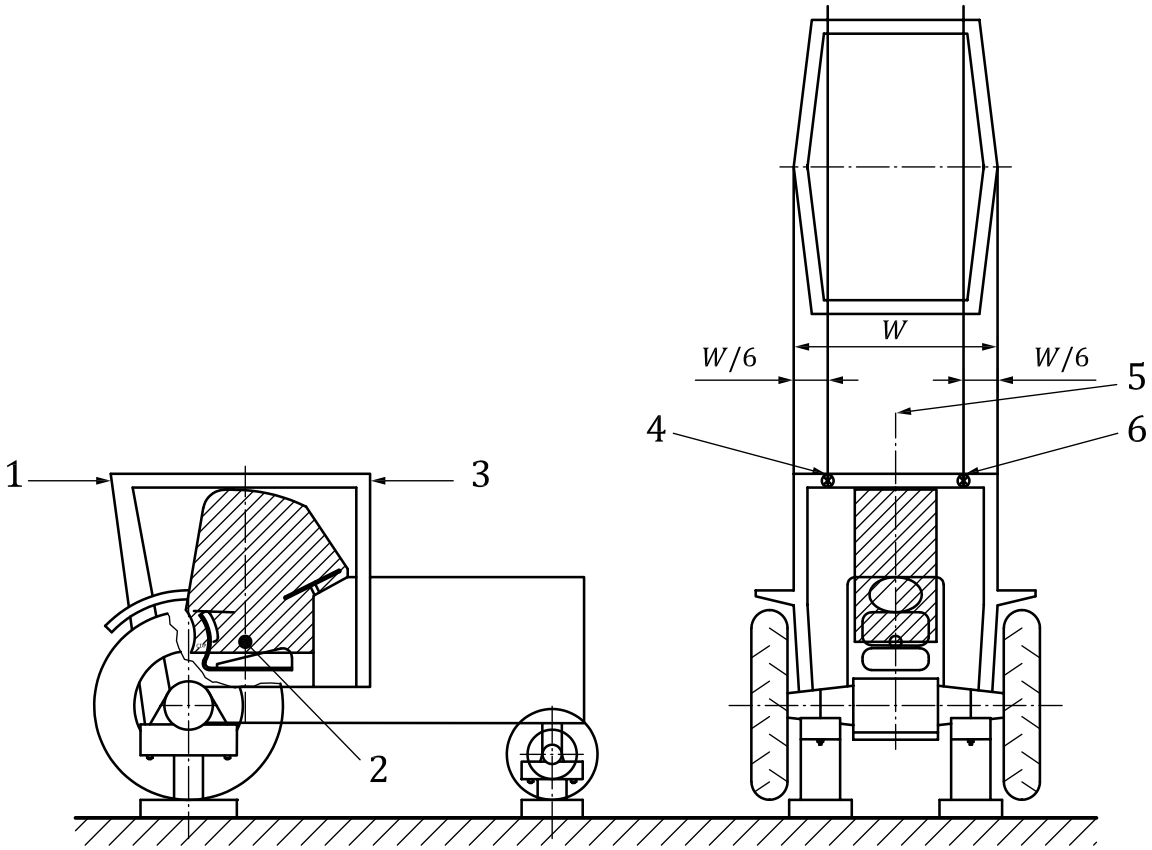


**Key**

1 rear load
2 seat index point
3 front load
4 second longitudinal load, front or rear
5 seat reference plane, longitudinal median plane
6 longitudinal load, rear or front

**Figure 2 — Front and rear load application**

© ISO 2013 – All rights reserved

Documents
Document Sharing Hub
Full document details: BS ISO 5700:2013

Dimensions in millimeters

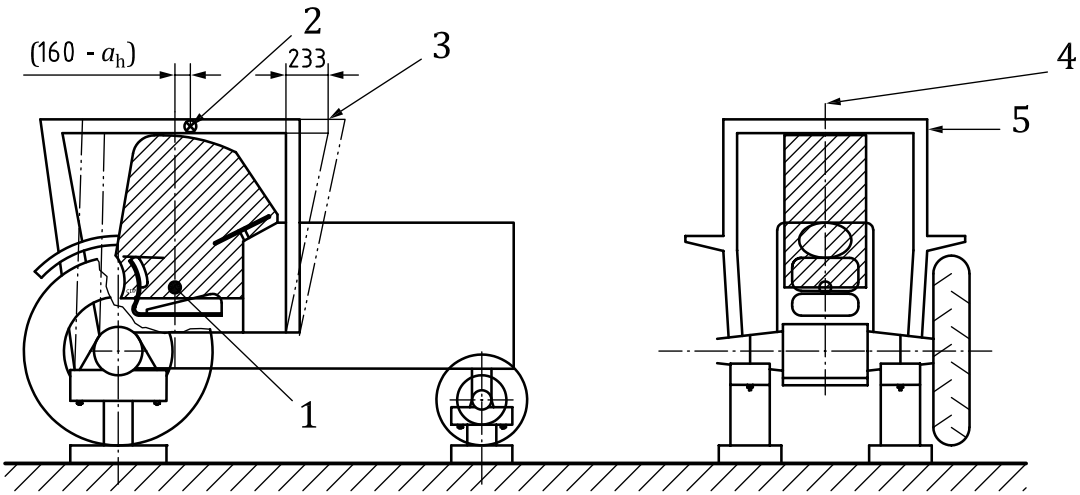


**Key**

1 seat index point
2 point of side load application (see 7.2.3)
3 deflection due to rear longitudinal loading
4 seat reference plane, longitudinal median plane
5 load

**Figure 3 — Side load application: Protective cab**

Dimensions in millimeters

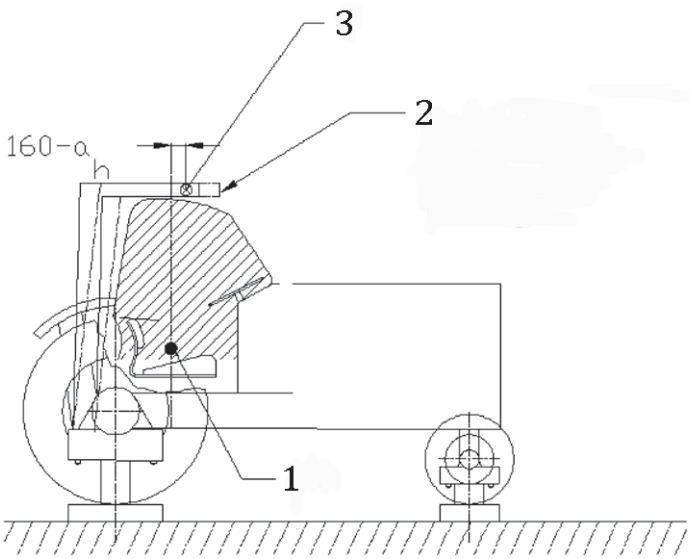


**Key**

1 seat index point
2 deflection due to rear longitudinal loading
3 point of side load application (see 7.2.3)

**Figure 4 — Side load application: Rear roll bar frame**


© ISO 2013 – All rights reserved
Documents
Document Sharing Hub
Full document details: BS ISO 5700:2013

**5.1.2.1** It shall be ensured that the load can be uniformly distributed normal to the direction of loading and along a beam of length between 250 mm and 700 mm, in an exact multiple of 50 mm.

**5.1.2.2** The edges of the beam in contact with the roll-over protective structure shall be curved with a maximum radius of 50 mm.

**5.1.2.3** Universal joints, or the equivalent, shall be incorporated to ensure that the loading device does not constrain the structure in rotation or translation in any direction other than the loading direction.

**5.1.2.4** Where the roll-over protective structure's length, covered by the appropriate load-applying beam, does not constitute a straight line normal to the load application direction, the space shall be packed so as to distribute the load over this length.

**5.1.3** Equipment for measuring force and deflection along the direction of application of the force and relative to the tractor chassis. To ensure accuracy, measurements shall be taken as continuous recordings. The measuring devices shall be located so as to record the force and deflection at the point of, and along the line of, loading.

**5.1.4** Means of proving that the clearance zone has not been entered during the test. A measuring rig based on the clearance zone as shown in Figure 5 may be used. The dimensions are given in Table 2.

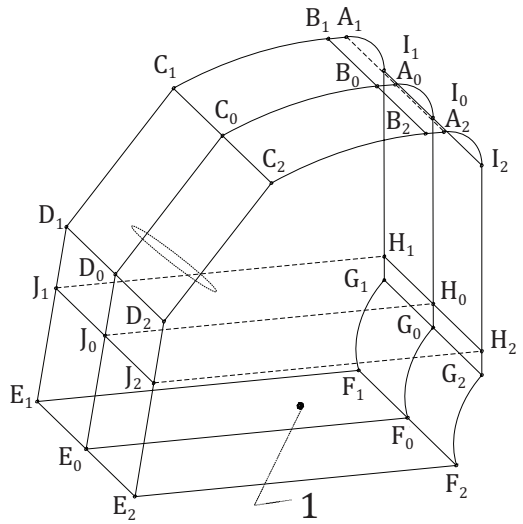


**Key**

1 seat index point

**Figure 5 — Clearance zone measuring rig**

© ISO 2013 – All rights reserved

Documents
Document Sharing Hub
Full document details: BS ISO 5700:2013