BS ISO 5700:2025

BSI Standards Publication

Tractors for agriculture and forestry — Roll-over protective structures — Static test method and acceptance conditions

Documents
Document Sharing Hub

Full document details: BS ISO 5700:2025

National foreword

This British Standard is the UK implementation of ISO 5700:2025. It supersedes BS ISO 5700:2013, which is withdrawn.

The UK participation in its preparation was entrusted to Technical Committee AGE/6, Agricultural tractors and forestry machinery.

A list of organizations represented on this committee can be obtained on request to its committee manager.

Contractual and legal considerations

This publication has been prepared in good faith, however no representation, warranty, assurance or undertaking (express or implied) is or will be made, and no responsibility or liability is or will be accepted by BSI in relation to the adequacy, accuracy, completeness or reasonableness of this publication. All and any such responsibility and liability is expressly disclaimed to the full extent permitted by the law.

This publication is provided as is, and is to be used at the recipient's own risk.

The recipient is advised to consider seeking professional guidance with respect to its use of this publication.

This publication is not intended to constitute a contract. Users are responsible for its correct application.

© The British Standards Institution 2025
Published by BSI Standards Limited 2025

ISBN 978 0 539 24506 6

ICS 65.060.10; 65.060.80

Compliance with a British Standard cannot confer immunity from legal obligations.

This British Standard was published under the authority of the Standards Policy and Strategy Committee on 31 January 2025.

Amendments/corrigenda issued since publication

Date	Text affected

Documents
Document Sharing Hub

Full document details: BS ISO 5700:2025

International Standard

ISO 5700

Sixth edition
2025-01

Tractors for agriculture and forestry — Roll-over protective structures — Static test method and acceptance conditions

Tracteurs agricoles et forestiers — Structures de protection contre le retournement — Méthode d'essai statique et conditions d'acceptation

Reference number
ISO 5700:2025(en)

© ISO 2025

Documents
Document Sharing Hub

Full document details: BS ISO 5700:2025

COPYRIGHT PROTECTED DOCUMENT

© ISO 2025

All rights reserved. Unless otherwise specified, or required in the context of its implementation, no part of this publication may be reproduced or utilized otherwise in any form or by any means, electronic or mechanical, including photocopying, or posting on the internet or an intranet, without prior written permission. Permission can be requested from either ISO at the address below or ISO's member body in the country of the requester.

ISO copyright office
CP 401 • Ch. de Blandonnet 8
CH-1214 Vernier, Geneva
Phone: +41 22 749 01 11
Email: copyright@iso.org
Website: www.iso.org

Published in Switzerland

Documents
Document Sharing Hub
Full document details: BS ISO 5700:2025

Contents

Page

Foreword ... **v**
Introduction ... **vi**
1 Scope ... **1**
2 Normative references ... **1**
3 Terms and definitions ... **1**
4 Symbols ... **6**
5 Apparatus ... **7**
5.1 Tolerances ... 7
5.2 Horizontal loading tests ... 7
5.3 Crushing tests ... 9
6 Preparation of tractor and ROPS for testing ... **10**
7 Test procedures ... **11**
7.1 Sequence of tests ... 11
7.1.1 General ... 11
7.1.2 First longitudinal loading ... 11
7.1.3 First crushing test ... 12
7.1.4 Loading from the side ... 12
7.1.5 Second crushing test ... 12
7.1.6 Second longitudinal loading ... 12
7.2 Horizontal loading from rear, front and side ... 12
7.2.1 General requirements for horizontal loading tests ... 12
7.2.2 First longitudinal loading ... 12
7.2.3 Loading from side ... 14
7.3 Crushing tests ... 15
7.3.1 Crushing at rear ... 15
7.3.2 Crushing at front ... 18
7.4 Second longitudinal loading ... 18
8 Determination of seat index point (SIP), seat location and adjustment for test ... **18**
8.1 Seat index point ... 18
8.2 Seat location and adjustment for tests ... 18
9 Clearance zone ... **19**
9.1 Determination of the clearance zone ... 19
9.2 Determination of the clearance zone for tractors with a non-reversible seat ... 20
9.3 Determination of the clearance zone for tractors with a reversible driver's position ... 21
9.4 Optional seats ... 22
10 Acceptance conditions ... **22**
10.1 General ... 22
10.2 Clearance zone ... 22
10.3 Recording permanent deflection ... 23
10.4 Required force ... 23
10.5 Overload test ... 23
10.6 Additional conditions ... 25
10.7 Cold weather embrittlement ... 26
11 Seatbelt anchorage performance ... **26**
12 Labelling ... **26**
13 Applicability to other tractor models and future protective structure modifications ... **26**
13.1 Applicability of the structural test results to other models of tractors ... 26
13.2 Applicability of the structural test results to modified models of the protective structure ... 27

© ISO 2025 – All rights reserved

Documents
Document Sharing Hub
Full document details: BS ISO 5700:2025

14 Test report ... **27**
Annex A (informative) **Clearance zone measuring rig** ... **28**
Annex B (normative) **Optional requirements for providing resistance to brittle fracture of roll-over protective structure at reduced operating temperature** ... **30**
Annex C (normative) **Test report for roll-over protective structure** ... **32**
Bibliography ... **38**

© ISO 2025 – All rights reserved

Documents
Document Sharing Hub
Full document details: BS ISO 5700:2025

Foreword

ISO (the International Organization for Standardization) is a worldwide federation of national standards bodies (ISO member bodies). The work of preparing International Standards is normally carried out through ISO technical committees. Each member body interested in a subject for which a technical committee has been established has the right to be represented on that committee. International organizations, governmental and non-governmental, in liaison with ISO, also take part in the work. ISO collaborates closely with the International Electrotechnical Commission (IEC) on all matters of electrotechnical standardization.

The procedures used to develop this document and those intended for its further maintenance are described in the ISO/IEC Directives, Part 1. In particular, the different approval criteria needed for the different types of ISO document should be noted. This document was drafted in accordance with the editorial rules of the ISO/IEC Directives, Part 2 (see www.iso.org/directives).

ISO draws attention to the possibility that the implementation of this document may involve the use of (a) patent(s). ISO takes no position concerning the evidence, validity or applicability of any claimed patent rights in respect thereof. As of the date of publication of this document, ISO had not received notice of (a) patent(s) which may be required to implement this document. However, implementers are cautioned that this may not represent the latest information, which may be obtained from the patent database available at www.iso.org/patents. ISO shall not be held responsible for identifying any or all such patent rights.

Any trade name used in this document is information given for the convenience of users and does not constitute an endorsement.

For an explanation of the voluntary nature of standards, the meaning of ISO specific terms and expressions related to conformity assessment, as well as information about ISO's adherence to the World Trade Organization (WTO) principles in the Technical Barriers to Trade (TBT), see www.iso.org/iso/foreword.html.

This document was prepared by Technical Committee ISO/TC 23, *Tractors and machinery for agriculture and forestry*, Subcommittee SC 2, *Common tests*.

This sixth edition cancels and replaces the fifth edition (ISO 5700:2013), which has been technically revised.

The main changes are as follows:

— updated the references to the ISO 630 series;

— replaced the ASTM A370 reference with ISO 148-1;

— tolerances have been incorporated in Clause 5 and subsequent clauses have been renumbered;

— cold weather embrittlement in subclause 10.7 has been updated;

— corrected the key table for Figure 17;

— information on clearance zone measuring rig has been moved to Annex A and subsequent annexes have been relabelled;

— removed the alternative to use killed or semi-killed steel from Annex B;

— removed Annex C Designation of Maintenance Agency.

Any feedback or questions on this document should be directed to the user's national standards body. A complete listing of these bodies can be found at www.iso.org/members.html.

© ISO 2025 – All rights reserved

Documents
Document Sharing Hub
Full document details: BS ISO 5700:2025

Introduction

Testing of roll-over protective structures (ROPS) for wheeled or tracked tractors for agriculture and forestry aims at avoiding or limiting risks to the driver resulting from accidental overturning during normal operation (e.g. field work) of the tractor. The strength of the ROPS is tested by applying static loads and a static crushing test to simulate actual loads which can be imposed on the cab or frame when the tractor overturns either to the rear or to the side without free fall. The tests allow observation to be made on the strength of the structure and the attachment brackets to the tractor and also of the tractor parts that can be affected by the load imposed on the structure.

Provision is made to cover both tractors with the conventional forward-facing driver's position only, as well as those with a reversible driver's position. For tractors with a reversible driver's position, a clearance zone is defined to be combined clearance zones for the two driving positions. The point of application of the side loading is determined as the mid-point between the seat index points measured in the two positions.

It is recognized that there can be tractor designs – for example, lawn-mowers, narrow vineyard tractors, low profile tractors used in low buildings with limited overhead clearance orchards, etc., stilt tractors and certain forestry machines such as forwarders – for which this document is not appropriate.

This document specifies technical performance requirements, associated test procedures and performance test report information.

NOTE For narrow tractors, see ISO 12003-1 and ISO 12003-2.

© ISO 2025 – All rights reserved

Documents
Document Sharing Hub
Full document details: BS ISO 5700:2025

Tractors for agriculture and forestry — Roll-over protective structures — Static test method and acceptance conditions

1 Scope

This document specifies a static test method and the acceptance conditions for roll-over protective structures (cab or frame) of wheeled or tracked tractors for agriculture and forestry as described in ISO 12934:2021, 3.2.1.

It is applicable to tractors having at least two axles for wheels mounted with pneumatic tyres, or having tracks instead of wheels, with an unballasted tractor mass of not less than 600 kg and a minimum track width of the rear wheels greater than 1 150 mm. It is not applicable to tractors having a mass ratio (maximum permissible mass / reference mass) greater than 1,75.

2 Normative references

The following documents are referred to in the text in such a way that some or all of their content constitutes requirements of this document. For dated references, only the edition cited applies. For undated references, the latest edition of the referenced document (including any amendments) applies.

ISO 148-1, *Metallic materials — Charpy pendulum impact test — Part 1: Test method*

ISO 630-1, *Structural steels — Part 1: General technical delivery conditions for hot-rolled products*

ISO 630-2, *Structural steels — Part 2: Technical delivery conditions for structural steels for general purposes*

ISO 630-3, *Structural steels — Part 3: Technical delivery conditions for fine-grain structural steels*

ISO 630-4, *Structural steels — Part 4: Technical delivery conditions for high yield strength quenched and tempered structural steel plates and wide flats*

ISO 898-1, *Mechanical properties of fasteners made of carbon steel and alloy steel — Part 1: Bolts, screws and studs with specified property classes — Coarse thread and fine pitch thread*

ISO 898-2, *Fasteners — Mechanical properties of fasteners made of carbon steel and alloy steel — Part 2: Nuts with specified property classes*

ISO 3776-2, *Tractors and machinery for agriculture — Seat belts — Part 2: Anchorage strength requirements*

ISO 5353, *Earth-moving machinery, and tractors and machinery for agriculture and forestry — Seat index point*

ISO 12934, *Tractors and machinery for agriculture and forestry — Basic types — Vocabulary*

3 Terms and definitions

For the purposes of this document, the terms and definitions given in ISO 12934 and the following apply.

ISO and IEC maintain terminological databases for use in standardization at the following addresses:

— ISO Online browsing platform: available at https://www.iso.org/obp

— IEC Electropedia: available at https://www.electropedia.org/

© ISO 2025 – All rights reserved

Documents
Document Sharing Hub
Full document details: BS ISO 5700:2025

3.1
roll-over protective structure
ROPS
framework (safety cab or frame) protecting drivers of tractors for agricultural and forestry that avoids or limits risk to the driver resulting from accidental overturning during normal operation

Note 1 to entry: The ROPS is characterized by the provision of space for a clearance zone, as defined in 9.1, either inside the envelope of the structure or within a space bounded by a series of straight lines from the outer edges of the structure to any part of the tractor that might come into contact with flat ground and that is capable of supporting the tractor in that position if the tractor overturns.

3.1.1
folding ROPS
ROPS (3.1) with the capability to be stowed temporarily for special operating conditions

3.1.2
tiltable ROPS
ROPS (3.1) with the capability to be tilted in whole for service

3.2
unballasted tractor mass
mass of the tractor in working order with tanks and radiators full, roll-over protective structure with cladding, and any track equipment or additional front-wheel drive components required for normal use

Note 1 to entry: Not included are the operator, optional ballast weights, additional wheel equipment, special equipment and loads.

3.3
reference mass
m_t
mass, not less than the unballasted mass, selected by the manufacturer for calculation of the energy inputs and crushing forces to be used in the tests

Note 1 to entry: The reference mass shall not be less than the unballasted mass and must be sufficient to ensure the mass ratio does not exceed 1,75.

3.4
maximum permissible mass
technically permissible mass
maximum allowable equipment mass and allowable payload specified by the manufacturer

3.5
mass ratio
number calculated by taking the maximum permissible mass divided by reference mass

3.6
horizontal loading test
application of a horizontal load to the rear, front and side of the *roll-over protective structure* (3.1)

3.7
crushing test
application of a vertical load through a beam placed laterally across the uppermost members of the *roll-over protective structure* (3.1)

3.8
longitudinal median plane
longitudinal plane of symmetry
zero Y plane
vertical plane Y passing through the mid-points of AB, perpendicular to AB, A and B being such that

© ISO 2025 – All rights reserved

Documents
Document Sharing Hub
Full document details: BS ISO 5700:2025

— for each wheel or track of a track-laying tractor, the vertical plane passing through its axis cuts the mid-plane of the wheel or track following a line Δ which meets the supporting surface of the vehicle at one point, and

— A and B are two points thus defined which correspond to two wheels or tracks situated respectively at the two ends of the same real or imaginary axle

See Figure 1 and Figure 2.

Note 1 to entry: The mid-plane of the multiple wheels being equidistant from the vertical planes passing through the inner edge of the inner wheel and the outer edge of the outer wheel, the line Δ is, in this case, the intersection of the mid-plane of the multiple wheels and the vertical plane passing through the axis of the axle pin.

Note 2 to entry: When the longitudinal median plane is different whether the front or rear axle is used, the axle which carries the most static weight may be used to determine longitudinal median plane by convention.

© ISO 2025 – All rights reserved

Documents
Document Sharing Hub
Full document details: BS ISO 5700:2025

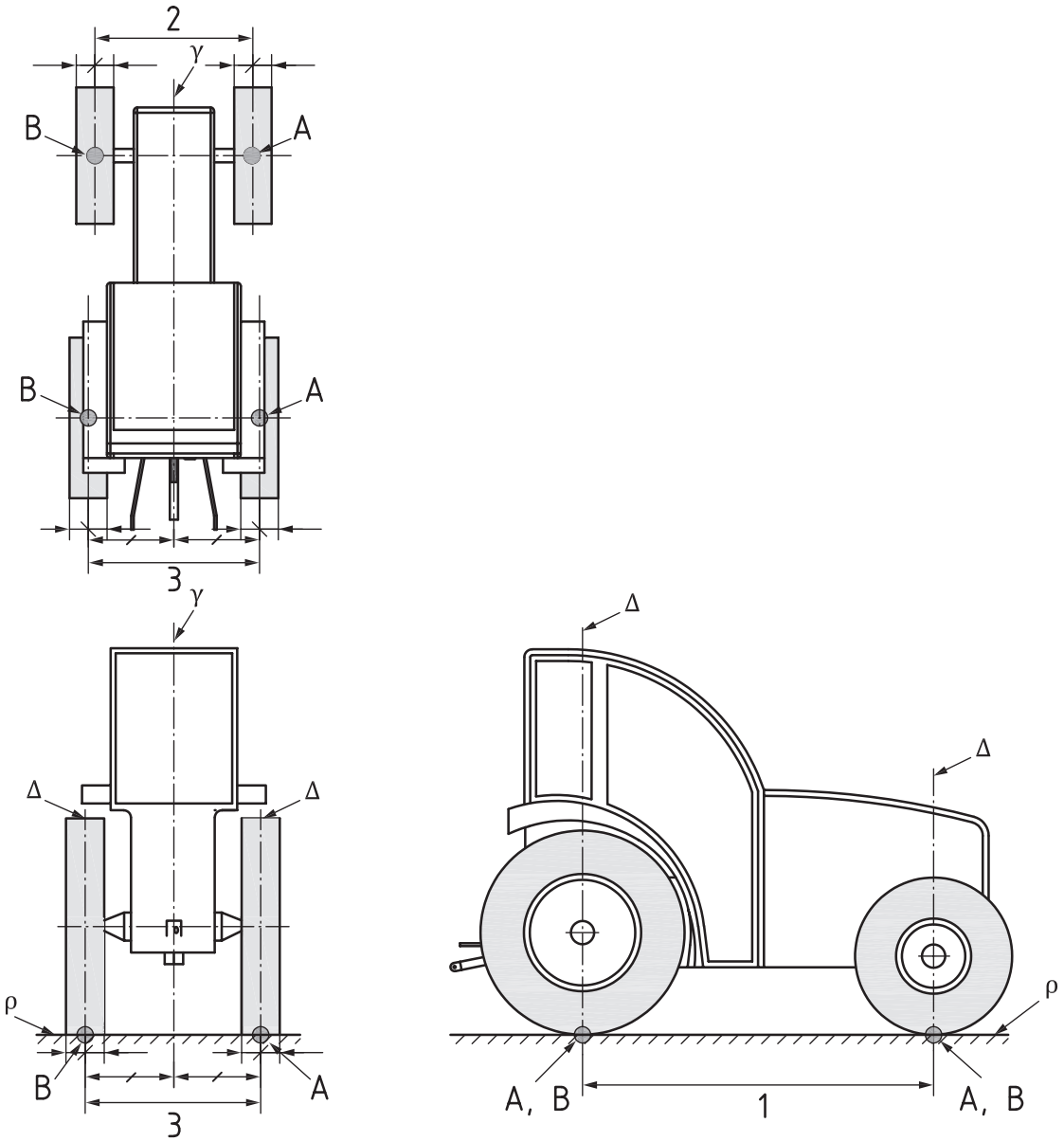

Key

1	wheelbase
2	track width (one axle)
3	track width (the axle which carries the most static weight)
ρ	supporting surface
Δ	line, vertical plane through axle and mid-plane of wheel or track belt
Υ	longitudinal median plane
A, B	point of intersection of supporting surface, vertical plane through axle and mid-plane of wheel or track belt

Figure 1 — Longitudinal median plane, track width, and wheelbase, single wheel or track

© ISO 2025 – All rights reserved

Documents
Document Sharing Hub
Full document details: BS ISO 5700:2025

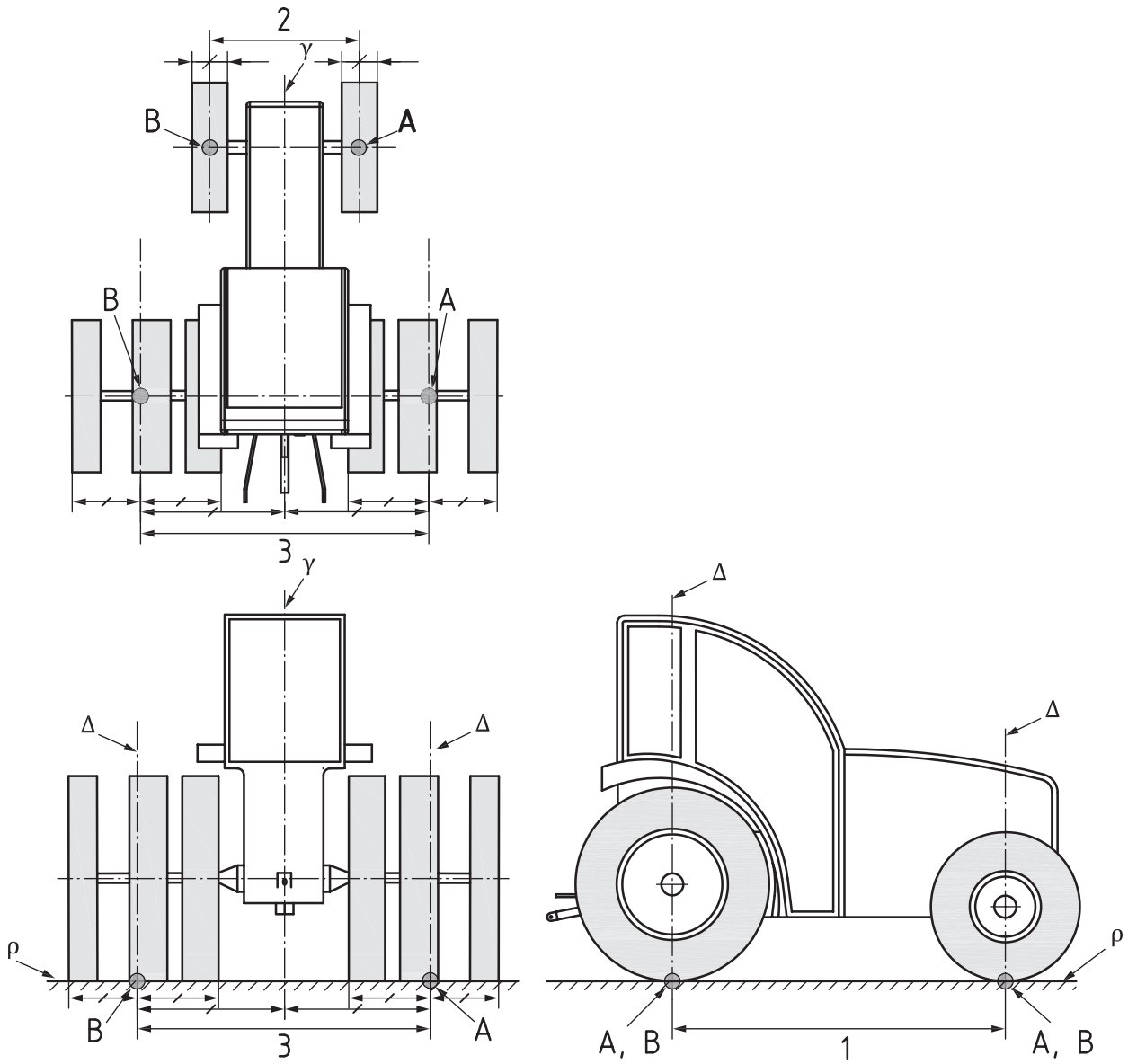

Key

1	wheelbase
2	track width (single wheels on both sides)
3	track width (multi wheels on either or both sides)
ρ	supporting surface
Δ	line, vertical plane through axle and mid-plane of wheel, track belt, or multi wheels
ϒ	longitudinal median plane
A, B	point of intersection of supporting surface, vertical plane through axle and mid-plane of wheel or track belt

Figure 2 — Longitudinal median plane, track width, and wheelbase, multiple wheels

3.9
track width
distance between the mid-planes of the wheels or tracks

Note 1 to entry: If A and B are the two points thus defined for the wheels on the same axle of the tractor, then the track width is the distance between points A and B. The track may be defined for both front and rear wheels.

Note 2 to entry: Where there are multi wheels, the track width is the distance between two planes, each of which is the mid-plane of the multi wheels.

© ISO 2025 – All rights reserved

Documents
Document Sharing Hub
Full document details: BS ISO 5700:2025

Note 3 to entry: For track-laying tractors, the track width is the distance between the mid-planes of the tracks.

3.10
vertical reference plane
plane established before any application of loading, generally longitudinal to the tractor, passing through the seat index point (SIP) and the steering-wheel centre and which is used for establishing the resultant load point in crush loading tests

Note 1 to entry: When a steering wheel does not exist, a vertical plane passing through the SIP and parallel to the longitudinal median plane of the tractor is used.

3.11
seat reference plane
vertical plane generally longitudinal to the tractor, passing through the seat index point and to the steering wheel centre and which is used for establishing the clearance zone

Note 1 to entry: This plane is established at the beginning of the series of tests and normally coincides with the longitudinal median plane of the tractor. This plane is assumed to move horizontally with the seat and steering wheel during loading but to remain perpendicular to the tractor or the floor of the ROPS if the latter is resiliently mounted. When a steering wheel does not exist, a vertical plane passing through the SIP and parallel to the longitudinal median plane of the tractor is used.

3.12
wheelbase
distance between the two lines AB, as defined in 3.8, one for the front wheels and one for the rear wheels

4 Symbols

For the purposes of this document, the symbols in Table 1 apply.

Table 1 — Symbols

Symbol	Description	Unit
α_h	Half of the horizontal seat adjustment	mm
α_v	Half of the vertical seat adjustment	mm
D	Deflection of the ROPS for the calculated basic energy required at the point of, and in line with, the load application	mm
D'	Deflection of the protective structure for the calculated energy required	mm
E_{il1}	Energy input to be absorbed during first longitudinal loading	J
E_{il2}	Energy input to be absorbed during second longitudinal loading	J
E_{is}	Energy input to be absorbed during side loading	J
F	Static load force for the basic energy required	N
F_{max}	Maximum static load force occurring during loading (excluding overload)	N
F'	Force for the calculated energy required	N
F_f	Applied force at front in the crushing test	N
F_r	Applied force at rear in the crushing test	N
m_t	Reference mass	kg
W	Width of the ROPS	mm

© ISO 2025 – All rights reserved

Documents
Document Sharing Hub
Full document details: BS ISO 5700:2025

5 Apparatus

5.1 Tolerances

Measurements during the tests shall be made to the following tolerances unless specified elsewhere:

a) time ±0,2 s;

b) distance ±0,5 %;

c) force ±1,0 % at maximum force measured;

d) mass ±0,5 %.

5.2 Horizontal loading tests

5.2.1 Material, equipment and attachment means for ensuring that the tractor chassis is firmly fixed to the ground and supported independently of the tyres.

5.2.2 Means of applying a horizontal force to the roll-over protective structure, such as are shown in Figure 3, Figure 4 and Figure 5, conforming with the requirements of 5.2.2.1 to 5.2.2.4.

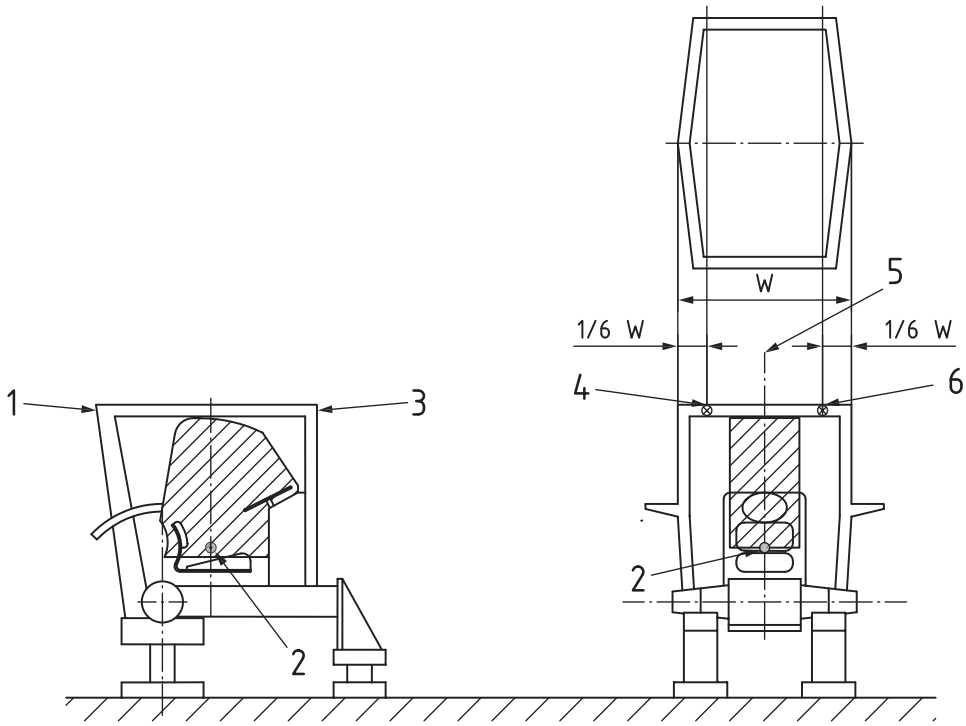

Key

1 rear load
2 seat index point
3 front load
4 second longitudinal load, front or rear
5 seat reference plane, longitudinal median plane
6 longitudinal load, rear or front

NOTE The layout illustrated is typical, but not mandatory.

Figure 3 — Front and rear load application

© ISO 2025 – All rights reserved

Documents
Document Sharing Hub
Full document details: BS ISO 5700:2025