BS ISO 6249:2021

BSI Standards Publication

Petroleum products — Determination of thermal oxidation stability of gas turbine fuels

Documents
Document Sharing Hub

Full document details: BS ISO 6249:2021

National foreword

This British Standard is the UK implementation of ISO 6249:2021.

The UK participation in its preparation was entrusted to Technical Committee PTI/2, Liquid Fuels.

A list of organizations represented on this committee can be obtained on request to its committee manager.

Contractual and legal considerations

This publication has been prepared in good faith, however no representation, warranty, assurance or undertaking (express or implied) is or will be made, and no responsibility or liability is or will be accepted by BSI in relation to the adequacy, accuracy, completeness or reasonableness of this publication. All and any such responsibility and liability is expressly disclaimed to the full extent permitted by the law.

This publication is provided as is, and is to be used at the recipient's own risk.

The recipient is advised to consider seeking professional guidance with respect to its use of this publication.

This publication is not intended to constitute a contract. Users are responsible for its correct application.

© The British Standards Institution 2021
Published by BSI Standards Limited 2021

ISBN 978 0 539 01957 5

ICS 75.160.20

Compliance with a British Standard cannot confer immunity from legal obligations.

This British Standard was published under the authority of the Standards Policy and Strategy Committee on 30 April 2021.

Amendments/corrigenda issued since publication

Date	Text affected

Documents
Document Sharing Hub

Full document details: BS ISO 6249:2021

INTERNATIONAL STANDARD

ISO 6249

Third edition
2021-04

Petroleum products — Determination of thermal oxidation stability of gas turbine fuels

Produits pétroliers — Détermination de la stabilité à l'oxydation thermique des carburéacteurs

Reference number
ISO 6249:2021(E)

Documents
Document Sharing Hub

© ISO 2021

Full document details: BS ISO 6249:2021

COPYRIGHT PROTECTED DOCUMENT

© ISO 2021

All rights reserved. Unless otherwise specified, or required in the context of its implementation, no part of this publication may be reproduced or utilized otherwise in any form or by any means, electronic or mechanical, including photocopying, or posting on the internet or an intranet, without prior written permission. Permission can be requested from either ISO at the address below or ISO's member body in the country of the requester.

ISO copyright office
CP 401 • Ch. de Blandonnet 8
CH-1214 Vernier, Geneva
Phone: +41 22 749 01 11
Email: copyright@iso.org
Website: www.iso.org

Published in Switzerland

© ISO 2021 – All rights reserved

Documents
Document Sharing Hub

Full document details: BS ISO 6249:2021

Contents

Page

Foreword ..... **iv**

1 Scope **1**

2 Normative references **1**

3 Terms and definitions **1**
3.1 Generic terms 2
3.2 Rating procedure terms 2

4 Principle **3**

5 Reagents and materials **3**

6 Apparatus **4**

7 Samples and sampling procedures **5**

8 Preparation of apparatus **5**
8.1 Cleaning and assembly of heater test section 5
8.2 Cleaning and assembly of the remainder of the test components 7

9 Calibration and standardization **7**

10 Procedure **7**
10.1 Preparation of fuel test sample 7
10.2 Final assembly 8
10.3 Power up and pressurization 8
10.4 Start up 8
10.5 Test 9
10.6 Heater tube profile 9
10.7 Shutdown 9
10.8 Disassembly 9

11 Heater tube deposit rating **10**

12 Precision **10**

13 Test report **10**

Annex A (normative) **Apparatus** **11**

Annex B (normative) **Visual rating of used heater tubes** **21**

Annex C (normative) **Interferometric method** **24**

Annex D (normative) **Ellipsometric method** **29**

Annex E (normative) **Multi-wavelength ellipsometric method** **31**

Annex F (informative) **Calibrator and thermocouple maintenance** **34**

Bibliography **35**

© ISO 2021 – All rights reserved

Documents
Document Sharing Hub

Full document details: BS ISO 6249:2021

Foreword

ISO (the International Organization for Standardization) is a worldwide federation of national standards bodies (ISO member bodies). The work of preparing International Standards is normally carried out through ISO technical committees. Each member body interested in a subject for which a technical committee has been established has the right to be represented on that committee. International organizations, governmental and non-governmental, in liaison with ISO, also take part in the work. ISO collaborates closely with the International Electrotechnical Commission (IEC) on all matters of electrotechnical standardization.

The procedures used to develop this document and those intended for its further maintenance are described in the ISO/IEC Directives, Part 1. In particular, the different approval criteria needed for the different types of ISO documents should be noted. This document was drafted in accordance with the editorial rules of the ISO/IEC Directives, Part 2 (see www.iso.org/directives).

Attention is drawn to the possibility that some of the elements of this document may be the subject of patent rights. ISO shall not be held responsible for identifying any or all such patent rights. Details of any patent rights identified during the development of the document will be in the Introduction and/or on the ISO list of patent declarations received (see www.iso.org/patents).

Any trade name used in this document is information given for the convenience of users and does not constitute an endorsement.

For an explanation of the voluntary nature of standards, the meaning of ISO specific terms and expressions related to conformity assessment, as well as information about ISO's adherence to the World Trade Organization (WTO) principles in the Technical Barriers to Trade (TBT), see www.iso.org/iso/foreword.html.

This document was prepared by Technical Committee ISO/TC 28, *Petroleum and related products, fuels and lubricants from natural or synthetic sources.*

This third edition cancels and replaces the second edition (ISO 6249:1999), which has been technically revised. The main changes compared to the previous edition are that tube ratings (Annexes C, D and E) are included.

Any feedback or questions on this document should be directed to the user's national standards body. A complete listing of these bodies can be found at www.iso.org/members.html.

© ISO 2021 – All rights reserved
Documents
Document Sharing Hub
Full document details: BS ISO 6249:2021

Petroleum products — Determination of thermal oxidation stability of gas turbine fuels

WARNING — The use of this document may involve hazardous materials, operations and equipment. This document does not purport to address all of the safety problems associated with its use. It is the responsibility of the user of this document to establish appropriate safety and health practices and determine the applicability of regulatory limitations prior to use.

1 Scope

This document specifies a procedure for rating the tendencies of gas turbine fuels to deposit decomposition products within the fuel system. It is applicable to middle distillate and wide-cut fuels and is particularly specified for the performance of aviation gas turbine fuels.

The test results are indicative of fuel thermal oxidation stability during gas turbine operation and can be used to assess the level of deposits that form when liquid fuel contacts a heated surface at a specified temperature.

This method is also applicable to aviation turbine fuel that consists of conventional and synthetic blending components as defined in the scope of for instance ASTM D7566[1] and Def Stan 91-091[2].

NOTE For the benefit of those using older instruments, non-SI-units and recalculated numbers are given in between brackets where they are more suitable.

2 Normative references

The following documents are referred to in the text in such a way that some or all of their content constitutes requirements of this document. For dated references, only the edition cited applies. For undated references, the latest edition of the referenced document (including any amendments) applies.

ISO 3170, *Petroleum liquids — Manual sampling*

ISO 3171, *Petroleum liquids — Automatic pipeline sampling*

ISO 3274, *Geometrical Product Specifications (GPS) — Surface texture: Profile method — Nominal characteristics of contact (stylus) instruments*

ISO 4288, *Geometrical Product Specifications (GPS) — Surface texture: Profile method — Rules and procedures for the assessment of surface texture*

ASTM D4306, *Practice for Aviation Fuel Sample Containers for Tests Affected by Trace Contamination*

3 Terms and definitions

For the purposes of this document, the following terms and definitions apply.

ISO and IEC maintain terminological databases for use in standardization at the following addresses:

— ISO Online browsing platform: available at https://www.iso.org/obp

— IEC Electropedia: available at http://www.electropedia.org/

© ISO 2021 – All rights reserved

Documents
Document Sharing Hub
Full document details: BS ISO 6249:2021

3.1 Generic terms

3.1.1
heater tube
aluminium tube controlled at an elevated temperature, over which the test fuel is pumped, the tube being resistively heated and temperature controlled by a thermocouple positioned inside it

Note 1 to entry: The critical test area is the 60 mm thinner portion between the shoulders of the tube. The fuel inlet to the tube is at the 0 mm position, and the fuel exit is at 60 mm.

3.1.2
decomposition product
oxidative product laid down on the *heater tube* (3.1.1) in a relatively small area of the thinner portion of the tube, typically between the 30 mm and 50 mm position from the fuel inlet, and that trapped in the test filter

3.1.3
deposit
film of oxidized product deposited on the test area of the *heater tube* (3.1.1)

3.1.4
deposit thickness
thickness of *deposit* (3.1.3) present on the heater tube substrate surface

Note 1 to entry: It is expressed in nm.

3.1.5
maximum deposit thickness
maximum thickness of an average 2,5 mm^2 *deposit* (3.1.3) present on the *heater tube* (3.1.1) surface

Note 1 to entry: It is expressed in nm.

3.1.6
deposit volume
calculated total volume of *deposit* (3.1.3), deposited on the test section of the *heater tube* (3.1.1)

Note 1 to entry: It is expressed in mm^3.

3.1.7
deposit profile
three-dimensional representation of *deposit thickness* (3.1.4) along and around the length of the heater tube test section

3.2 Rating procedure terms

3.2.1
tube rating
10-step discrete scale from 0 to >4, with intermediate levels for each number, starting with 1, described as less than the subsequent number

Note 1 to entry: The scale is taken from the five colours, 0, 1, 2, 3, 4, on the colour standard[4]. The complete scale is: 0, < 1, 1, < 2, 2, < 3, 3, < 4, 4, > 4. Each step is not necessarily of the same absolute magnitude. The higher the number, the darker the deposit rating.

3.2.2
peacock
multi-colour, rainbow-like tube deposit

Note 1 to entry: This type of deposit is caused by interference phenomena where *deposit thickness* (3.1.4) is equal to multiples of a quarter wavelength of visible light.

© ISO 2021 – All rights reserved
Documents
Document Sharing Hub
Full document details: BS ISO 6249:2021

3.2.3
abnormal
tube-deposit colour that is neither peacock nor like those of the colour standard

Note 1 to entry: It refers to deposit colours such as blues and greys that do not match the colour standard[4].

3.2.4
interferometry
technique used for measuring the optical properties of surfaces (refractive index and absorption coefficient) based on studying the pattern of interference created by their superposition

Note 1 to entry: In the presence of a thin transparent layer called film, interferometry can also be used to provide film thickness information.

3.2.5
ellipsometry
optical technique used for measuring the properties of surfaces (refractive index and absorption coefficient) based on changes in the polarized state of light upon reflection from the surface

Note 1 to entry: In the presence of a thin transparent layer, with a known refractive index and absorption coefficient, ellipsometry can also be used to provide film thickness information.

3.2.6
standard spot
mean thickness of the six thickest points in a 2,5 mm^2 area

Note 1 to entry: The mean thickness is expressed in nm.

4 Principle

This test method for measuring the high temperature stability of gas turbine fuels uses an instrument that subjects the test fuel to conditions which can be related to those occurring in gas turbine engine fuel systems. The fuel is pumped under pressure at a fixed volumetric flow rate through a heater, after which it enters a precision stainless-steel filter where fuel degradation products may become trapped. The differential pressure across this filter is continuously monitored and an excess, indicating significant deposition on the filter, will cause a premature shut-down of the apparatus before the end of the normal test period.

At the end of the test period, or after an earlier shut-down, the amount of deposit on the heater tube is rated with reference to a standard colour scale using a visual tube rater (see Annex B) or measured using interferometry or ellipsometry or multi wavelength ellipsometry (see Annexes C, D and E).

NOTE These rating procedures are based on manufacturer instructions but are further explained in ASTM D3241[5].

The final result from this rating procedure is an absolute measurement of the thickness and volume of deposit on the heater tube that provides a basis for judging the thermal oxidative stability of the fuel sample. For aircraft fuel systems performance, deposit thickness and volume are useful parameters.

5 Reagents and materials

5.1 Water, distilled or deionized water in the spent sample reservoir as required for Model 230 excluding Mk III, Mk IV and 240.

5.2 Tri-solvent, consisting of equal mix of acetone, toluene, and isopropanol as a specific solvent to clean internal (working) surface of test section only.

5.3 Cleaning solvent, methyl pentane, 2,2,4-trimethylpentane, or *n*-heptane (technical grade, 950 mmol/mol minimum purity).

© ISO 2021 – All rights reserved

Documents
Document Sharing Hub
Full document details: BS ISO 6249:2021

5.4 Drying agent. Use dry calcium sulfate + cobalt chloride granules (97 + 3 mix) or other self-indicating drying agent in the aeration dryer as applicable. This granular material changes gradually from blue to pink colour indicating absorption of water.

5.5 Filter paper, of general-purpose grade, retentive and qualitative.

NOTE Filter paper of 8 µm retention has been found satisfactory.

5.6 Membrane filter, with a diameter of approximately 25 mm, porosity of 0,45 µm and made of mixed esters of cellulose.

NOTE Type HA membrane filters[1)], have been found satisfactory.

5.7 Sparger or aeration tube, of porosity 40 µm to 60 µm, which allows an air flow rate of approximately 1,5 l/min.

NOTE The sparger is normally supplied with the apparatus. Checking using ASTM E128[3] is a possibility.

5.8 Heater tube kit, comprising aluminium heater tube conforming to the specification given in Table 1, metal test filter of porosity 17 µm and elastomer 'O' rings. Each heater tube may be marked with unique serial number that identifies the manufacturer and provides traceability to the original material batch. The heater tube has normal type and intelligent heater tube (IHT). The IHT has a chip for memorizing the data of the test result and serial number of the IHT.

Table 1 — Heater tube characteristics and requirements

Characteristics	Requirement
Metallurgy	6061-T6 Aluminium, plus the following criteria
	a) The Mg:Si ratio shall not exceed 1,9:1
	b) The Mg_2Si percentage shall not exceed 1,85 %
Dimensions	
Tube length	161,925 ± 0,254 mm
Centre section length	60,325 ± 0,051 mm
Outside diameters	
Shoulders	4,724 ± 0,025 mm
Centre section	3,175 ± 0,051 mm
Inside diameter	1,651 ± 0,051 mm
Total indicator runout, max.	0,013 mm
Mechanical surface finish, in accordance with ISO 3274 and ISO 4288 using the mean of four 1,25 measurements	(50 ± 20) nm

6 Apparatus

6.1 Aviation fuel thermal oxidation tester (FTOT), comprising of a means to pump a test portion of fuel once through the test system across the electrically heated metal heater tube and through a test filter and a means to control and measure the tube temperature, system pressure and pressure drop across the filter.

Portions of this test may be automated. Refer to the appropriate user manual for the instrument model to be used and for a description of detailed apparatus. The operator shall first become acquainted with

1) Type HA membrane filter is an example of a product supplied by Millipore. This information is given for the convenience of users of this document and does not constitute an endorsement by ISO of the product named.

© ISO 2021 – All rights reserved
Documents Document Sharing Hub
Full document details: BS ISO 6249:2021

each component and its function. Follow Annex A for a detailed description of the apparatus and the required calibration procedures.

6.2 Heater tube deposit rating apparatus, either of the tube raters (see 6.2.1 to 6.2.4) shall be used for evaluating heater tubes.

6.2.1 Visual tube rater (VTR), the tube rater described in Annex B.

6.2.2 Interferometric tube rater (ITR), the tube rater described in Annex C.

6.2.3 Ellipsometric tube rater (ETR), the tube rater described in Annex D.

6.2.4 Multi-wavelength ellipsometric tube rater (MWETR), the tuberator described in Annex E.

6.2.5 Nylon brush, to clean the heater tube section with no worn bristles.

NOTE Once the bristles of the brush wear down, they cannot effectively remove deposits/residue from the inner walls of the heater tube section.

7 Samples and sampling procedures

Unless otherwise specified, the samples shall be taken using the procedures specified in ISO 3170 or ISO 3171, with the following additional requirements:

a) Containers shall be in line with ASTM D4306.

b) Prior to sampling, all containers and their closures shall be rinsed at least three times with the fuel being sampled.

c) Samples shall be tested as soon as possible after sampling.

Test method results are known to be sensitive to trace contamination during the sampling operation and from sample containers. New (previously unused) containers are recommended, but when used containers are the only ones available, they should be thoroughly rinsed with tri-solvent (5.2), followed by cleaning solvent (5.3) and dried with a stream of air.

8 Preparation of apparatus

8.1 Cleaning and assembly of heater test section

8.1.1 Clean the inside surface of the heater test section to remove all deposits using a nylon brush (6.2.5) saturated with tri solvent (5.2).

8.1.2 Check the heater tube to be used in the test for surface defects and straightness using the following procedure.

Inspect the heater tube between 5 mm and 55 mm above the bottom shoulder using the light box (B.3.1).

If a defect (e.g. scratch, dull or unpolished area) is seen, establish its size. If it is equal to or larger than 2,5 mm^2, discard the tube.

Discard the tube, if the defect is smaller but is still visible in laboratory light.

© ISO 2021 – All rights reserved

Documents
Document Sharing Hub
Full document details: BS ISO 6249:2021

Examine the tube for straightness by rolling the tube on a flat surface and observing the gap between the flat surface and the centre-section. Reject any bent tube. While checking, ensure that the centre-part of the tube does not touch the surface.

NOTE A leveller can be used to verify straightness of the flat surface.

8.1.3 During checking of the tube and assembly of the heater section, handle the tube carefully so as not to touch the centre-part of the tube. If the centre of the heater tube is touched, reject the tube since the contaminated surface may affect the deposit-forming characteristics of the tube.

Assemble the heater section (see Figure 1) according to the manufacturer's instructions (see Figures A.1 and A.2) using the following new (previously unused) items:

a) a visually checked heater tube (see 8.1.2);

b) a test filter (installed coloured side out);

c) three O-rings.

IMPORTANT — Be aware of the shelf life of the O-rings as defined by the manufacturer.

Ensure that the insulators are undamaged and that the open end of the heater tube is upper most. In addition, ensure that the shoulder of the tube is located at the centre of the fuel discharge hole and that the clamping nuts are finger tightened.

8.1.4 Do not re-use heater tubes.

NOTE Tests indicate that the magnesium component of the aluminium-based tube metallurgy migrates to the heater-tube surface under normal test conditions. Surface magnesium can reduce adhesion of deposits to reused heater tubes.

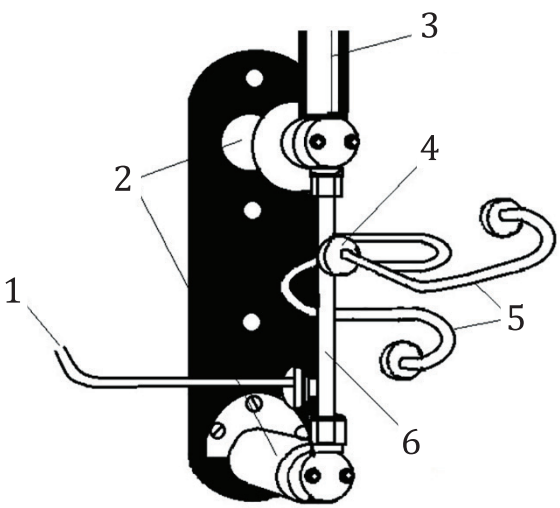

Key

1 fuel in
2 cooled bus bars
3 thermocouple
4 test filter
5 fuel out
6 heater test section

Figure 1 — Standard heater section

© ISO 2021 – All rights reserved
Documents
Document Sharing Hub
Full document details: BS ISO 6249:2021

8.2 Cleaning and assembly of the remainder of the test components

8.2.1 Perform the steps given in 8.2.2 to 8.2.6 in consecutive order, prior to running a subsequent test.

NOTE It is assumed that the apparatus has been disassembled from any previous tests (see the appropriate operating manual for assembly/disassembly details).

8.2.2 Inspect and, using the cleaning solvent (5.3), clean components that contact the test sample. Replace any seals that are faulty or suspect, especially the lip seal on the piston, and the O-rings on the reservoir cover, lines and pre-filter cover.

8.2.3 Refer to the equipment manual supplied by the manufacturer for specific cleaning procedure.

8.2.4 Install the prepared heater section (see 8.1.3).

8.2.5 Assemble pre-filter with new element and install.

8.2.6 Check the thermocouple to ensure that it is in the correct reference position and lower it into the standard operating position (see 10.2.5).

NOTE Failure to insert the thermocouple can cause over heating of the heater test section and result in damage to the equipment.

9 Calibration and standardization

9.1 Perform checks of key components at the frequencies indicated in 9.2 to 9.6 (see Annex A for details).

9.2 **Thermocouples**, calibrate a newly installed thermocouple (see A.9) and periodically thereafter after a maximum of 50 tests, or at least every 6 months.

9.3 **Differential-pressure cell**, standardize once a year or when installing a new cell (see A.8).

9.4 **Aeration dryer**, check at least monthly and change if the colour indicates absorption of water (see 5.4) or as recommended by equipment manufacturer for replacement.

9.5 **Metering pump**, perform two checks of flow rate during each test in accordance with 10.4.5 and 10.5.3.

9.6 **Filter by-pass valve (if applicable)**, check after a maximum of 50 tests, or at least every 6 months (see A.11).

10 Procedure

10.1 Preparation of fuel test sample

10.1.1 Filter minimum 600 ml of the test fuel, at a temperature between 15 °C and 32 °C through a single layer of filter paper (5.5) into the reservoir. Aerate the filtered fuel for 6 min through the sparger (5.7) at an air flow rate of 1,5 l/min.

10.1.2 Maintain temperature of sample between 15 °C and 32 °C during aeration. Put reservoir containing sample into a hot or cold water bath to change temperature, if necessary.

© ISO 2021 – All rights reserved

Documents
Document Sharing Hub
Full document details: BS ISO 6249:2021